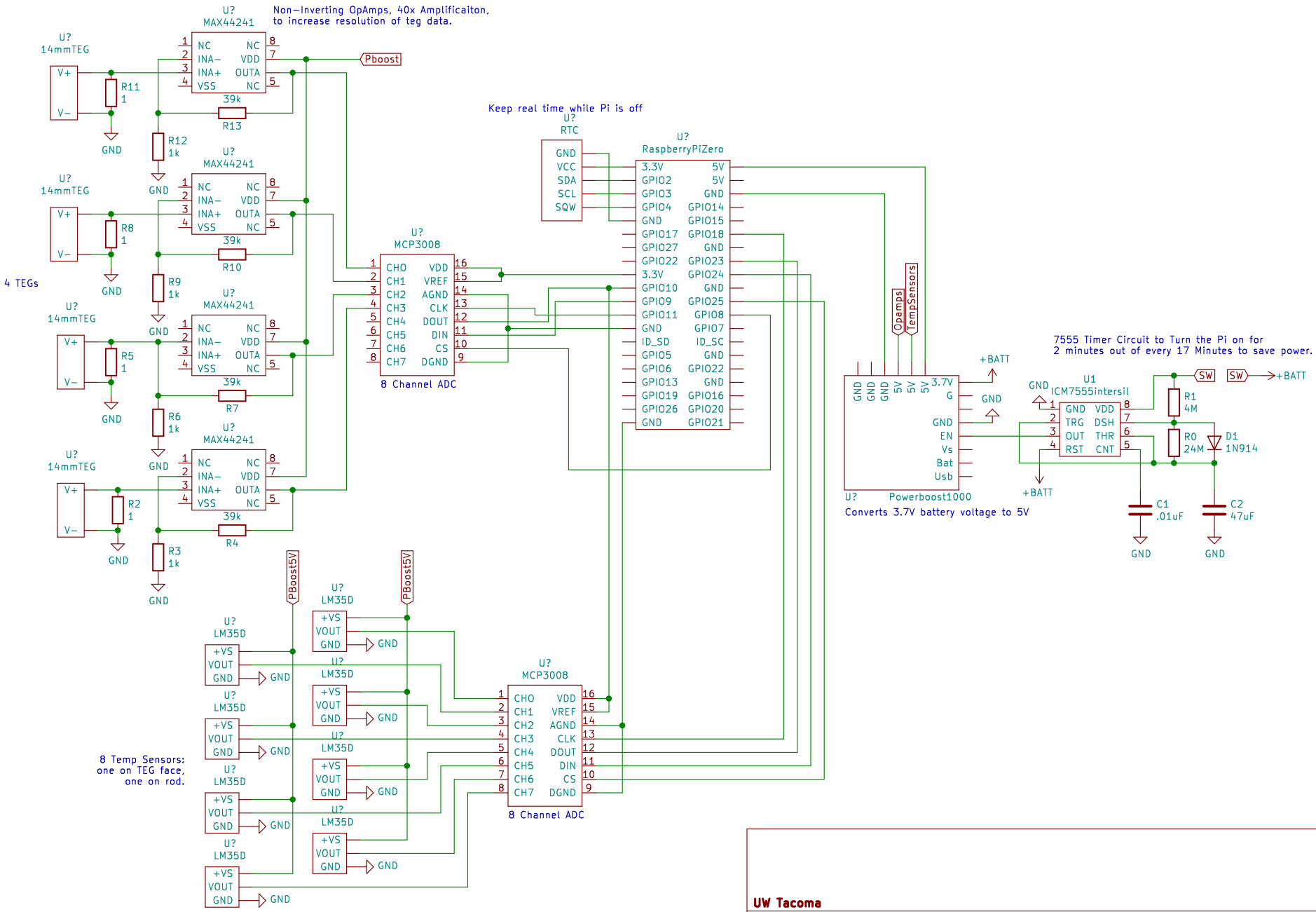
Non-Inverting OpAmps, 40x Amplificaiton,
to increase resolution of teg data.
U?
MAX44241
U?
14mmTEG
V+
V-
R11
1
R12
1k
R13
39k
R8
1
R9
1k
R10
R5
1
R6
1k
R7
R2
1
R3
1k
R4
GND
Pboost
4 TEGs
Keep real time while Pi is off
U?
RTC
GND
VCC
SDA
SCL
SQW
U?
RaspberryPiZero
U?
MCP3008
8 Channel ADC
Opamps
TempSensors
+BATT
U?
Powerboost1000
Converts 3.7V battery voltage to 5V
7555 Timer Circuit to Turn the Pi on for
2 minutes out of every 17 Minutes to save power.
U1
ICM7555intersil
SW
R1
4M
R0
24M
D1
1N914
C1
.01uF
C2
47uF
PBoost5V
U?
LM35D
+VS
VOUT
8 Temp Sensors:
one on TEG face,
one on rod.
UW Tacoma
Sheet: /
File: TreePower2.sch
Title: Tree Experiment 2
Size: User
Date: 2019-07-11
Rev: 1
KiCad E.D.A. eeschema (5.1.2)-2
Id: 1/1