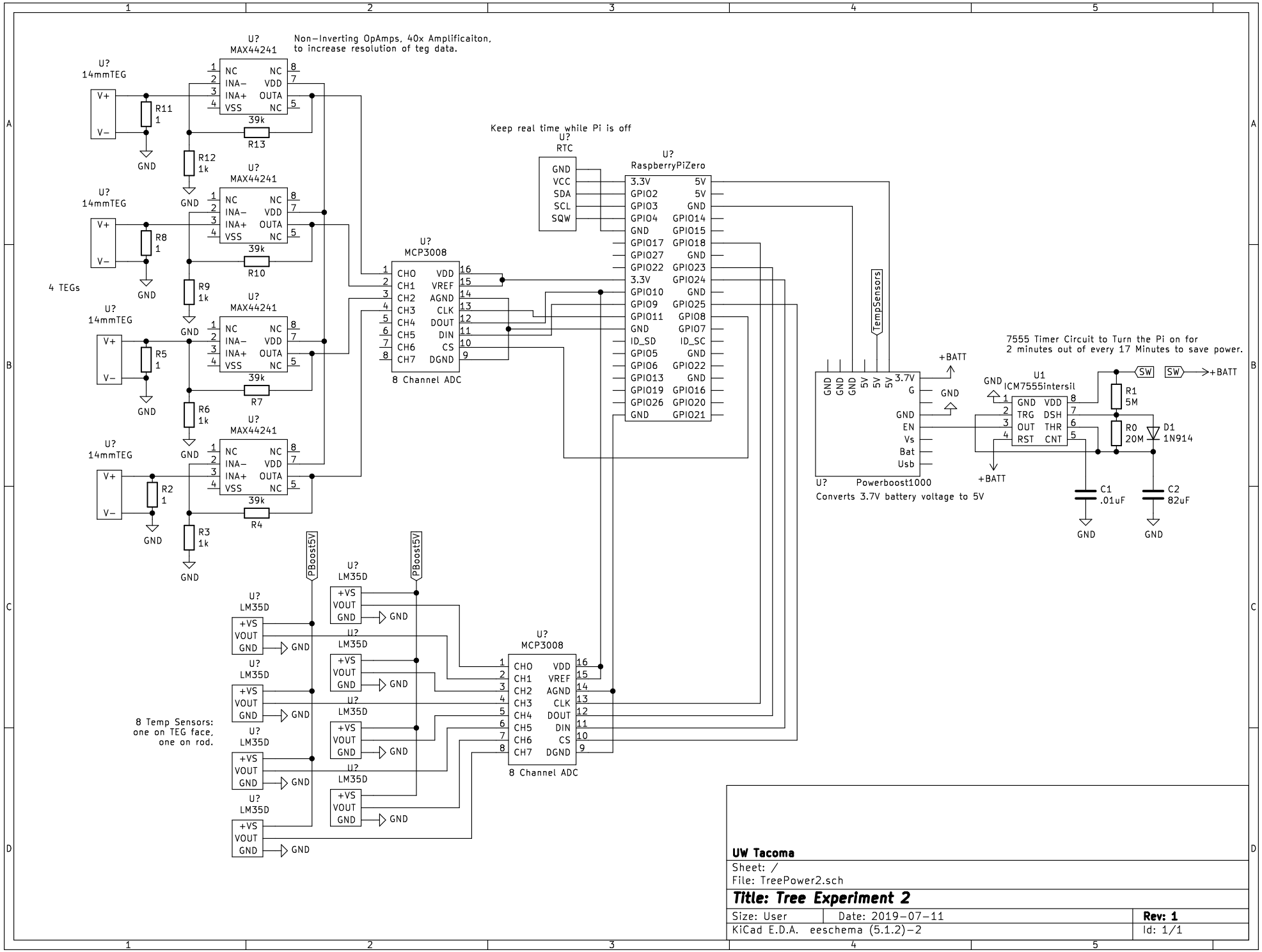

UW Tacoma

Sheet: /

File: TreePower2.sch

Title: Tree Experiment 2

Size: User	Date: 2019-07-11	**Rev: 1**
KiCad E.D.A. eeschema (5.1.2)-2		Id: 1/1