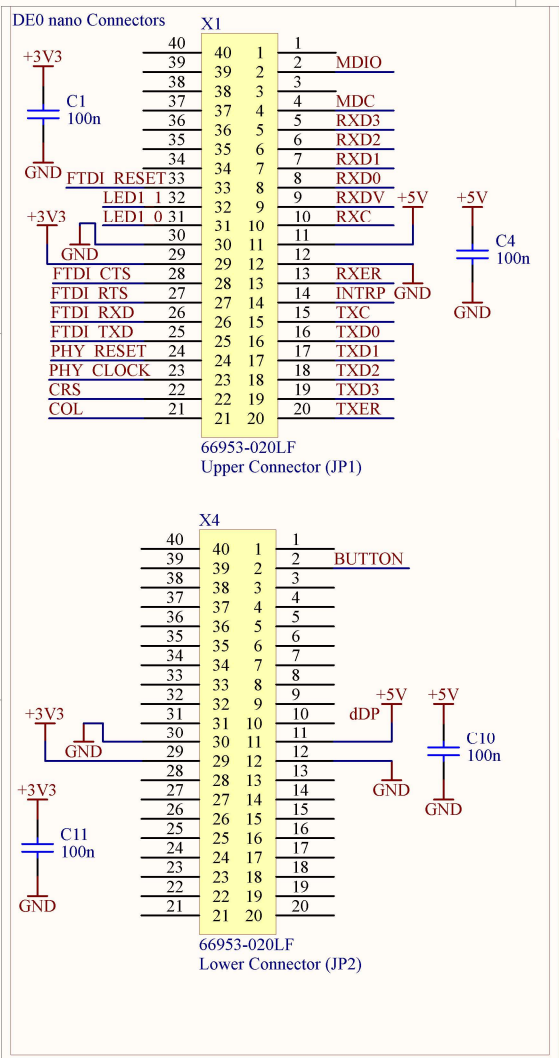

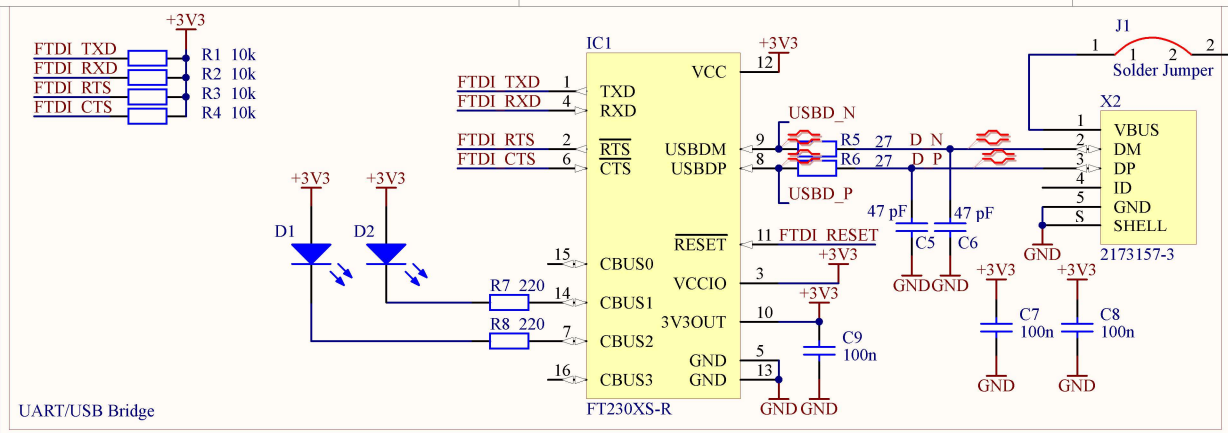

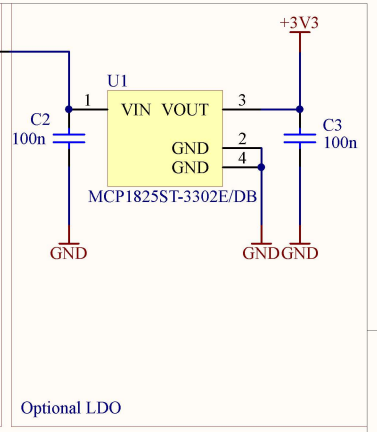

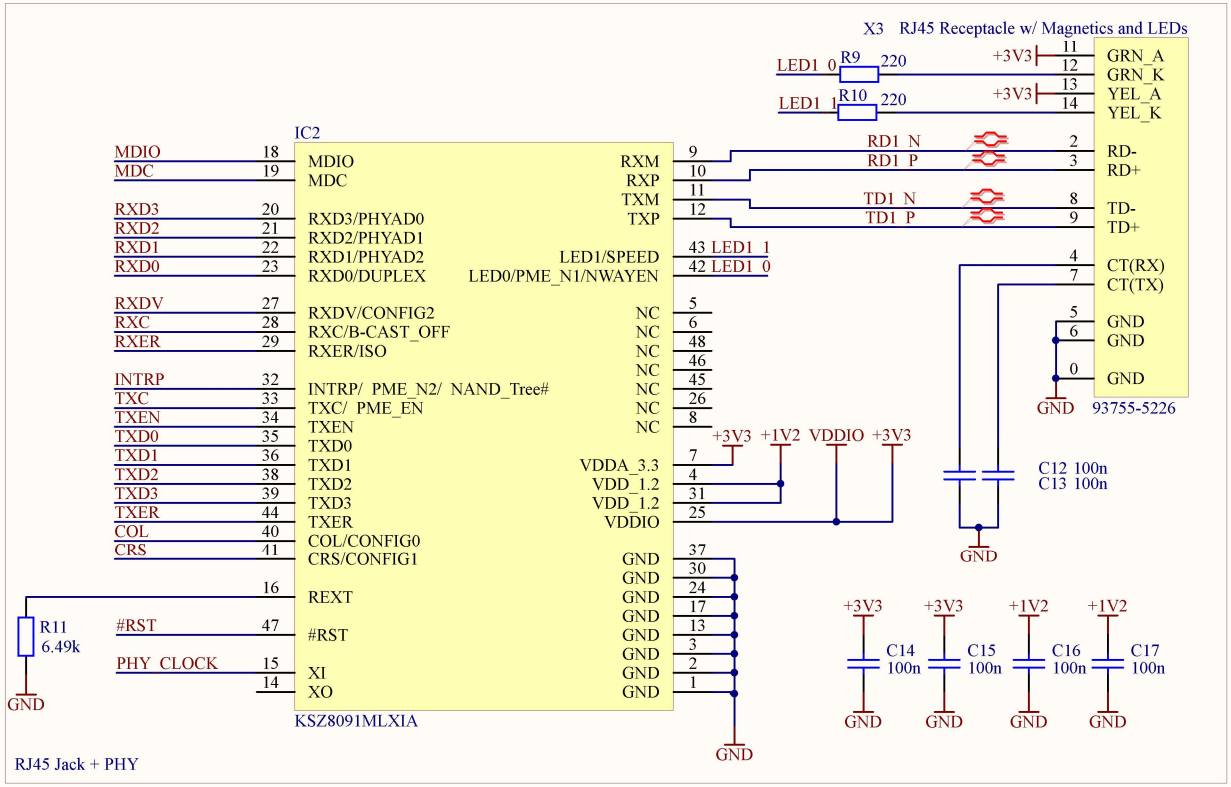

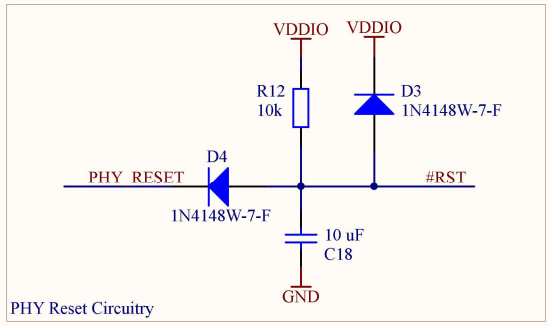

Title	EthernetDevBoard - FPGA	
Size A4	Number	Revision 0.1
Date: 26.12.2018		Sheet 1 of 2
File: ethernetDevBoard.SchDoc		Drawn By: Stefan Gloor