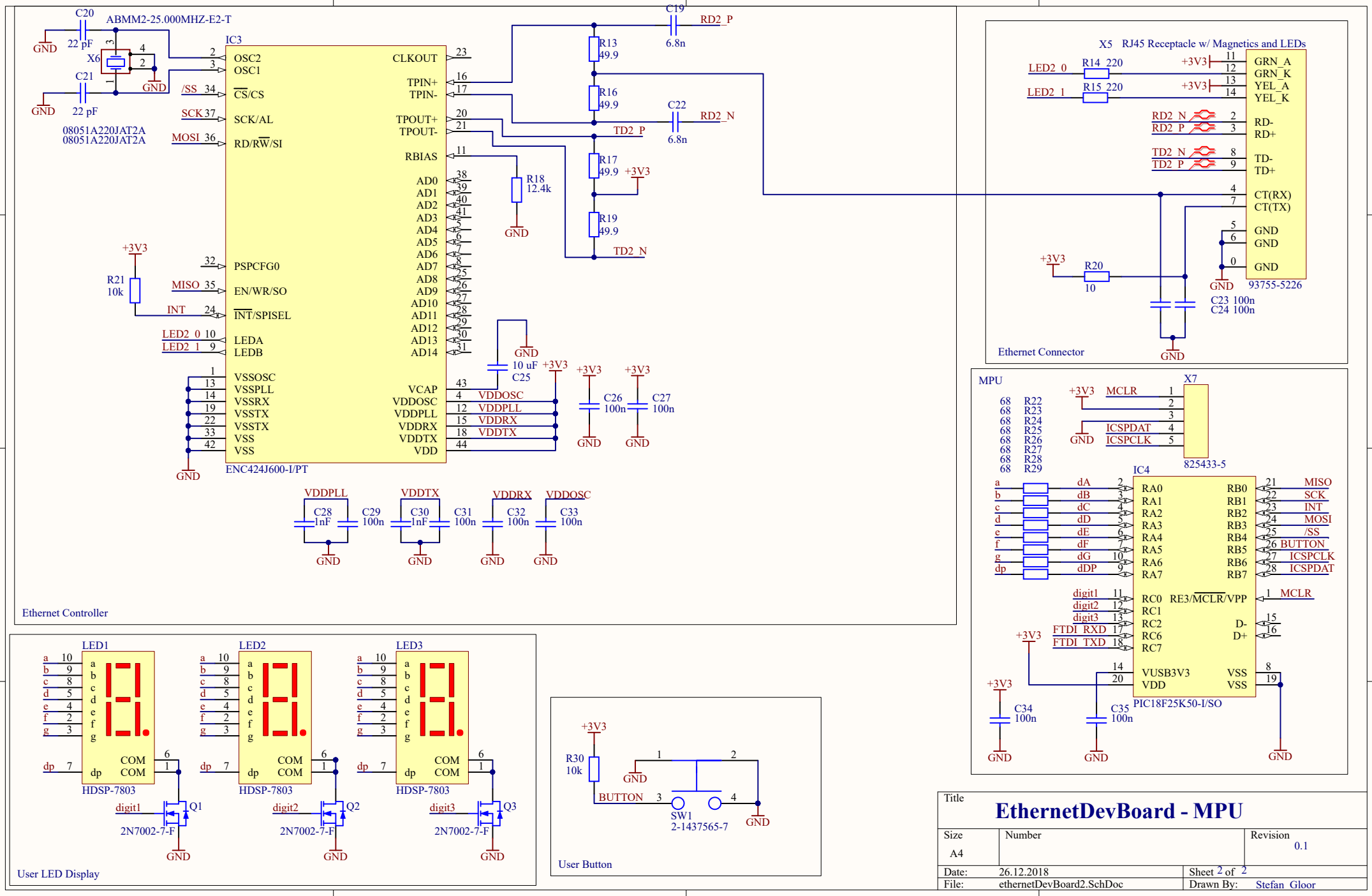
Ethernet Controller
IC3
ENC424J600-I/PT
ABMM2-25.000MHZ-E2-T
X6
C20 22 pF
C21 22 pF
08051A220JAT2A
08051A220JAT2A
OSC2
OSC1
/SS 34 CS/CS
SCK 37 SCK/AL
MOSI 36 RD/RW/SI
PSPCFG0
MISO 35 EN/WR/SO
INT 24 INT/SPISEL
LED2_0 10 LEDA
LED2_1 9 LEDB
VSSOSC
VSSPLL
VSSRX
VSSTX
VSSTX
VSS
VSS
CLKOUT
TPIN+
TPIN-
TPOUT+
TPOUT-
RBIAS
AD0
AD1
AD2
AD3
AD4
AD5
AD6
AD7
AD8
AD9
AD10
AD11
AD12
AD13
AD14
VCAP
VDDOSC
VDDPLL
VDDRX
VDDTX
VDD
R21 10k
R18 12.4k
C19 6.8n
C22 6.8n
RD2_P
RD2_N
TD2_P
TD2_N
R13 49.9
R16 49.9
R17 49.9
R19 49.9
C25 10 uF
C26 100n
C27 100n
C28 1nF
C29 100n
C30 1nF
C31 100n
C32 100n
C33 100n
GND
+3V3
VDDPLL
VDDTX
VDDRX
VDDOSC
X5 RJ45 Receptacle w/ Magnetics and LEDs
LED2_0 R14 220
LED2_1 R15 220
GRN_A
GRN_K
YEL_A
YEL_K
RD-
RD+
TD-
TD+
CT(RX)
CT(TX)
GND
93755-5226
R20 10
C23 100n
C24 100n
Ethernet Connector
MPU
R22 68
R23 68
R24 68
R25 68
R26 68
R27 68
R28 68
R29 68
X7
MCLR
ICSPDAT
ICSPCLK
825433-5
IC4
PIC18F25K50-I/SO
RA0
RA1
RA2
RA3
RA4
RA5
RA6
RA7
RB0
RB1
RB2
RB3
RB4
RB5
RB6
RB7
RC0
RC1
RC2
RC6
RC7
RE3/MCLR/VPP
VUSB3V3
VDD
VSS
VSS
D-
D+
digit1
digit2
digit3
FTDI_RXD
FTDI_TXD
MISO
SCK
INT
MOSI
/SS
BUTTON
ICSPCLK
ICSPDAT
C34 100n
C35 100n
LED1
LED2
LED3
HDSP-7803
COM
COM
dp
digit1
digit2
digit3
Q1
Q2
Q3
2N7002-7-F
User LED Display
R30 10k
BUTTON
SW1
2-1437565-7
User Button
Title
EthernetDevBoard - MPU
Size
A4
Number
Revision
0.1
Date: 26.12.2018
Sheet 2 of 2
File: ethernetDevBoard2.SchDoc
Drawn By: Stefan Gloor