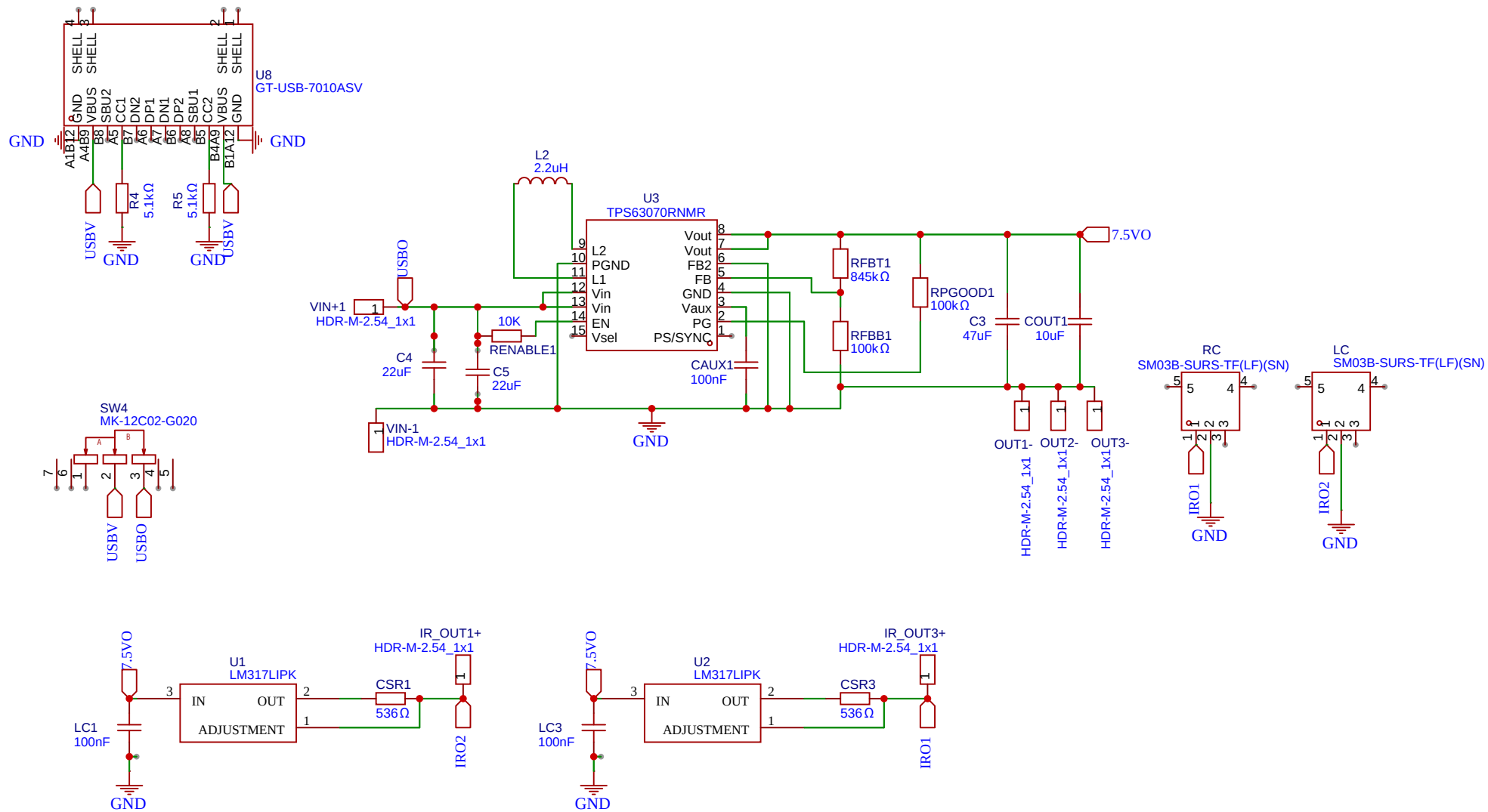

TITLE: EyeTrackVR V4 mini		REV: 1.5
	Company: EyeTrackVR	Sheet: 1/1
	Date: 2023-05-01 Drawn By: Prohurtz	