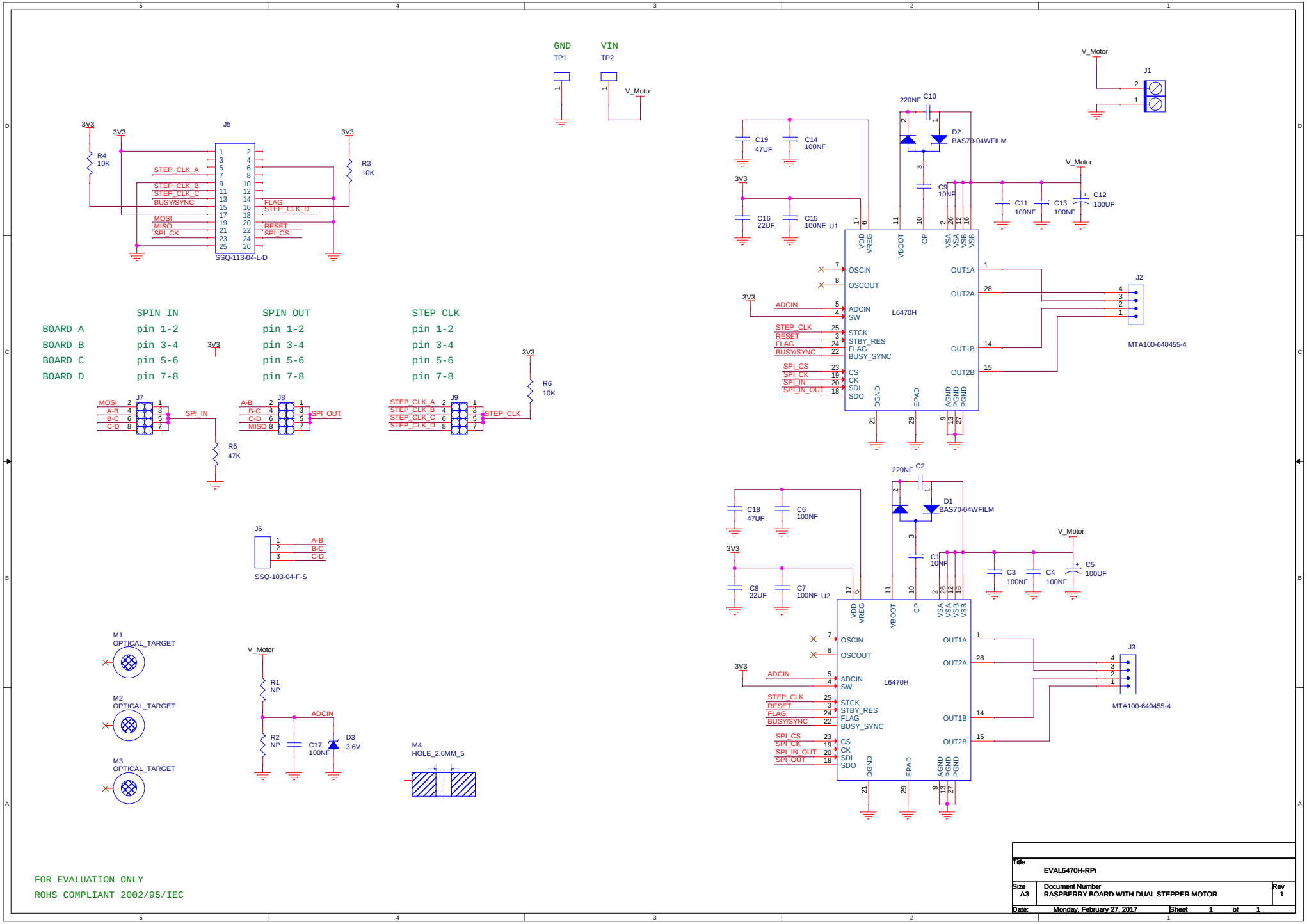

FOR EVALUATION ONLY

ROHS COMPLIANT 2002/95/IEC

Title	EVAL6470H-RPi
Size A3	Document Number: RASPBERRY BOARD WITH DUAL STEPPER MOTOR
Rev	1
Date:	Monday, February 27, 2017
Sheet	1 of 1