life.augmented

STM32WBAx Design review
DR-B26100

Customer:	[redacted]
Project:	Temperature sensor
Version (/revision):	15th. Jan. 2026
Reviewed ST component:	STM32WBA55
Reviewed by:	Miroslav Dlouhy
Date:	23.1.2026
Review version:	
Template version:	2.0

ST Restricted

Introduction

This document summarizes items which were being checked during review of a design with STM32WBA. The goal is to avoid typical problems, mistakes and apply recommend design practices.

Results in the checklist:

OK	The item is correct.
---	There is no exact result or recommendation for better results.
NOK	The item is not correct.
NA	The item is not applicable

Proposed results are the best effort. Unfortunately, not all parameters can be checked theoretically. This is typical mainly for matching networks & filters & antennas. We can check only if values are around the expected theoretical value, but the exact value must be found by measurement on the prototype.

ST Restricted

Schematic checklist

	Task	Result	Notes
1.	**STM32WBA pin assignment**		
	• Pin assignment	OK	
	• If STM32WBA6 with USB: PD6/PD7 cannot be used as GPIO	NA	
	• If STM32WBA5/STM32WBA6 with QFN package: Avoid toggling PC13 if LSE is used	OK	PC13 is not used
	• If STM32WBA5/STM32WBA6 Possible glitches on PA2 & PA7 in retention standby mode	OK	Used as USART TX; no issue
2.	**Power supply**		
	• Power range ○ 1.71V / 3.6V range ○ Power source (battery, LDO, DCDC?). Possible ripple?	OK	3.3V Battery; Ripple not expected. Bulk capacitors: C5 (47u); C8 (10u)
	• VDD ○ VDD pins connection ○ VDD pins decoupling caps (100nF for each VDD)	OK	pin11 c4 (100n) pin22 c7 (100n) pin35 c13 (100n) pin44 c10 (100n)
	• VDDA ○ VDDA pin must be connected to VDD ○ VDDA pins decoupling caps (1uF)	---	pin8 c2 (100n) recommended bulk cap 1u
	• VDDRF ○ VDDRF pin must be connected to VDD ○ VDDRF pins decoupling caps (100nF)	OK	pin40 c3 (100n)
	• VDDHPA ○ VDDHPA pin connected to 470nF decoupling cap	OK	pin38 c11 (470n)
	• VDDRFPA ○ VDDRFPA pin decoupling cap (100nF) ○ If LDO: must be connected to VDD ○ If SMPS: connect to VDD (10dBm) or VDD11 (5dBm)	OK	pin43 c12 (100n) SMPS mode; connected to VDD11
	• VDD11 ○ VDD11 pin decoupling cap (100nF)	OK	pin45 c9 (100n)
	• If STM32WBA5/STM32WBA6 in LDO: ○ 4.7uF on VCAP	NA	
	• If STM32WBA5/STM32WBA6 in SMPS: ○ VDDANA must be connected to VDD11 ○ VDDANA decoupling cap (100nF)	OK	pin39 c6 (100n) VDDANA connected to VDD11
	• If STM32WBA6 with USB: ○ VDDUSB pin decoupling cap (100nF) ○ 3V<VDDUSB<3.6V ○ Connect VDDUSB to VDD if not used	NA	
	• If STM32WBA6 with BGA121 package: ○ VDDIO2 pin connection (1.08V<VDDUSB<3.6V) ○ VDDIO2 pin decoupling cap (100nF)	NA	
	• If STM32WBA6 package with VREF+ pin: ○ VREF+ pin connection (connected to VDD or open if VREFBUF is used) ○ VREF+ pin decoupling cap (1uF)	NA	
	• Reset pin decoupling caps (100nF)	OK	Pin36 C1 (100n)
3.	**SMPS**		
	• Topology (VLXSMPS & VDD11 connections)	OK	
	• SMPS inductors & capacitor types & values	OK	Values are OK. Component types aren't known. Current ratings and SRF are not specified in BOM. 10nH inductor fitted (RF noise reduction purpose), can be removed.
	• VDDSMPS ○ VDDSMPS must be connected to VDD ○ VDDSMPS decoupling cap (10uF)	OK	pin2 c18 (10u) check a voltage derating of capacitor. C17 (1u) and L3 are only for filtering SMPS towards out from MCU
4.	**Flash / debug / certification**		
	• SWD access	OK	PA13 (pin27); PA14 (pin26)
	• PH3-BOOT0 connected to GND with 100k	OK	Connected to GND directly. No HW option to boot from external memory.
	• UART or USB access for debug certification	OK	LPUART1 (PA1/PA2)
	• MCO test point	OK	
5.	**LSE / LSI2**		

ST Restricted

	• If LSI2: PC14 & PC15 can be left open or used as IOs	NA	LSE used
	• If external LSE ○ 32kHz Xtal reference (define LSEDRV needed) ○ Load caps values	OK	2x capacitors 6.0p
6.	**HSE**		
	• 32MHz Xtal reference	OK	See details.
7.	**RF**		
	• STM32WBA matching/filtering ○ Topology ○ Component types and values	OK	Topology is a common one. If using 0dBm then 3rd order LP filter is enough to suppress harmonics. Use High-Q and low-ESR components in RF path.
	• Antenna matching ○ Component types and values	OK	Values must be selected on prototype. It can be a part of RF filter.
	• Antenna type	OK	PCB F-inverted

Schematic checklist – detailed comments

1) STM32WBA pin assignment

- **Power supply**
  - Bulk capacitor CL21A476MQYNNNE (X5R) 47uF 6.3V; capacitance reduction under DC bias at 3.3V could be in range of 60% to 80% range of the nominal capacitance ; thus the expected capacitance is approax. at 28uF.

- **SMPS**
  - GRM188C81A106MA73D (X6S) 10uF 10V; capacitance reduction under DC bias seems sufficient for 3.3V
  - GRM155R60J475ME47D (X5R) 4.7uF 6.3V; capacitance reduction under DC bias seems good. At 1.2V it could be in 60% to 85% range of the nominal capacitance
  - L3 and C17 are filtering noise from SMPS going out of the MCU. Here this makes no sense to use. You can remove.

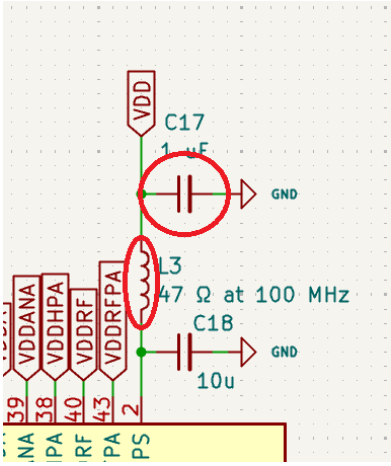

  - L2 10nH is needed in case of improvement of the noise on RF (receiver mode), you can remove if not needed.

ST Restricted

- **Flash / Debug / Certification**

- **LSE / LSI**
  - SXTF201232768D20F

ESR = 80kΩ max. ; Cl = 4pF ; C0 = 2pF max. ; Gmcrit = 0.34uA/V ; LSEDRV = 0.75uA/V

- **HSE**
  - ABM11W-32.0000MHZ-8-B1U-T3

ESR = 50Ω max. ; Cl = 8pF ; C0 = 2pF max. ; compatible according to datasheet

- **RF**
  - As the maximal RF output power is considered as 0 dBm, the RF filter can be reduced to 3 components, including input RF pin matching and antenna matching. Harmonics will be higher than in case of 5th order filter but this doesn't violate the certification.

ST Restricted

Layout checklist

	Task	Result	Notes
1.	**PCB structure**		
	• Layer assignment	OK	
2.	**Power management routing**		
	• VDDx routing structure (star connection)	OK	In L1; L2 and L3 in star connection
	• Decoupling caps positions	---	C6 100n VDDANA closer to MCU C3 100n VDDRF closer to MCU C11 470n VDDHPA closer to MCU
3.	**Grounding**		
	• Dedicated ground layer	OK	
	• If QFN package: Ground pad & vias under central pad	OK	
	• Stitching vias to interconnect GND planes	OK	
4.	**SMPS**		
	• Placement: short connections	NOK	Wrong placement of the GND in SMPS circuitry. Redesign the SMPS in order to make a common GND plane with MCU and interconnect with via.
	• Capacitors grounding	NOK	Better to redesign in order to make the GND connection more robust.
5.	**LSE**		
	• Placement: short distance lines	OK	
	• Load caps position and grounding	OK	
	• No signal under Xtal	OK	
6.	**HSE**		
	• Placement: short distance lines	OK	
	• No signal under Xtal	OK	
7.	**RF**		
	• RF line impedance (MCU to RF filter)	OK	53Ω
	• STM32WBA Matching/Filter placement	OK	
	• RF line impedance (RF filter to antenna)	OK	53Ω
	• Antenna matching placement	OK	Integrated in RF filter
	• Antenna position & clearance	---	See detail answer.
	• Vias and grounding along coplanar RF lines	OK	

Layout checklist – detailed comments

1) PCB structure

L1: routing + GND
L2: reference GND layer
L3: routing + GND
L4: routing + GND

ST Restricted

2) Power management routing

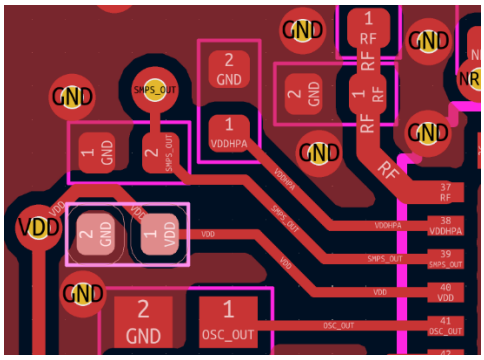

Capacitor C3 should be closer to MCU pin. Similarly, C6 on VDDANA and C11 on VDDHPA.

3) Grounding

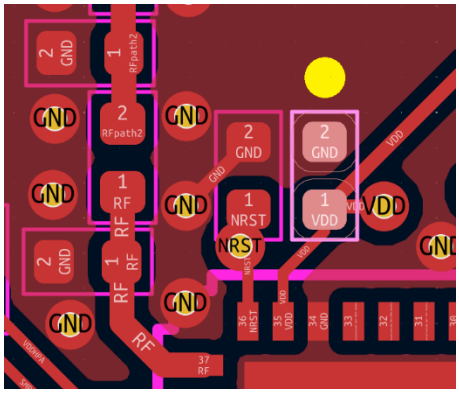

Missing nearby GND via for C13 to shorten return current path.

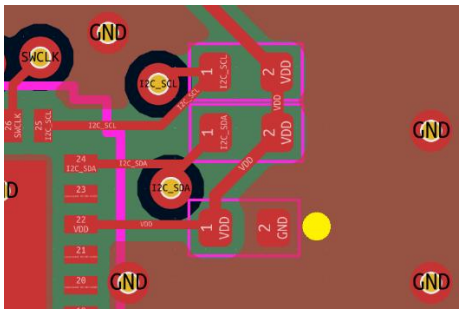

Missing nearby GND via for C7 to shorten return current path.

ST Restricted

4) SMPS

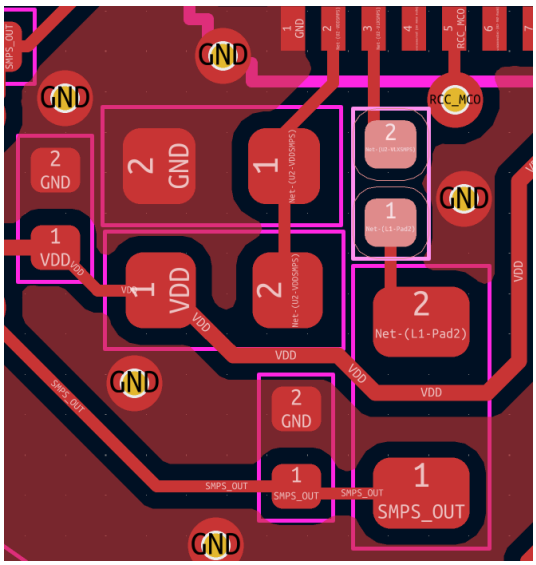

Inductor 10nH is intended to reduce RF noise in receiver. This design doesn't require that.

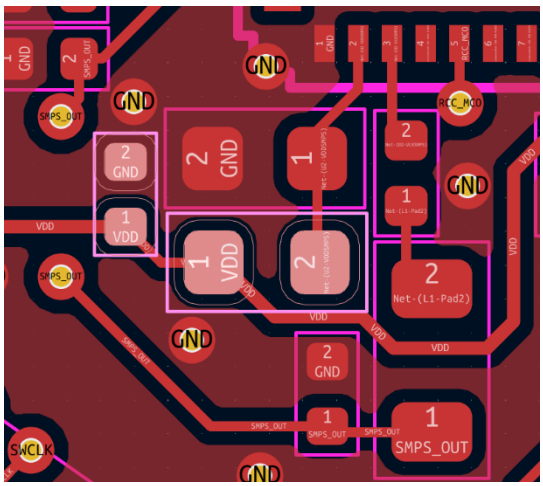

Filter on VDDSMPS is considered for reducing noise from SMPS switching to external circuits. Here this can be removed without impact.

5) LSE

6) HSE

7) RF

- Performance of antenna type (F-inverted) depends on the shape and size of the PCB. As this is circular shape and quite small PCB size, it is better to verify the antenna RF performance on sample or perform EM simulation with optimization in order to optimize it.
  The optimization would preserve the clearance area and check if the antenna is located well with enough efficiency.
- RF filter is designed for max RF output power and FCC certification which requires lower limits for harmonics. As you are considering using 0dBm, this doesn't require 5th order filter. We could try to suppress harmonics with 3rd order filter.

ST Restricted

References

[1] STM32WBA5 datasheet **DS14127**
[2] STM32WBA5 Reference Manual **RM0493**
[3] STM32WBA5 Errata sheet **ES0592**
[4] STM32WBA6 datasheet **DS14736**
[5] STM32WBA6 Reference Manual **RM0515**
[6] STM32WBA6 Errata sheet **ES0644**
[7] STM32WBA Guidelines to enable the embedded SMPS of STM32WBA series microcontroller **AN6373**
[8] STM32WBA How to develop RF hardware using STM32WBA MCUs **AN5948**
[9] Guidelines for oscillator design on STM8AF/AL/S and STM32 MCUs/MPUs **AN2867**
[10] How to calibrate the HSE clock for RF applications on STM32 wireless MCUs AN5042
[11] Wiki page How to run an RF application on the STM32WBA without LSE crystal - stm32mcu

Feedback

Please let us know your opinion about our support by filling in a short survey below:
https://www.surveymonkey.de/r/MDGRFTOMAS
We appreciate your feedback.

ST Restricted