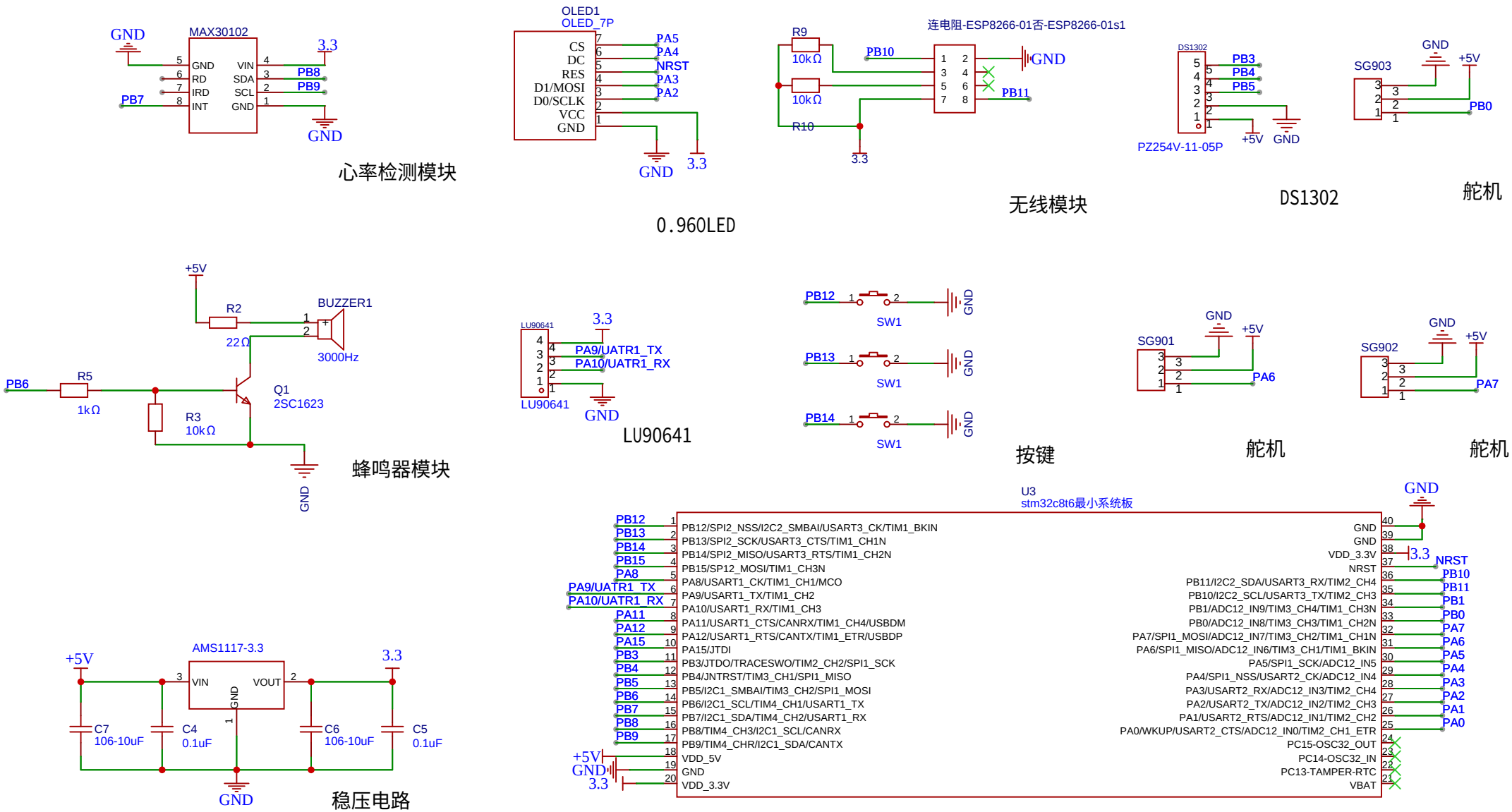

versions	v1.0		
NAME	智能药盒		
Date	2024-03	Drawn By	2024-03