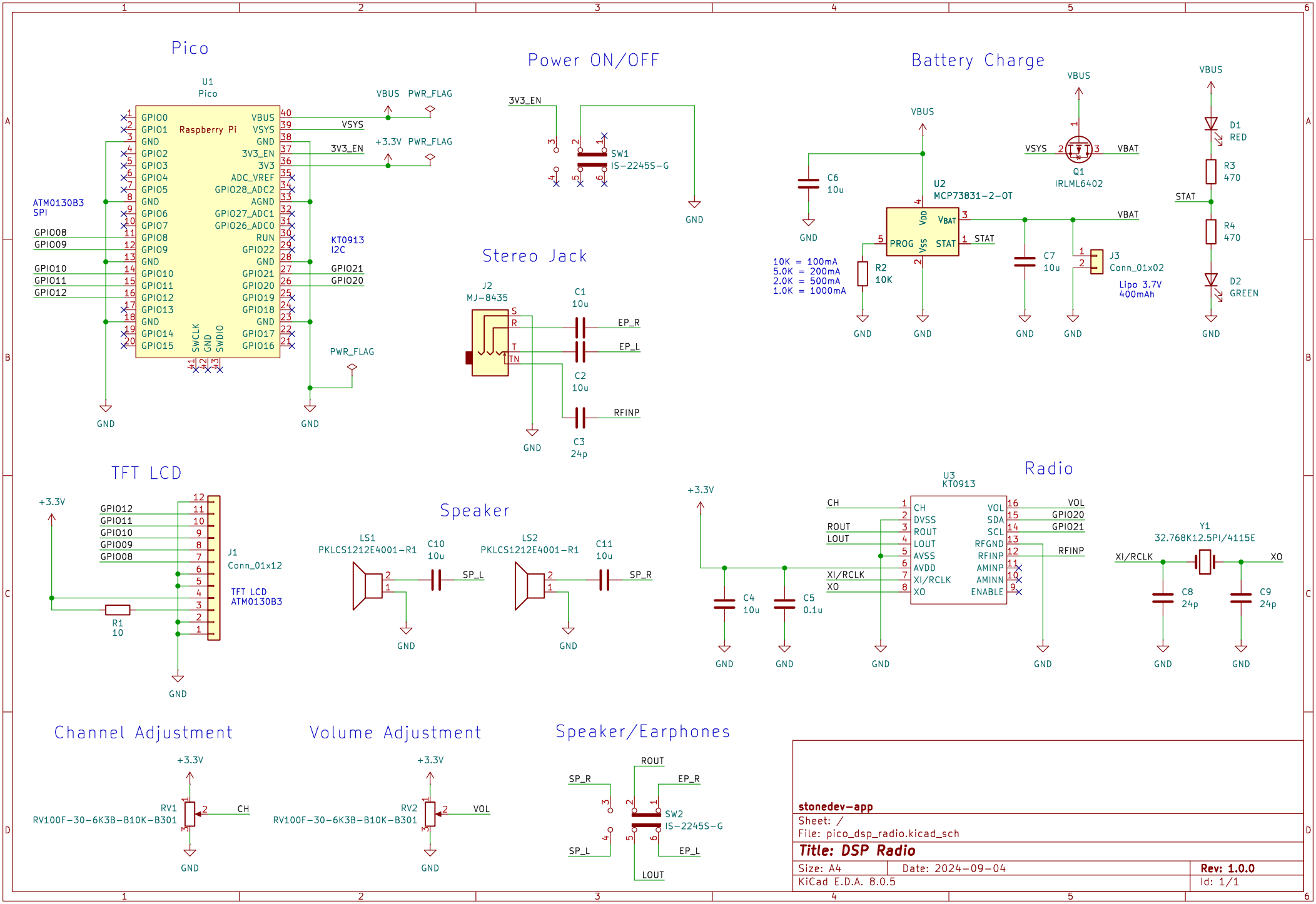

stonedev-app

Sheet: /

File: pico_dsp_radio.kicad_sch

Title: DSP Radio

Size: A4	Date: 2024-09-04	**Rev: 1.0.0**
KiCad E.D.A. 8.0.5		Id: 1/1