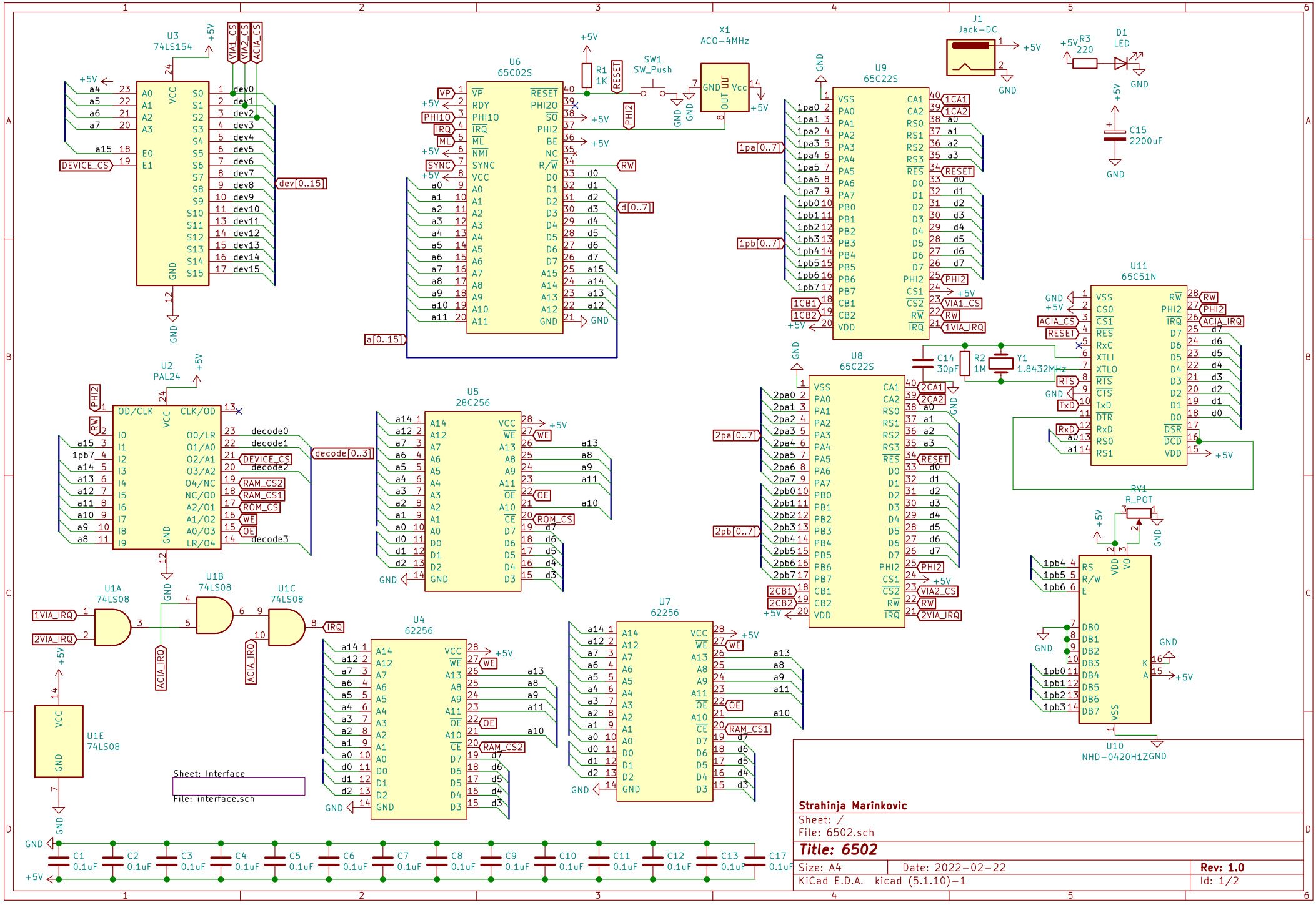
U3
74LS154
U6
65C02S
X1
ACO-4MHz
SW1
SW_Push
R1
1K
J1
Jack-DC
R3
220
D1
LED
C15
2200uF
U9
65C22S
U11
65C51N
C14
30pF
R2
1M
Y1
1.8432MHz
U2
PAL24
U5
28C256
U8
65C22S
RV1
R_POT
U1A
74LS08
U1B
74LS08
U1C
74LS08
U1E
74LS08
U4
62256
U7
62256
U10
NHD-0420H1Z
Sheet: Interface
File: interface.sch
Strahinja Marinkovic
Sheet: /
File: 6502.sch
Title: 6502
Size: A4
Date: 2022-02-22
Rev: 1.0
KiCad E.D.A. kicad (5.1.10)-1
Id: 1/2

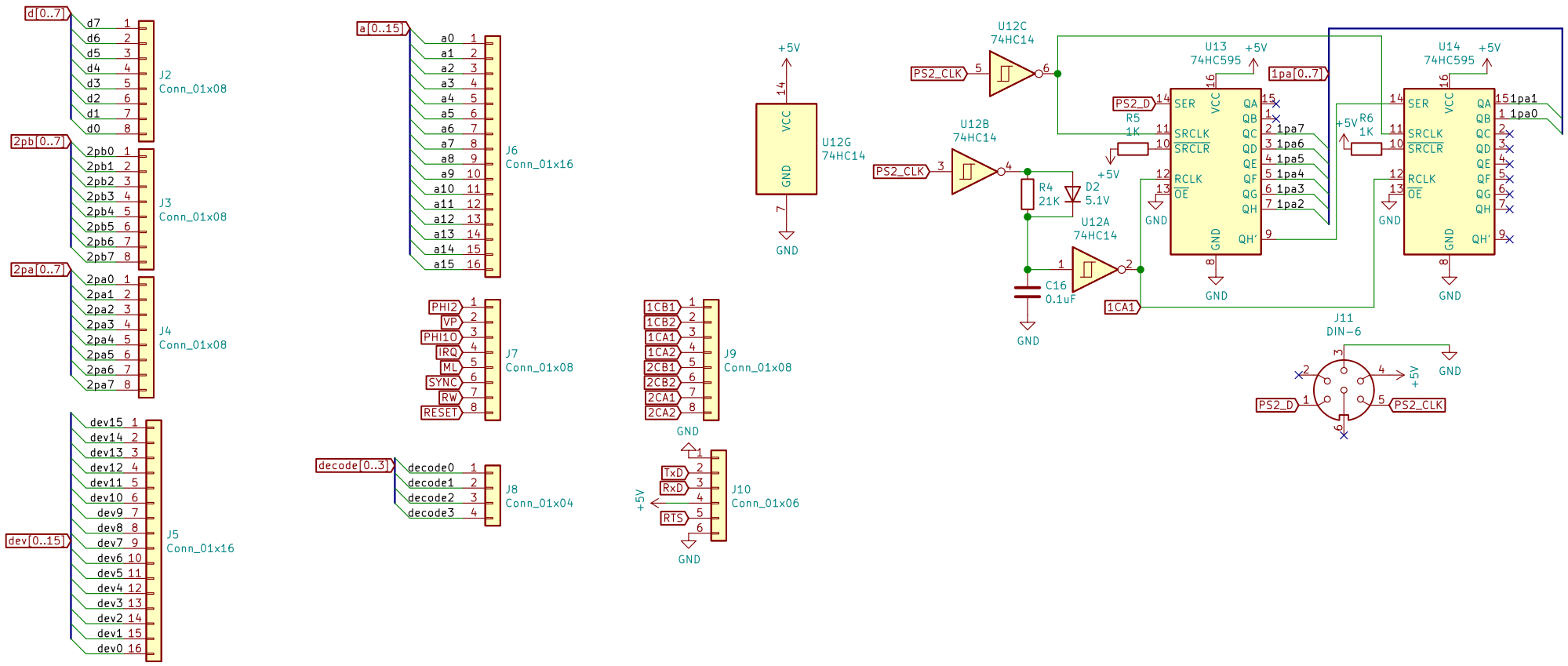

Sheet: /Interface/
File: interface.sch

Title: 6502 Interface

Size: A4	Date:	**Rev: 1.0**
KiCad E.D.A. kicad (5.1.10)-1		Id: 2/2