High-Resolution Spectroscopy of Rubidium Isotopes Using a Diode Laser

Sean Tran, Grayson Decker
Department of Physics, The University of Texas at Dallas, Richardson Texas 75080, USA
(Dated: March 2, 2026)

INTRODUCTION

The dye laser, developed in 1966, operated over a broad and continuously tunable wavelength range [1]. The tunability of the dye laser overcame a key limitation of earlier lasers: their fixed emission wavelengths. This allowed researchers to probe energy transitions in elements that lay outside of the discrete wavelengths accessible with previous lasers. However, dye lasers were not without their own limitations. The reliance on a high-power pump laser and a continuously circulating liquid dye gain medium resulted in significant costs associated with development, operation, and maintenance. As semiconductor technology continued to advance over the next few decades, a more cost-effective solution would later emerge in the form of the diode laser.

The diode laser is a semiconductor device that converts electrical energy directly into coherent light through stimulated emission [2]. Its emission wavelength is set by the band gap selected during fabrication and eliminates the need for the liquid dye system. In addition, diode lasers are relatively inexpensive to manufacture and operate. For these reasons, they have become a preferred light source for high-resolution atomic spectroscopy.

In this experiment, the absorption spectrum of the two naturally occurring isotopes of rubidium is measured by directing near-infrared light from a diode laser through a rubidium vapor cell and into a detector. Subsequently, a Michelson interferometer is used to determine the laser's frequency variation throughout the scan. This method of calibration allows for the frequency separation between absorption peaks to be determined along with the corresponding energy differences. The measured energy separations are compared with the known energy level structure of rubidium to identify the corresponding ground-state hyperfine splittings for each isotope.

EXPERIMENTAL SETUP

This experiment focuses on obtaining the absorption spectrum of two rubidium isotopes, ^{85}Rb and ^{87}Rb, using the near-infrared light (780 nm) generated by a diode laser. The laser controller is first powered on and allowed to stabilize at 50°C to ensure wavelength output power stability. Once the temperature has stabilized, the operating current is set to 50 mA, and the laser diode is switched on.

As illustrated in Fig. 1, the laser output is first attenuated to control its intensity before entering the first beam splitter. The probe beam is directed through a rubidium vapor cell positioned between a pair of two Helmholtz coils and onto a photodiode for detection. The photodiode signal is recorded on an oscilloscope as a function of frequency, producing the characteristic absorption peaks of the two rubidium isotopes. An infrared-sensitive camera positioned to the side of the rubidium vapor cell records the resonance fluorescence emitted by atoms excited by the laser, which appears on the monitor as a distinct horizontal line.

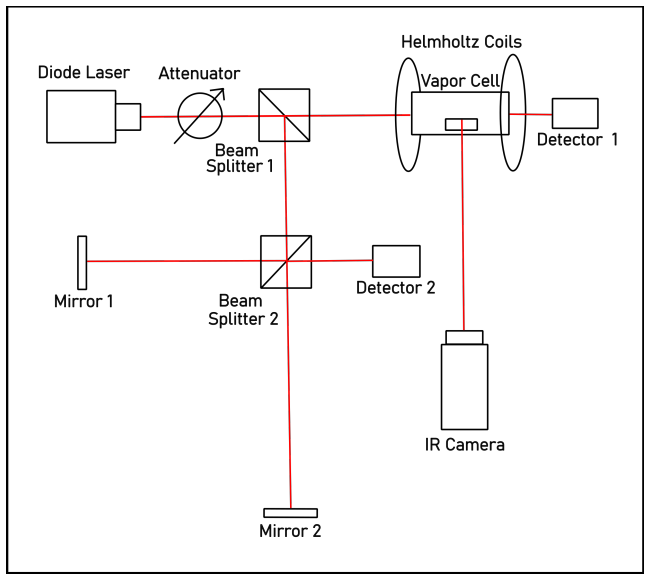

FIG. 1. Schematic of the optical setup used to obtain rubidium absorption spectrum, including the two arms of the Michelson interferometer employed for frequency calibration. Light emitted by the diode laser is shown in red.

To determine the absolute frequency separation between absorption peaks for each isotope, the relative frequency axis displayed on the oscilloscope was calibrated using a Michelson interferometer. A portion of the laser output reflected from the first beam splitter was directed into a second beam splitter, where two mirrors formed the arms of the interferometer. A second photodiode was used to detect the recombined beams from the mirrors and produce interference fringes that could be used to establish a frequency scale.

Once the proper frequency calibration was achieved, the frequency separation between absorption peaks was determined, and the corresponding energy differences of the ground-state hyperfine splittings for each isotope were calculated and compared with accepted values.

RESULTS

After confirmation that the absorption spectrum of rubidium obtained in this experiment (Fig. 2) aligned with reference data [3], the interference pattern obtained from the Michelson interferometer is then used to calibrate the frequency axis and determine the absolute frequency separation between peaks. These measured separations for ^{85}Rb and ^{87}Rb are then compared with the currently accepted ground-state hyperfine splittings of 3.04 GHz and 6.84 GHz, respectively [3]. Furthermore, results obtained from adjustments to the arm length ratio of the interferometer are compared with previous measurements, leading to the identification of a critical experimental error. Discussion of this error is presented in a later section.

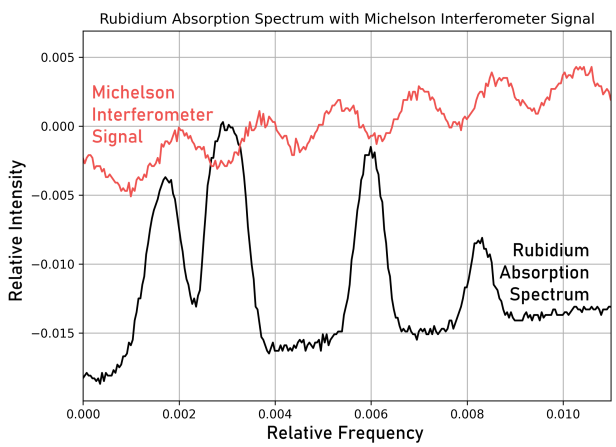

FIG. 2. The graph shows the inverted rubidium absorption spectrum (black) and the interference pattern obtained from the Michelson interferometer (red), plotted as relative intensity versus relative frequency.

Core Experiment. The interference pattern is determined by the optical path difference between the two interferometer arms of lengths L_1 and L_2:

$$\Delta L = |L_1 - L_2| \tag{1}$$

- ΔL is the path difference between arm lengths

Referring to Fig. 1, L_1 is defined as the distance from Beam Splitter 2 to Mirror 1 (0.158 m), and L_2 as the distance to Mirror 2 (0.406 m); however, the symbols L_1 and L_2 are arbitrary. For the initial experiment, the optical path difference was found to be 0.248 m. Using this value of ΔL, the absolute frequency separation corresponding to a single interferometer fringe is given by:

$$\Delta\nu = \frac{c}{2\Delta L} \tag{2}$$

- $\Delta\nu$ is the frequency separation corresponding to a single interferometer fringe

Substituting $\Delta L = 0.248$ m yields $\Delta\nu = 0.605$ GHz.

After calibrating the absolute frequency scale using the interferometer, the relative frequency separations between peaks of the rubidium absorption spectrum were determined. Comparison of the observed spectrum in Fig. 2 with the known absorption lines indicates that the peaks correspond, from left to right, to $^{87}\mathrm{Rb}_b$, $^{85}\mathrm{Rb}_b$, $^{85}\mathrm{Rb}_a$, and $^{87}\mathrm{Rb}_a$. Measured in units of relative frequency, the separation between the two central peaks associated with the ^{85}Rb isotope was 0.00308, while the separation between the two outer peaks corresponding to ^{87}Rb was 0.00660. The average relative fringe spacing of the interference pattern was found to be 0.001720, and together with $\Delta\nu$ and the measured relative peak separations for each isotope, used to determine the absolute frequency separations:

$$\Delta\nu_{\text{isotope}} = \Delta\nu \cdot \frac{\Delta x_{\text{peak}}}{\Delta x_{\text{fringe}}} \tag{3}$$

- $\Delta\nu_{\text{isotope}}$ is the absolute frequency separation between isotope absorption peaks
- $\Delta\nu$ is the frequency separation corresponding to one interferometer fringe
- Δx_{peak} is the measured peak separation in relative frequency-axis units
- Δx_{fringe} is the average fringe spacing in relative frequency-axis units

For ^{85}Rb and ^{87}Rb, the measured hyperfine splitting was:

$$\Delta\nu_{85} = 1.08 \text{ GHz}$$
$$\Delta\nu_{87} = 2.32 \text{ GHz}$$

with an observed ratio of

$$R_{obs} = \frac{\Delta\nu_{87}}{\Delta\nu_{85}} = 2.15$$

yielding a percent error of 4.4% from the expected ratio of 2.25. The measured hyperfine splittings are approximately a factor of three smaller than the expected values of 3.04 GHz (^{85}Rb) and 6.84 GHz (^{87}Rb).

Above and Beyond. The experiment was repeated with an adjustment made to one arm of the interferometer. Specifically, L_1 was shortened from 0.158 m to 0.090 m, while L_2 was kept constant at 0.406 m, yielding an optical path difference of $\Delta L = 0.316$ m. Using Eq. (2), the absolute frequency separation per fringe was found to be $\Delta\nu = 0.475$ GHz.

Substituting $\Delta\nu$, along with the average fringe spacing $\Delta x_{\text{fringe}} = 0.00895$ into Eq. (3) yields the measured hyperfine splittings:

$$\Delta\nu_{85} = 0.163 \text{ GHz}$$
$$\Delta\nu_{87} = 0.350 \text{ GHz}$$

with an observed ratio of $R_{\text{obs}} = 2.15$, an error of 4.4% from the expected ratio of 2.25. The measured hyperfine splittings are approximately a factor of twenty smaller than the expected values.

ERROR ANALYSIS

Although the ratio of measured hyperfine splittings for the **Core Experiment** (Exp 1) and the **Above and Beyond** configuration (Exp 2) was within 4.4% of the expected value in both cases, the absolute splittings were significantly different, being smaller than accepted values by approximately a factor of three in Exp 1 and a factor of twenty in Exp 2.

	L_1	L_2	ΔL	Δx_{fringe}	$\Delta\nu$	$\Delta\nu_{85}$	$\Delta\nu_{87}$
Exp 1	0.158	0.406	0.248	0.00172	0.605	1.08	2.32
Exp 2	0.090	0.406	0.316	0.00895	0.475	0.163	0.350

TABLE I. Experimental values for Core Experiment (1) and Above and Beyond (2). Distances L_1, L_2, ΔL are given in meters. Average fringe spacing Δx_{fringe} is reported in relative frequency-axis units. Frequencies $\Delta\nu$, $\Delta\nu_{85}$, $\Delta\nu_{87}$ are in GHz. The final results, $\Delta\nu_{85}$ and $\Delta\nu_{87}$, are bolded for clarity.

During the experiment, it was observed that obstruction of the path between Beam Splitter 2 and Mirror 2 did not alter the interference pattern. This indicated a critical experimental error: the observed interference pattern was not produced by the two arms, L_1 and L_2, of the Michelson interferometer. As a result, the calculated optical path difference ΔL, and consequently $\Delta\nu$, do not represent the true path difference of the system. Instead, the effective length L_2' corresponds to the distance between Beam Splitter 2 and Detector 2 (0.146 m).

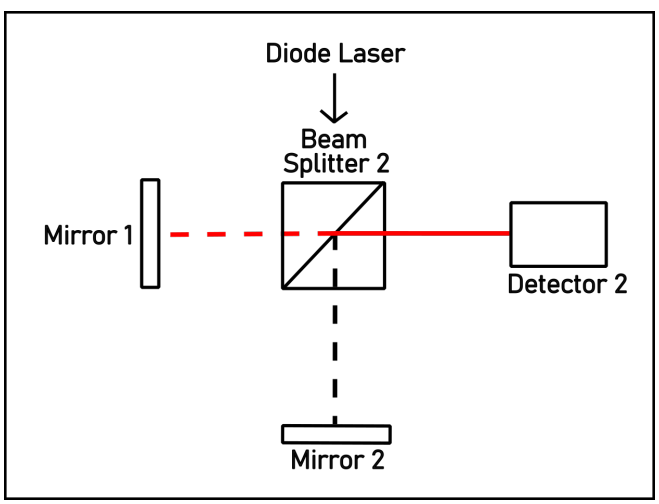

FIG. 3. Schematic of the Michelson interferometer optical setup (Not to scale). The arrow indicates the propagation direction of the diode laser beam. The dashed lines indicate the intended interferometer arms, while the red path denotes the actual optical paths producing the observed interference.

Since the previous expression for ΔL in Eq. (1) accounted for the round-trip distance to the mirror in each arm, it required modification to determine the correct path differences using the corrected value of L_2'. Accounting for the one-way propagation distance of L_2', the corrected optical path difference between L_1 and the revised L_2' is given by:

$$\Delta L' = |L_1 - \frac{L_2'}{2}| \tag{4}$$

- $\Delta L'$ is the corrected optical path difference
- L_2' is the revised effective length of the second arm

The corrected path differences for Exp and Exp 2 are:

$$\Delta L'^{(1)} = |0.158 - \frac{0.146}{2}| = 0.085 \text{ m}$$
$$\Delta L'^{(2)} = |0.090 - \frac{0.146}{2}| = 0.017 \text{ m}$$

Substituting $\Delta L'$ into Eq. (2) yields the corresponding frequency separation per fringe:

$$\Delta\nu'^{(1)} = \frac{3.00 \times 10^8}{2(0.085)} = 1.76 \text{ GHz}$$
$$\Delta\nu'^{(2)} = \frac{3.00 \times 10^8}{2(0.017)} = 8.82 \text{ GHz}$$

A final substitution into Eq. (3) yields the hyperfine splittings for each isotope, which are compared with the accepted values of 3.04 GHz (^{85}Rb) and 6.84 GHz (^{87}Rb).

Exp 1:

$$\Delta\nu_{85}'^{(1)} = 1.76 \cdot \frac{0.00308}{0.00172} = 3.16 \text{ GHz}$$
$$\Delta\nu_{87}'^{(1)} = 1.76 \cdot \frac{0.00660}{0.00172} = 6.77 \text{ GHz}$$

The percent errors were 3.8% for ^{85}Rb and 1.1% for ^{87}Rb, both within approximately 4%.

Exp 2:

$$\Delta\nu_{85}'^{(2)} = 8.82 \cdot \frac{0.00308}{0.00895} = 3.03 \text{ GHz}$$
$$\Delta\nu_{87}'^{(2)} = 8.82 \cdot \frac{0.00660}{0.00895} = 6.51 \text{ GHz}$$

The percent errors were 0.4% for ^{85}Rb and 4.9% for ^{87}Rb, both within approximately 5%.

	Accepted	Exp 1		Exp 2	
Isotope	(GHz)	(GHz)	Error (%)	(GHz)	Error (%)
^{85}Rb	3.04	3.16	3.8	3.03	0.4
^{87}Rb	6.84	6.77	1.1	6.51	4.9

TABLE II. Corrected hyperfine splittings for Exp 1 and Exp 2, compared to accepted values.

After correcting the optical path length of the interferometer, the measured hyperfine splittings for both isotopes were found to be within 5% of the accepted values in both experiments. These results indicate that the discrepancy in the initial analysis was due to a systematic error in the configuration of the optical setup.

CONCLUSIONS

The results of this experiment demonstrate that a diode laser, when calibrated using a Michelson interferometer, is an effective tool for probing the ground-state hyperfine splittings of the isotopes ^{85}Rb (3.04 GHz) and ^{87}Rb (6.84 GHz). In the Core Experiment (Exp 1), the corrected splittings of 3.16 GHz and 6.77 GHz agreed with accepted values within 4%. In the Above and Beyond configuration (Exp 2), the corrected hyperfine splittings of 3.03 GHz and 6.51 GHz similarly agreed within 5% after adjustment of the interferometer setup.

A critical source of error arose from an incorrect calibration of the Michelson interferometer, leading to interference from an unintended optical path at the detector. This resulted in a miscalculation of the true path difference and, consequently, hyperfine splitting values that differed by up to a factor of twenty from the accepted values, as observed in Exp 2. This issue was resolved by correctly identifying the effective interferometer arms and recalculating the optical path difference accordingly. Mitigation of this error in future implementations may be achieved by slightly adjusting the angle of the beam splitter to prevent any unintended reflections from recombining at the detector.

After correcting the systematic error arising from the interferometer configuration, the ground-state hyperfine splittings of ^{85}Rb and ^{87}Rb were determined from experimental measurements and found to be in close agreement with accepted values. These results demonstrate that a diode laser calibrated using a Michelson interferometer is an effective tool for probing atomic hyperfine splittings.

AUTHOR CONTRIBUTIONS

S.T. wrote the introduction, S.T. and G.D. wrote the experimental setup, S.T. wrote the results and error analysis, S.T. wrote the conclusion, S.T. formatted the final report.

REFERENCES

[1] Duarte, F. J. (2012). *Tunable organic dye lasers: Physics and technology of high-performance liquid and solid-state narrow-linewidth oscillators.* Progress in Quantum Electronics, 36(1), 29–50. https://doi.org/10.1016/j.pquantelec.2012.03.002

[2] Nasim, H., & Jamil, Y. (2014). *Diode lasers: From laboratory to industry.* Optics & Laser Technology, 56, 211–222. https://doi.org/10.1016/j.optlastec.2013.08.012

[3] Bucci, T. J., Feigert, J., Crescimanno, M., Chamberlain, B., & Giovannone, A. (2021). *Rubidium isotope shift measurement using noisy lasers.* American Journal of Physics, 89(7), 730–738. https://doi.org/10.1119/10.0003540