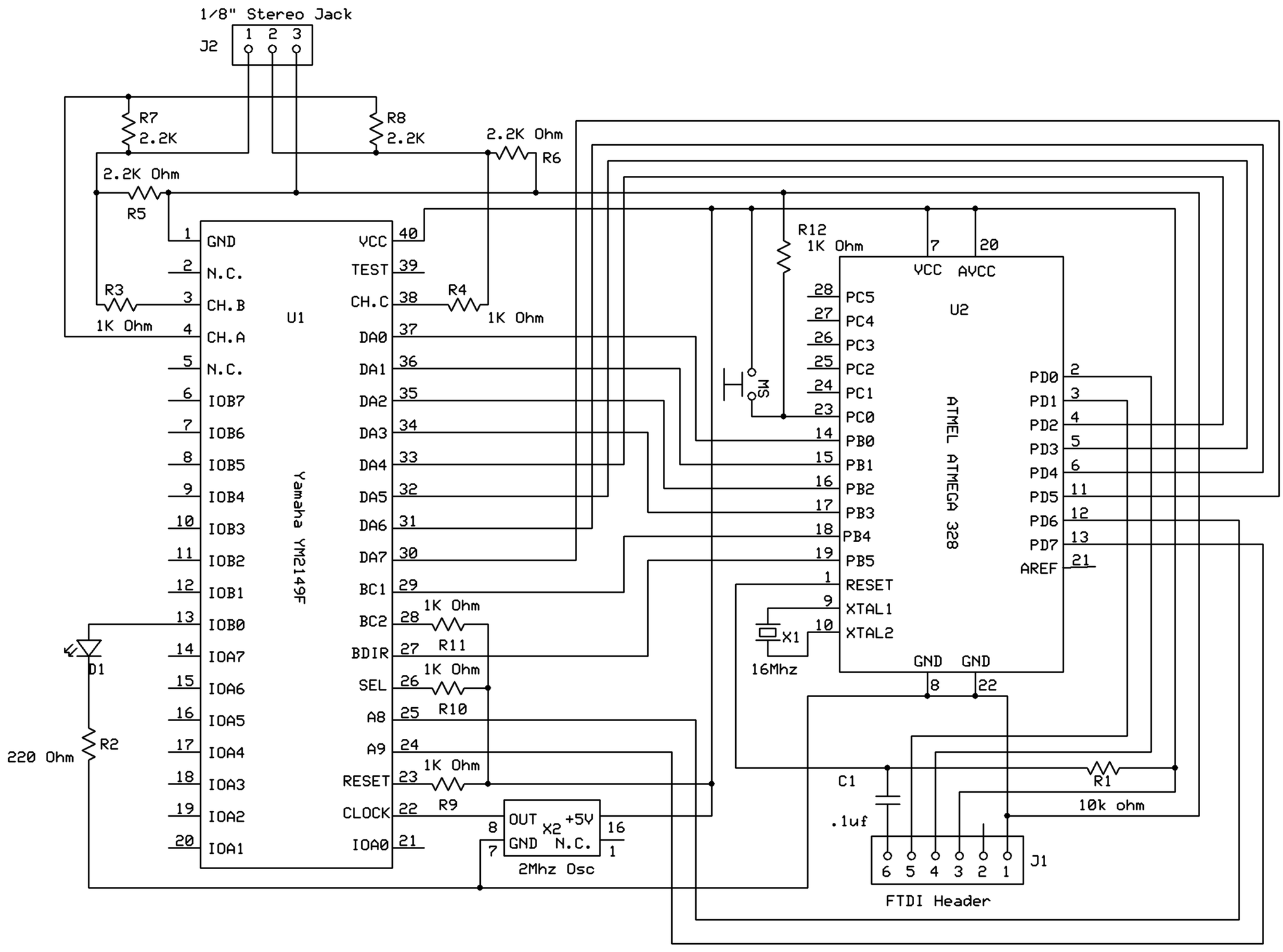

www.straytechnologies.com

YM_mini V1

Wil Lindsay	rev 1 2/23/2010	1 of 1