THIS DOCUMENT AND THE DATA DISCLOSED HEREIN OR HEREWITH IS THE PROPERTY OF ALTIUM LIMITED AND MAY BE FREELY DISTRIBUTED IN WHOLE. NO RIGHTS ARE RESERVED OR EXPRESS OR IMPLIED WARANTEE GIVEN.

REVISION	DESCRIPTION	DATE	APPROVED

PWM to Voltage Level Conversion

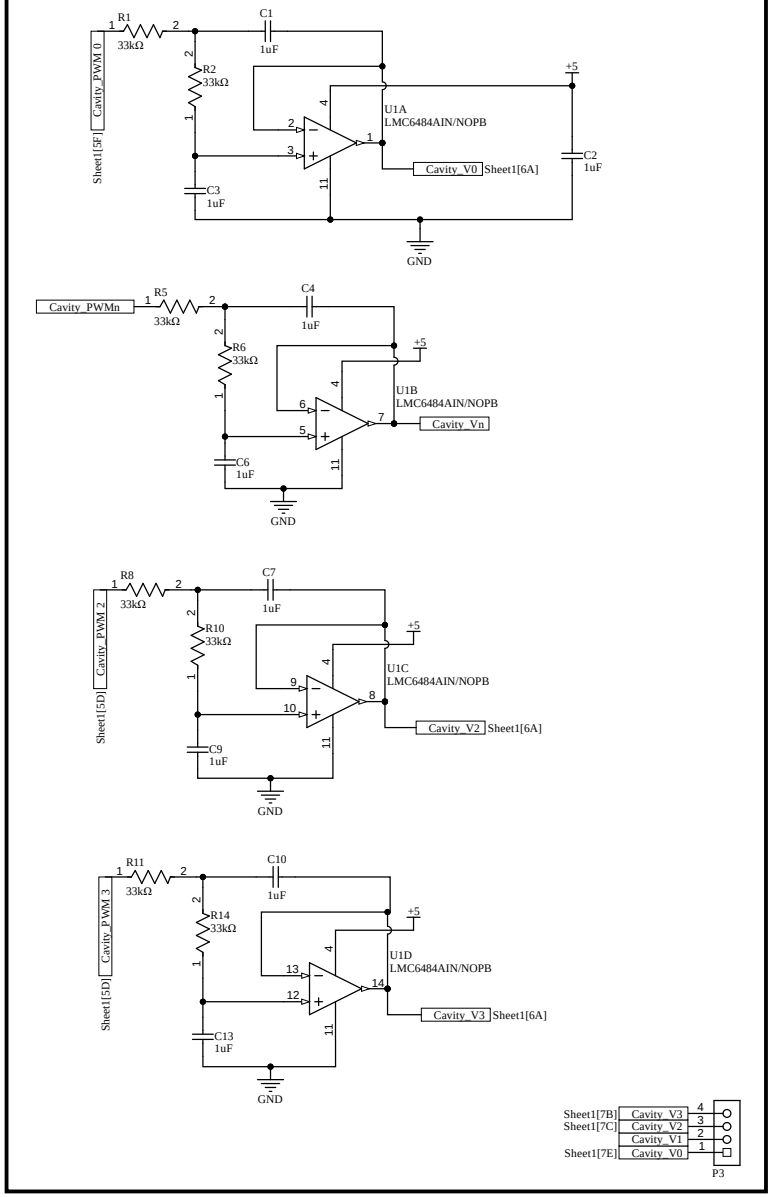

RPi PWM Out Logic Level Shifting (Inverts Logic)

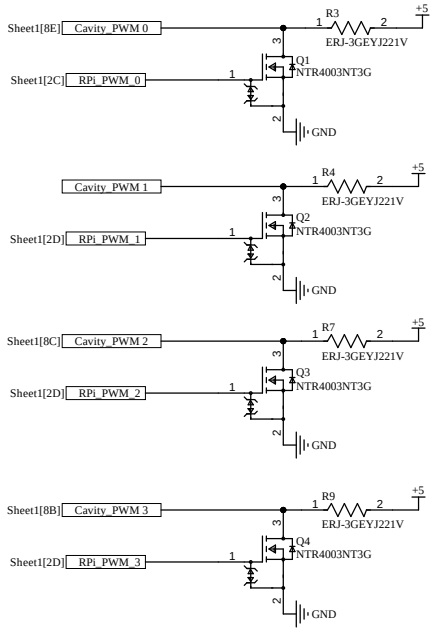

ADC for Power Sensing

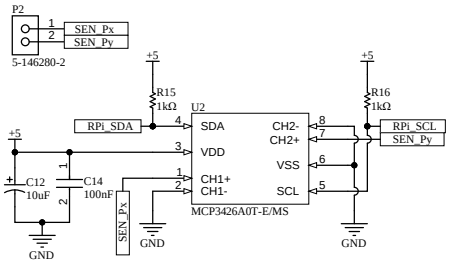

RPi Header Connections

RASPBERRY-MODB+/8GB-USD

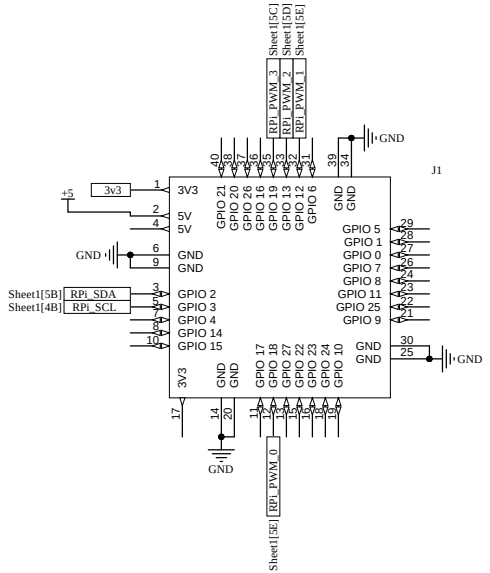

RoHS

APPROVALS	DATE
ENG: *	--/--/--
DSN: *	--/--/--
CHK: *	--/--/--
REFERENCE DOCUMENTS	
BOM:	
ASSY DWG:	
FAB DWG:	
PCB DWG:	

PROJECT *

Altium

ADDRESS 1
ADDRESS 2
ADDRESS 3
ADDRESS 4

PROJECT REVISION: 37b0bfa15d654f39f9727576ece34f5ea2abc

DOCUMENT REVISION: 37b0bfa15d654f39f9727576ece34f5ea2abc

DESIGN ITEM: 37b0bfa15d654f39f9727576ece34f5ea2abc

TITLE *

SIZE	CAGE CODE	DWG NO.	REV
B			

SCALE: FILE NAME Sheet1.SchDoc SHEET 1 OF 1

Line #	Name	Description	Designator	Revision ID	Revision Status	Quantity	RoHS Compliant	RoHS	Target Price	Manufacturer 1	Manufacturer Part Number 1	Manufacturer Lifecycle 1	Supplier 1	Supplier Part Number 1	Supplier Unit Price 1	Supplier Subtotal 1
	1uF	Chip Capacitor, 1 uF, +/- 10%, 50 V, -55 to 125 degC, 1206 (3216 Metric), RoHS, Tape and Reel	C1, C2, C3, C4, C6, C7, C9, C10, C13			9	ROHS3	Details	0.065	KEMET	C1206C105K5RACTU					
	10uF	Capacitor, Tantalum, 10 uF, +/- 10%, 10 V, -55 to 125 degC, 2-Pin SMD (1206), RoHS, Tape and Reel	C12			1	ROHS3		0.104	KEMET	T491A106K010AT					
	100nF	General Purpose Ceramic Capacitor, 1206, 100nF, 5%, X7R, 15%, 50V	C14			1	ROHS3		0.046	Kyocera AVX	12065C104JAT2A					
	RASPBERRY-MODB+/8GB-USD	Raspberry Pi Model B+ 8GB Noobs Usd Card	J1			1	Yes		0	Raspberry Pi	RASPBERRY-MODB+/8GB-USD	Volume Production				
	5-146280-2	Male Header, Pitch 2.54 mm, 1 x 2 Position, Height 8.21 mm, Tail Length 3.05 mm, -65 to 105 degC, RoHS, Bulk	P2			1	ROHS3		0.232	TE Connectivity	5-146280-2					
	61300411121	THT Vertical Pin Header WR-PHD, Pitch 2.54 mm, Single Row, 4 pins	P3			1	ROHS3		0.19	Wurth Electronics	61300411121					
	NTR4003NT3G	MOSFET N-CH 30V 500MA SOT-23	Q1, Q2, Q3, Q4			4	ROHS3		0.4	ON Semiconductor	NTR4003NT3G	Volume Production				
	33kΩ	RES Thick Film, 33kΩ, 1%, 0.25W, 100ppm/°C, 1206	R1, R2, R5, R6, R8, R10, R11, R14			8	ROHS3		0.015	Vishay	CRCW120633K0FKEA					
	ERJ-3GEYJ221V	RES SMD 220 OHM 5% 1/10W 0603	R3, R4, R7, R9			4	Yes		0	Panasonic	ERJ-3GEYJ221V					
	1kΩ		R15, R16			2	ROHS3		0.051	Panasonic	ERJ-8ENF1001V					
	LMC6484AIN/NOPB	CMOS Quad Rail to Rail Input and Output Operational Amplifier, 14-pin MDIP, Pb-Free	U1			1	ROHS3	Y	3.32	TI National Semiconductor	LMC6484AIN/NOPB	Volume Production				
	MCP3426A0T-E/MS	IC ADC 16BIT SIGMA-DELTA 8MSOP	U2			1			3.46	Microchip	MCP3426A0T-E/MS	Volume Production				