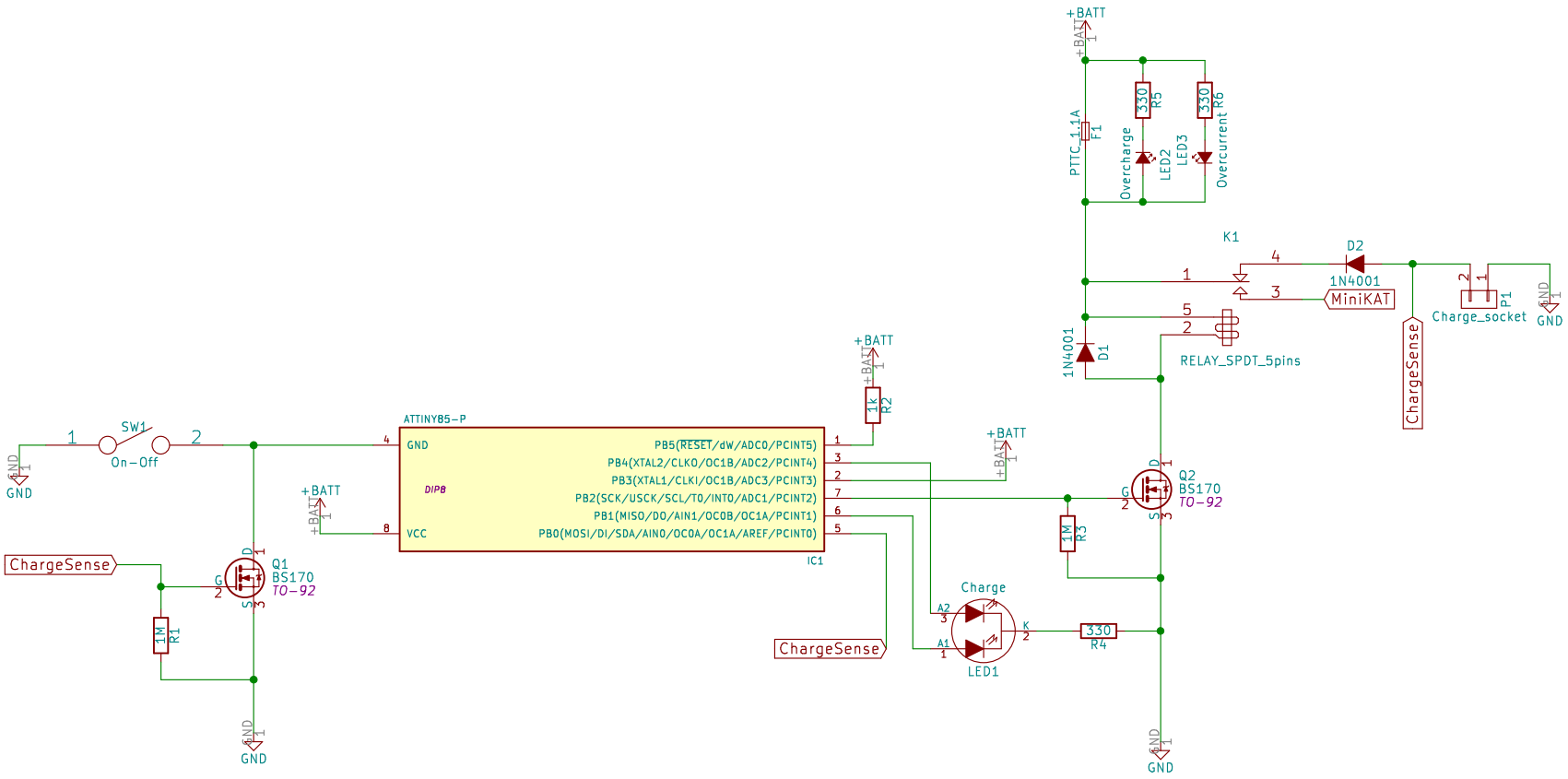

ATTiny85 connections

Leg	Function
1	Reset, no connection
2	D3 as A3, voltage measurement input
3	D4 R/G LED green pin (PWM capable)
4	GND
5	D0 charge voltage present input
6	D1 R/G LED red pin
7	D2 relay trigger output
8	+5V

Sheet: /
File: SKpower.sch

Title: SmartyKAT power management board

Size: A4	Date: Thursday, 25 June 2015	Rev:
KiCad E.D.A. kicad (2015-06-12 BZR 5735)-product		Id: 1/1