Plainsong Metronome

TABLE OF CONTENTS

Page	Description	
1	Title Page	
2	Power Tree	Power Tree Power Tree.SchDoc
3	Block Diagram	Block Diagram Block Diagram.SchDoc
4	*Power*	
5	*MCU*	
6	*CODEC*	
7	*Amplifiers*	
8	*IOa*	
9	*IOb*	

NOTES

- Chasis ground connects at single point at USB connector
- Checks after Rev A fab (prototype):
  - -- General board bring-up
  - -- Check I2C address resistors for Digi-Pots

ADDITIONAL DOCUMENTATION

PCB: 2024001 A Soutra Plainsong Metronome_PCB.PcbDoc

BoM: 2024001 A Soutra Plainsong Metronome_BoM.pdf

Draft: 2024001 A Soutra Plainsong Metronome_DRAFT1.PCBDwf
2024001 A Soutra Plainsong Metronome_DRAFT2.PCBDwf
OutJob: 2024001 A Soutra Plainsong Metronome_OJ.OutJob

SOUTRA
14 Ryehill Gardens, Edinburgh, EH6 8ER
soutraelectronics@gmail.com +44(0)7874693650
soutraelectronics.com

Title:	Plainsong Metronome	Engineer:	S.Thomas
Project:	2024001 A Soutra Plainsong Metronome	Approval:	S.Thomas
Sch Rev:	A	Date:	21/06/2024
File Name:	Title-Page.SchDoc	Sheet	1 of 9
Size:	A4	Scale:	1:1
		Libraries:	ST_Library.LibPkg

Power Tree

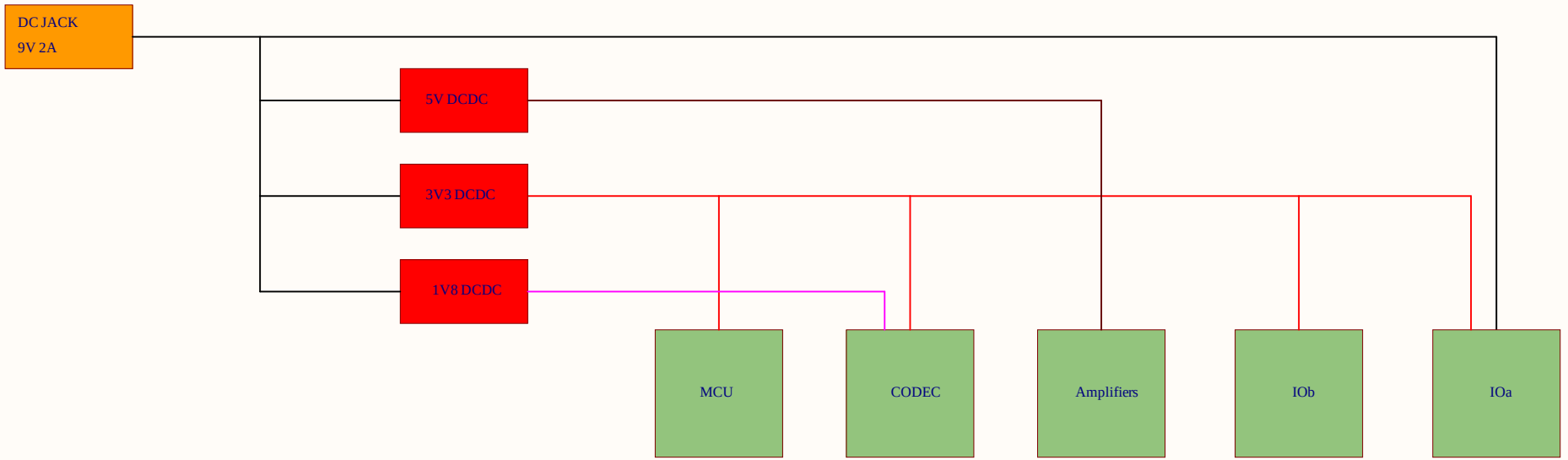

LEGEND

- Input Connector
- Power Conversion
- Powered Device/Sub-Circuit
- Output Connector

SOUTRA
14 Ryehill Gardens, Edinburgh, EH6 8ER
soutraelectronics@gmail.com +44(0)7874693650
soutraelectronics.com

Title:	Plainsong Metronome	Engineer:	S.Thomas
Project:	2024001 A Soutra Plainsong Metronome	Approval:	S.Thomas
Sch Rev:	A	Date:	21/06/2024
		Date:	22/10/2024

REFERENCE DOCUMENTS			LIBRARY		
BoM:	2024001 A Soutra Pl	Rev:	gAMetronome_SoutraLibrary.LibPkg	Size:	A4
PCB:	2024001 A Soutra Pl	Rev:	gAMetronome_PCB.PcbDoc	Scale:	1:1
Draft:	Draft_Doc.draft	Rev:	A	File Name:	Power Tree.SchDoc
				Sheet	2 of 9

Block Diagram

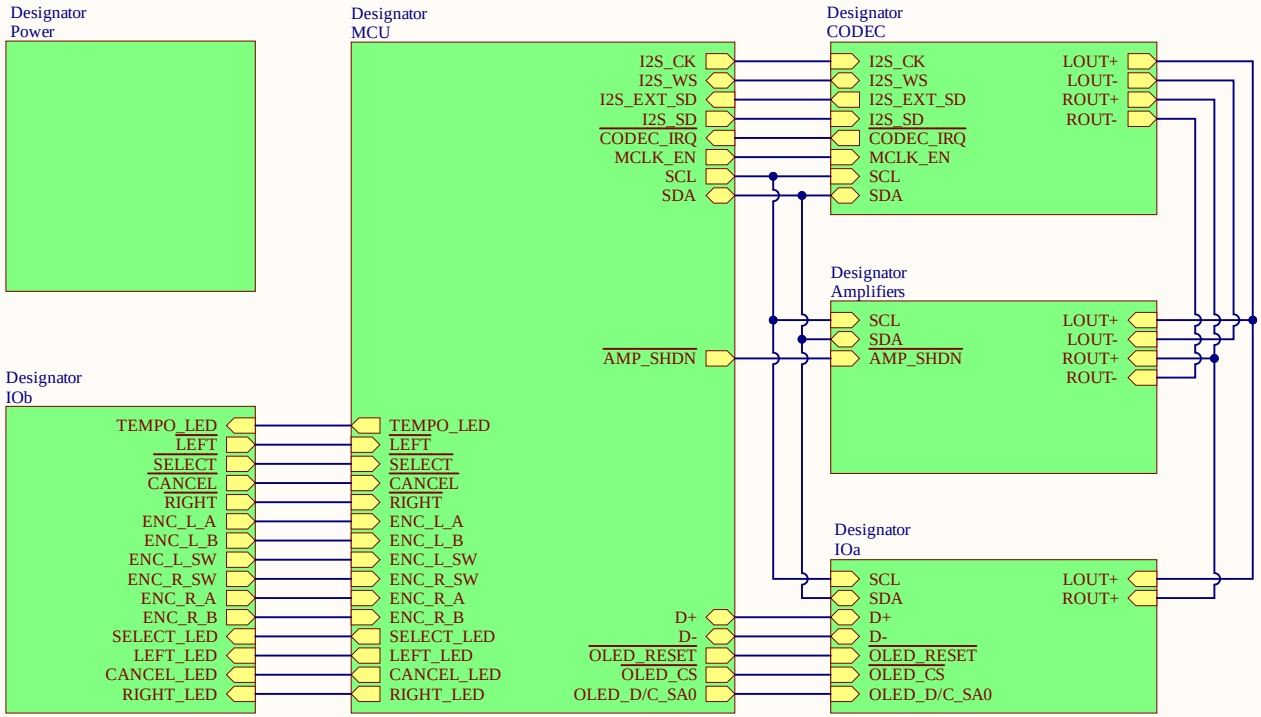

SOUTRA
14 Ryehill Gardens, Edinburgh, EH6 8ER
soutraelectronics@gmail.com +44(0)7874693650
soutraelectronics.com

Title:	Plainsong Metronome	Engineer:	S.Thomas
Project:	2024001 A Soutra Plainsong Metronome	Approval:	S.Thomas
Sch Rev: A	Date: 21/06/2024	Date:	22/10/2024

REFERENCE DOCUMENTS		LIBRARY	
BoM: 2024001 A Soutra Pl	Rev: A	Metronome_BoM.pdf	Size: A4
PCB: 2024001 A Soutra Pl	Rev: A	Metronome_PCB.PcbDoc	Scale: 1:1
Draft: Draft_Doc.draft	Rev: A		File Name: Block Diagram.SchDoc
			Sheet 3 of 9

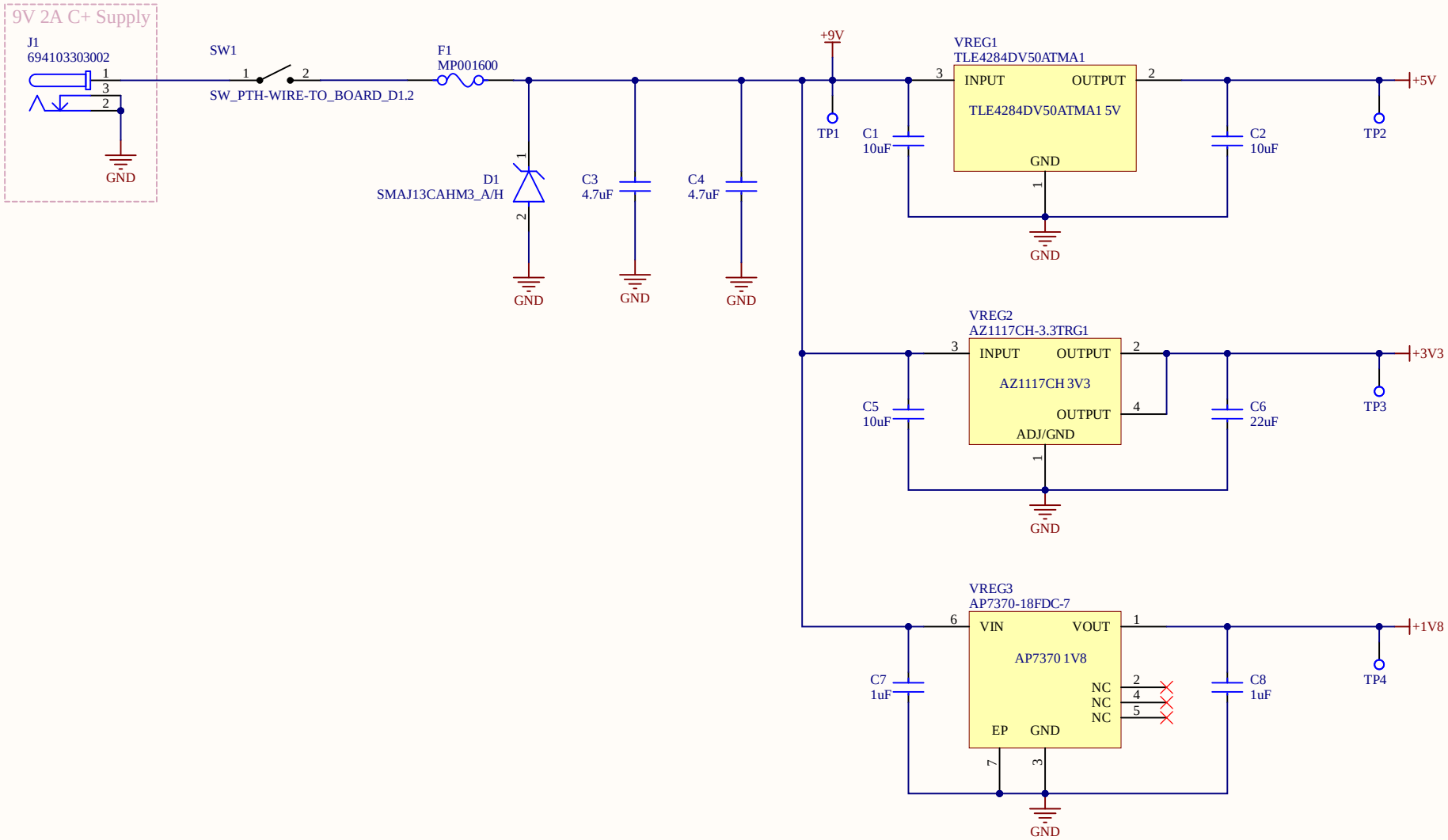

SOUTRA

14 Ryehill Gardens, Edinburgh, EH6 8ER
soutraelectronics@gmail.com +44(0)7874693650
soutraelectronics.com

Title:	Plainsong Metronome	Engineer:	S.Thomas
Project:	2024001 A Soutra Plainsong Metronome	Approval:	S.Thomas
Sch Rev:	A	Date:	21/06/2024
		Date:	22/10/2024

REFERENCE DOCUMENTS		LIBRARY	
BoM:	2024001 A Soutra Pl	Rev:	gAMetronome_BoMLibrary.LibPkg
PCB:	2024001 A Soutra Pl	Rev:	gAMetronome_PCB.PcbDoc
Draft:	Draft_Doc.draft	Rev:	A

Size:	A4
Scale:	1:1
File Name:	Power.SchDoc
Sheet	4 of 9

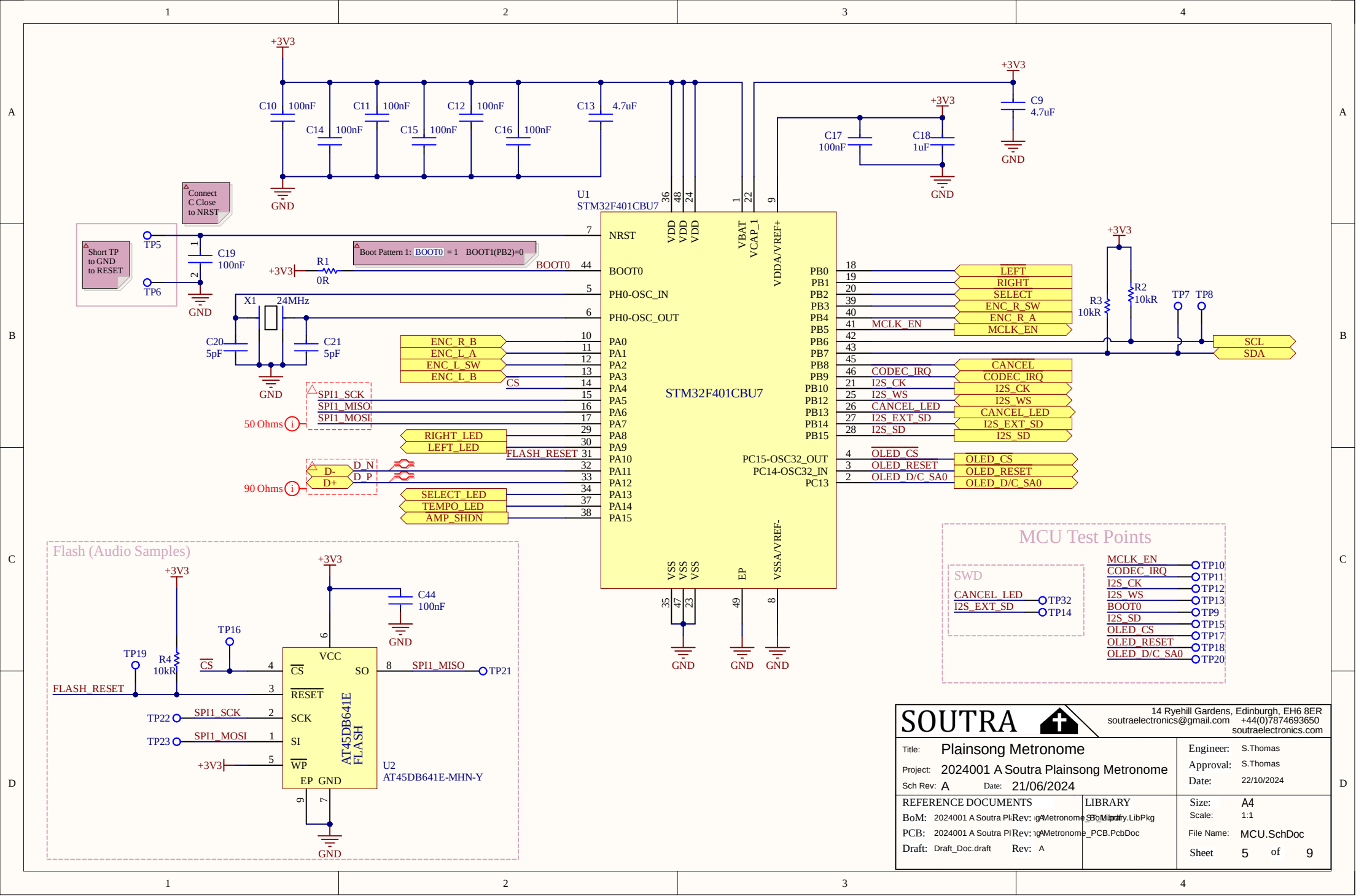
+3V3
C10 100nF
C11 100nF
C12 100nF
C13 4.7uF
C14 100nF
C15 100nF
C16 100nF
GND
C17 100nF
C18 1uF
C9 4.7uF
Connect C Close to NRST
Short TP to GND to RESET
TP5
TP6
C19 100nF
U1
STM32F401CBU7
NRST
BOOT0
PH0-OSC_IN
PH0-OSC_OUT
VDD
VBAT
VCAP_1
VDDA/VREF+
VSS
EP
VSSA/VREF-
PA0
PA1
PA2
PA3
PA4
PA5
PA6
PA7
PA8
PA9
PA10
PA11
PA12
PA13
PA14
PA15
PB0
PB1
PB2
PB3
PB4
PB5
PB6
PB7
PB8
PB9
PB10
PB12
PB13
PB14
PB15
PC15-OSC32_OUT
PC14-OSC32_IN
PC13
Boot Pattern 1: BOOT0 = 1 BOOT1(PB2)=0
R1 0R
X1 24MHz
C20 5pF
C21 5pF
ENC_R_B
ENC_L_A
ENC_L_SW
ENC_L_B
CS
SPI1_SCK
SPI1_MISO
SPI1_MOSI
50 Ohms
RIGHT_LED
LEFT_LED
FLASH_RESET
D-
D+
D_N
D_P
90 Ohms
SELECT_LED
TEMPO_LED
AMP_SHDN
LEFT
RIGHT
SELECT
ENC_R_SW
ENC_R_A
MCLK_EN
R2 10kR
R3 10kR
TP7
TP8
SCL
SDA
CANCEL
CODEC_IRQ
I2S_CK
I2S_WS
CANCEL_LED
I2S_EXT_SD
I2S_SD
OLED_CS
OLED_RESET
OLED_D/C_SA0
Flash (Audio Samples)
C44 100nF
TP16
TP19
R4 10kR
FLASH_RESET
TP22
TP23
AT45DB641E FLASH
VCC
CS
SO
RESET
SCK
SI
WP
EP GND
U2
AT45DB641E-MHN-Y
TP21
MCU Test Points
SWD
TP32
TP14
TP10
TP11
TP12
TP13
TP9
TP15
TP17
TP18
TP20
SOUTRA
14 Ryehill Gardens, Edinburgh, EH6 8ER
soutraelectronics@gmail.com +44(0)7874693650
soutraelectronics.com
Title: Plainsong Metronome
Project: 2024001 A Soutra Plainsong Metronome
Sch Rev: A Date: 21/06/2024
Engineer: S.Thomas
Approval: S.Thomas
Date: 22/10/2024
REFERENCE DOCUMENTS
BoM: 2024001 A Soutra Pl Rev: gMetronome_BoM.BomDoc
PCB: 2024001 A Soutra Pl Rev: gMetronome_PCB.PcbDoc
Draft: Draft_Doc.draft Rev: A
LIBRARY
Library.LibPkg
Size: A4
Scale: 1:1
File Name: MCU.SchDoc
Sheet 5 of 9

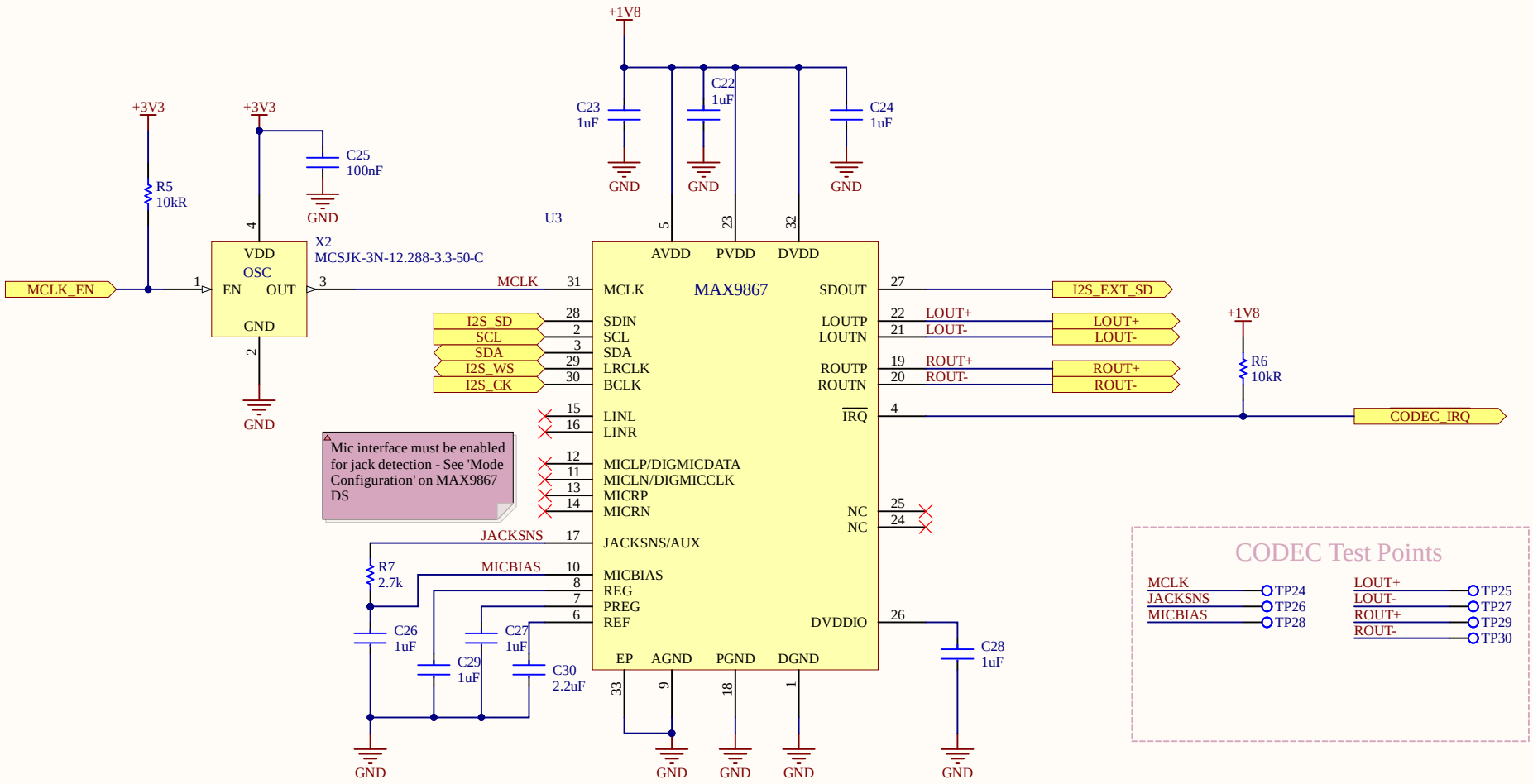

SOUTRA

14 Ryehill Gardens, Edinburgh, EH6 8ER
soutraelectronics@gmail.com +44(0)7874693650
soutraelectronics.com

Title:	Plainsong Metronome	Engineer:	S.Thomas
Project:	2024001 A Soutra Plainsong Metronome	Approval:	S.Thomas
Sch Rev:	A	Date:	21/06/2024
		Date:	22/10/2024

REFERENCE DOCUMENTS			LIBRARY
BoM:	2024001 A Soutra Pl	Rev:	gA Metronome_BOM.pdf
PCB:	2024001 A Soutra Pl	Rev:	gA Metronome_PCB.PcbDoc
Draft:	Draft_Doc.draft	Rev:	A

Size:	A4
Scale:	1:1
File Name:	CODEC.SchDoc
Sheet	6 of 9

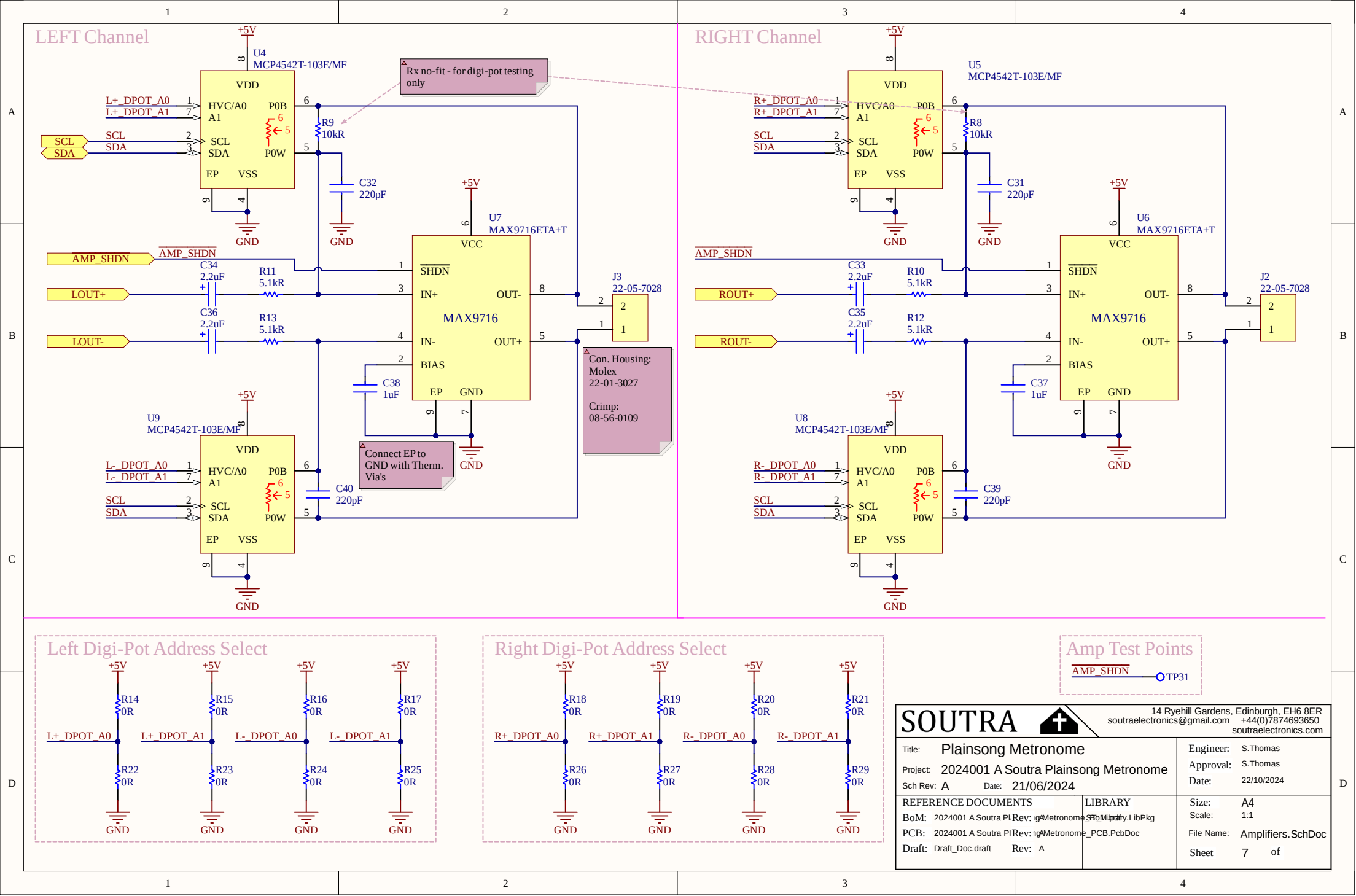

SOUTRA

14 Ryehill Gardens, Edinburgh, EH6 8ER
soutraelectronics@gmail.com +44(0)7874693650
soutraelectronics.com

Title:	Plainsong Metronome
Project:	2024001 A Soutra Plainsong Metronome
Sch Rev:	A
Date:	21/06/2024
Engineer:	S.Thomas
Approval:	S.Thomas
Date:	22/10/2024

REFERENCE DOCUMENTS

BoM:	2024001 A Soutra Pl	Rev: gA
PCB:	2024001 A Soutra Pl	Rev: gA
Draft:	Draft_Doc.draft	Rev: A

LIBRARY

Metronome_BoM.LibPkg
Metronome_PCB.PcbDoc

Size:	A4
Scale:	1:1
File Name:	Amplifiers.SchDoc
Sheet	7 of

USB Input

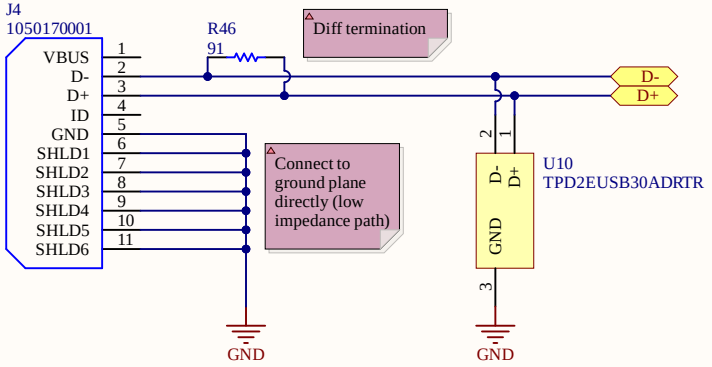

3.5mm Headphone Output - Wire-to-Board

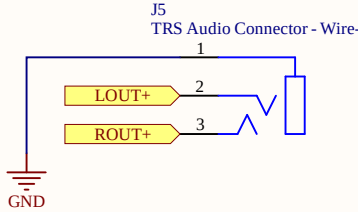

OLED FFC Ribbon Cable Connector

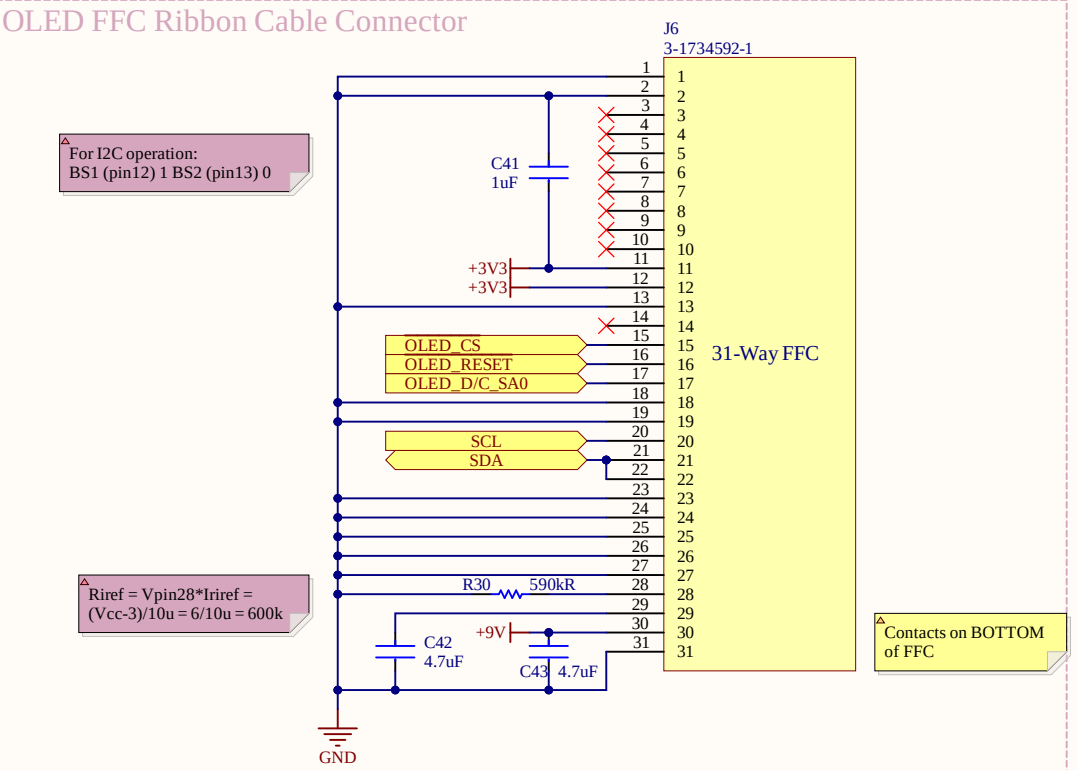

SOUTRA
14 Ryehill Gardens, Edinburgh, EH6 8ER
soutraelectronics@gmail.com +44(0)7874693650
soutraelectronics.com

Title:	Plainsong Metronome	Engineer:	S.Thomas
Project:	2024001 A Soutra Plainsong Metronome	Approval:	S.Thomas
Sch Rev:	A	Date:	21/06/2024
		Date:	22/10/2024

REFERENCE DOCUMENTS		LIBRARY	
BoM:	2024001 A Soutra Pl	Rev:	gAMetronome_BomLibrary.LibPkg
PCB:	2024001 A Soutra Pl	Rev:	gAMetronome_PCB.PcbDoc
Draft:	Draft_Doc.draft	Rev:	A

Size:	A4
Scale:	1:1
File Name:	IOa.SchDoc
Sheet	8 of 9

Left Encoder

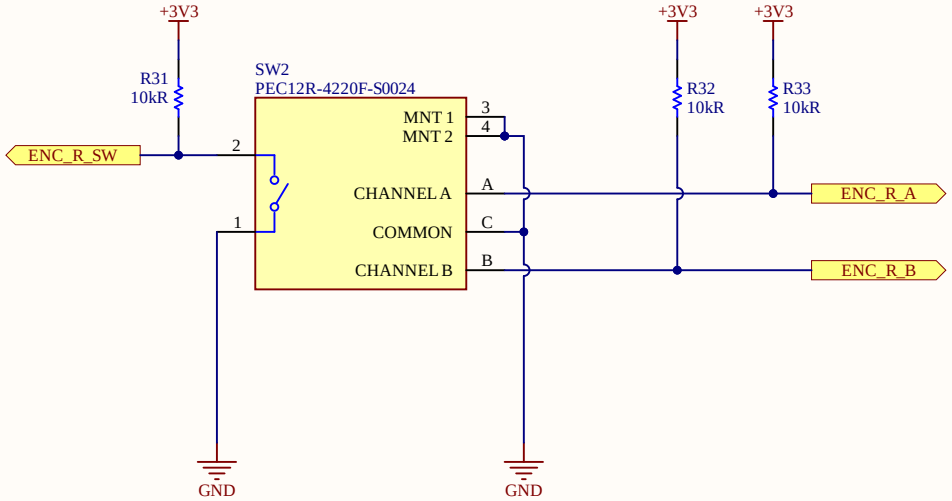

Selection Switches - Cherry MX

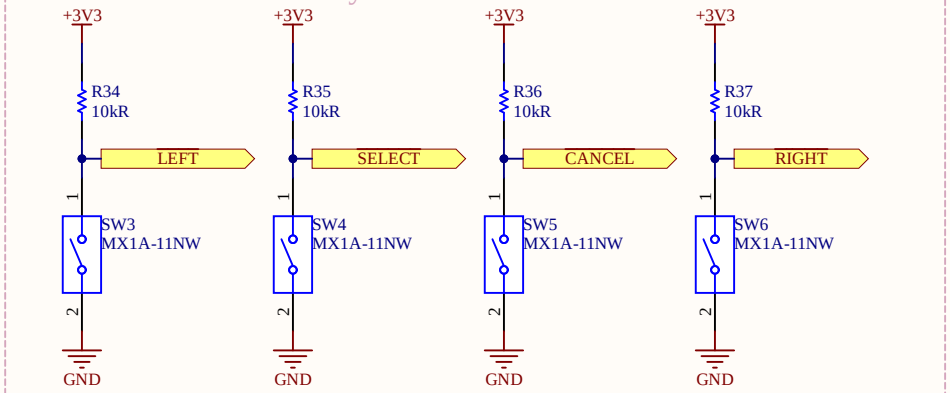

Right Encoder

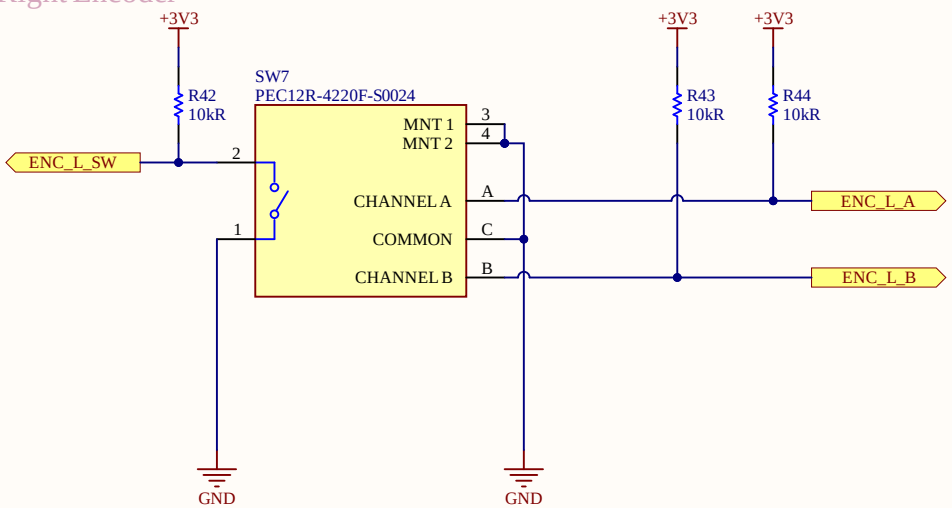

Indicator LEDs

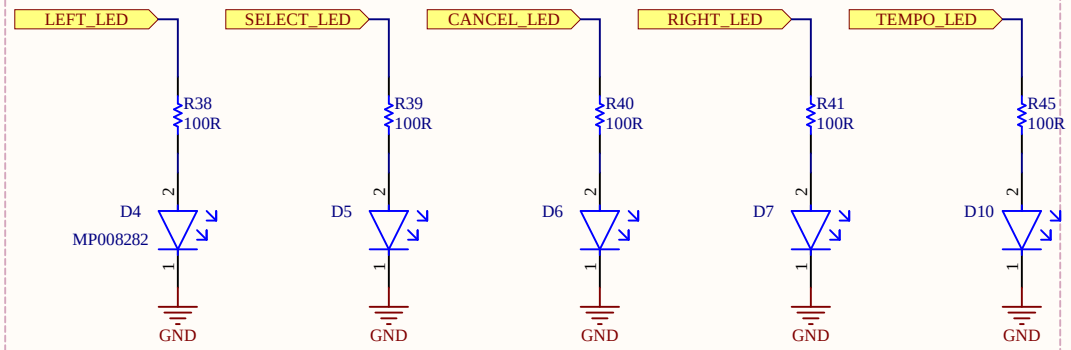

MENTOR 1275.1001 Light Pipes for all LED - see DS for mounting specs.

SOUTRA

14 Ryehill Gardens, Edinburgh, EH6 8ER
soutraelectronics@gmail.com +44(0)7874693650
soutraelectronics.com

Title:	Plainsong Metronome	Engineer:	S.Thomas
Project:	2024001 A Soutra Plainsong Metronome	Approval:	S.Thomas
Sch Rev:	A	Date:	21/06/2024
		Date:	22/10/2024

REFERENCE DOCUMENTS		LIBRARY	
BoM:	2024001 A Soutra Pl	Rev:	gAMetronome_BoMLibrary.LibPkg
PCB:	2024001 A Soutra Pl	Rev:	gAMetronome_PCB.PcbDoc
Draft:	Draft_Doc.draft	Rev:	A

Size:	A4
Scale:	1:1
File Name:	IOb.SchDoc
Sheet	9 of 9