CONNECTOR
24PIN DESCRIPTIONE

PIN	SIGNAL
1	GND
2	GND
3	SIO_D
4	AVDD
5	SIO_C
6	RESET
7	VSYNC
8	PWDN
9	HREF
10	DVDD
11	DOVDD
12	D7
13	XCLK
14	D6
15	GND
16	D5
17	PCLK
18	D4
19	D0
20	D3
21	D1
22	D2
23	GND
24	GND

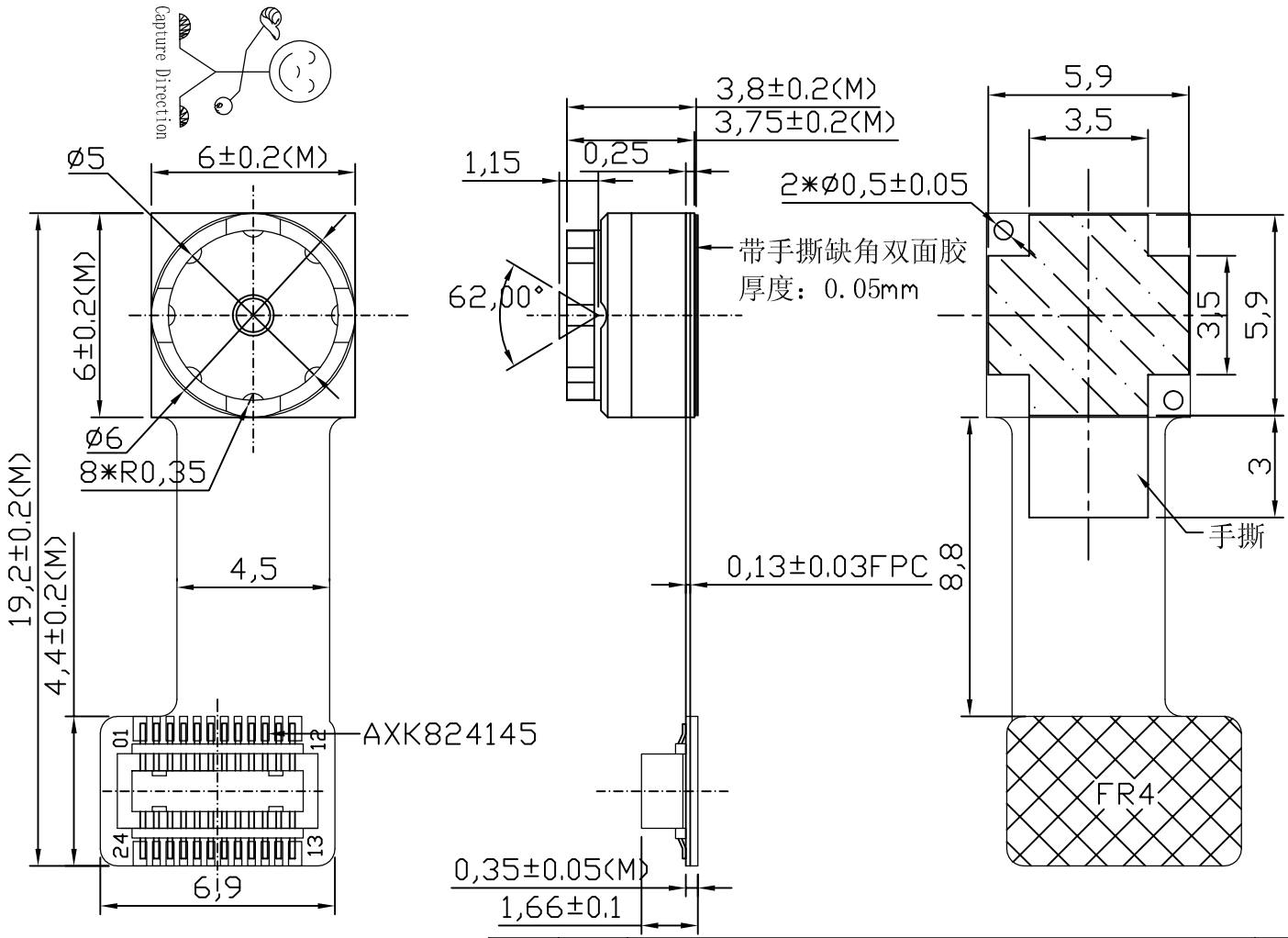

Parameter			
焦距(EFL)	2.9mm	景深 AT0.5M	300-1300mm
光圈(F.NO)	2.8	像 素	1600*1200
视场角	65°	镜头类型	1/6 inch
畸 变	<1.0%	感光芯片	OV7670

SELECT		✓		
level dim.	A	B	C	D
0~5	±0.03	±0.05	±0.08	±0.10
5~10	±0.05	±0.08	±0.10	±0.15
10~50	±0.08	±0.10	±0.15	±0.20
50~100	±0.10	±0.15	±0.20	±0.25
100~	±0.10%	±0.15%	±0.20%	±0.30%

REV.	Zone	Description	Approved	Date
1/0	All	First Release	Canlyn	12-Sep-09

正唯光电有限公司

Model Name:

Part Name: TM15

Drawn By: Canlyn Date: 20-Apr-09

Designed By: Canlyn Date: 20-Apr-09

Checked By: Canlyn Date: 20-Apr-09

Approved By: Canlyn Date: 20-Apr-09

Drawing Name: MODULE Guise

Sheet: 1 of 1

Part Number: ZW7670-F070

Version: 1/0

Projection Type: Third Angle

Unit: MM

Scale: 1:1

Material:

Surface Finish: ----------