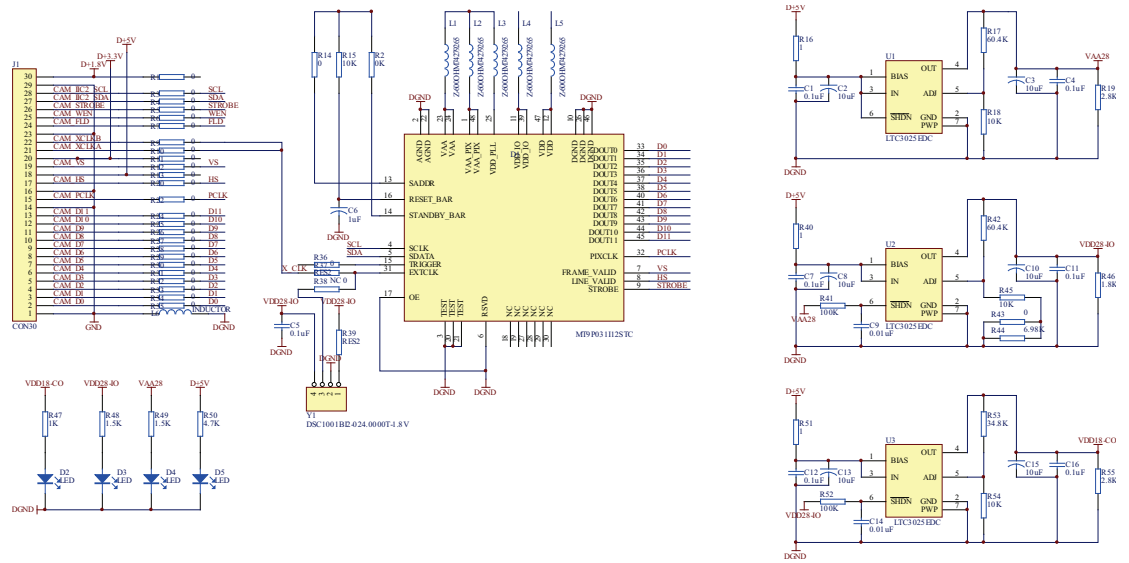
J1
CON30
CAM_IR2 SCL
CAM_IR2 SDA
CAM_STROBE
CAM_WEN
CAM_FLD
CAM_XL_DAB
CAM_XL_DRA
CAM_VS
CAM_HS
CAM_PCLK
CAM_DI 1
CAM_DI 0
CAM_D9
CAM_D8
CAM_D7
CAM_D6
CAM_D5
CAM_D4
CAM_D3
CAM_D2
CAM_D1
CAM_D0
SCL
STROBE
WEN
FLD
VS
HS
PCLK
D11
D10
D9
D8
D7
D6
D5
D4
D3
D2
D1
D0
INDUCTOR
D+5V
D+3.3V
D+1.8V
GND
DGND
R14 0
R15 10K
R2 10K
C6 1uF
R36 0
R38 NC 0
RES2
SCL
SDA
X_CLK
VDD28-IO
C5 0.1uF
R39 RES2
Y1
DSC1001BI2-024.0000T-1.8V
L1 L2 L3 L4 L5
Z4K0HBAZ8205
AGND
VAA
VAA_PIX
VDD_PLL
VDD_IO
VDD
SADDR
RESET_BAR
STANDBY_BAR
SCLK
SDATA
TRIGGER
EXTCLK
OE
TEST
RSVD
NC
DOUT0 D0
DOUT1 D1
DOUT2 D2
DOUT3 D3
DOUT4 D4
DOUT5 D5
DOUT6 D6
DOUT7 D7
DOUT8 D8
DOUT9 D9
DOUT10 D10
DOUT11 D11
PIXCLK PCLK
FRAME_VALID VS
LINE_VALID HS
STROBE
MT9P031I12STC
VDD18-CO
VDD28-IO
VAA28
D+5V
R47 1K
R48 1.5K
R49 1.5K
R50 4.7K
D2 LED
D3 LED
D4 LED
D5 LED
R16 1
C1 0.1uF
C2 10uF
U1
LTC3025EDC
BIAS
IN
SHDN
OUT
ADJ
GND
PWP
R17 60.4K
R18 10K
C3 10uF
C4 0.1uF
R19 2.8K
R40 1
C7 0.1uF
C8 10uF
R41 100K
C9 0.01uF
U2
R42 60.4K
R45 10K
R43 0
R44 6.98K
C10 10uF
C11 0.1uF
R46 1.8K
R51 1
C12 0.1uF
C13 10uF
R52 100K
C14 0.01uF
U3
R53 34.8K
R54 10K
C15 10uF
C16 0.1uF
R55 2.8K