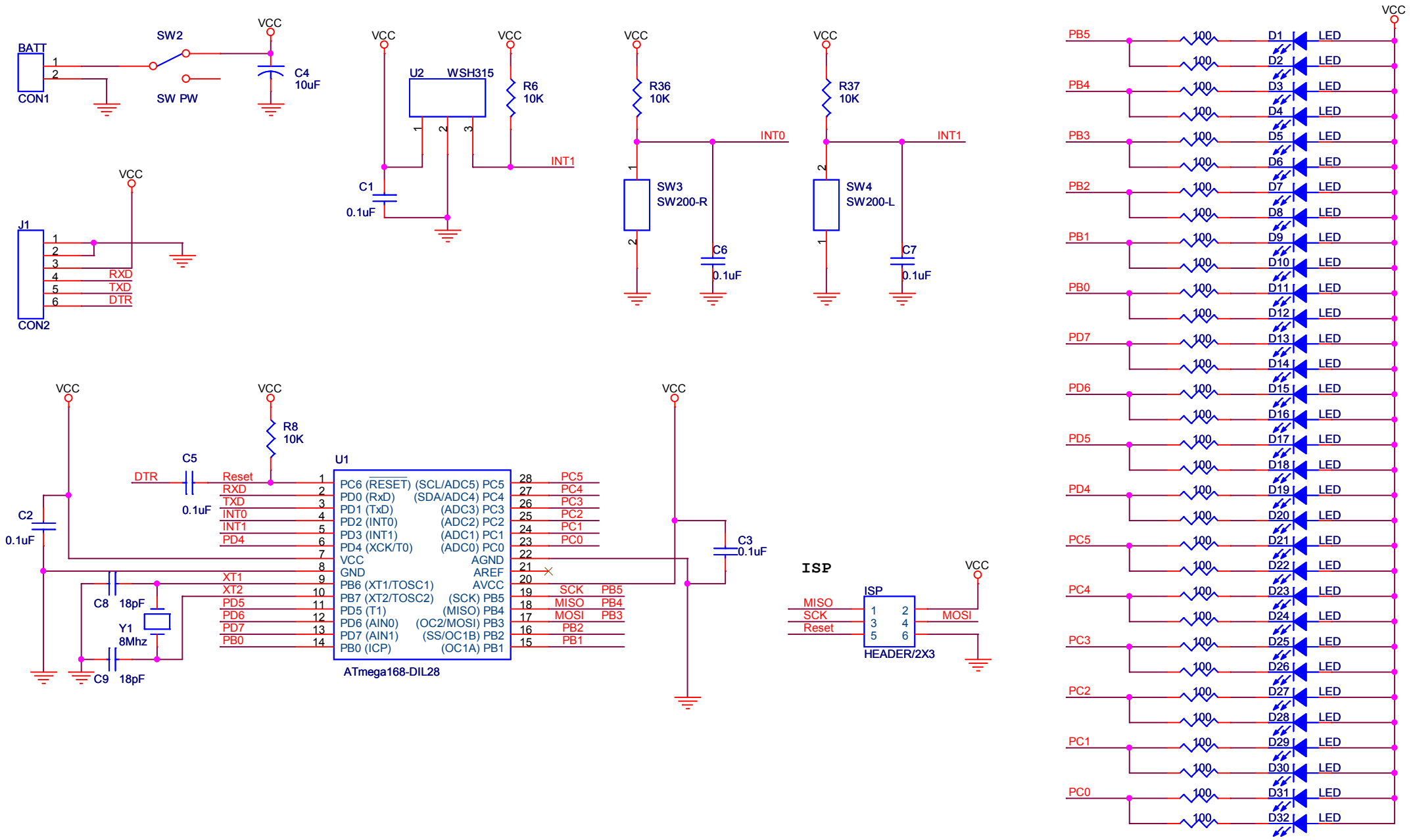

Title	<Title>	
Size A4	Document Number <Doc>	Rev <RevC>
Date: Tuesday, June 05, 2012	Sheet 1 of 1	