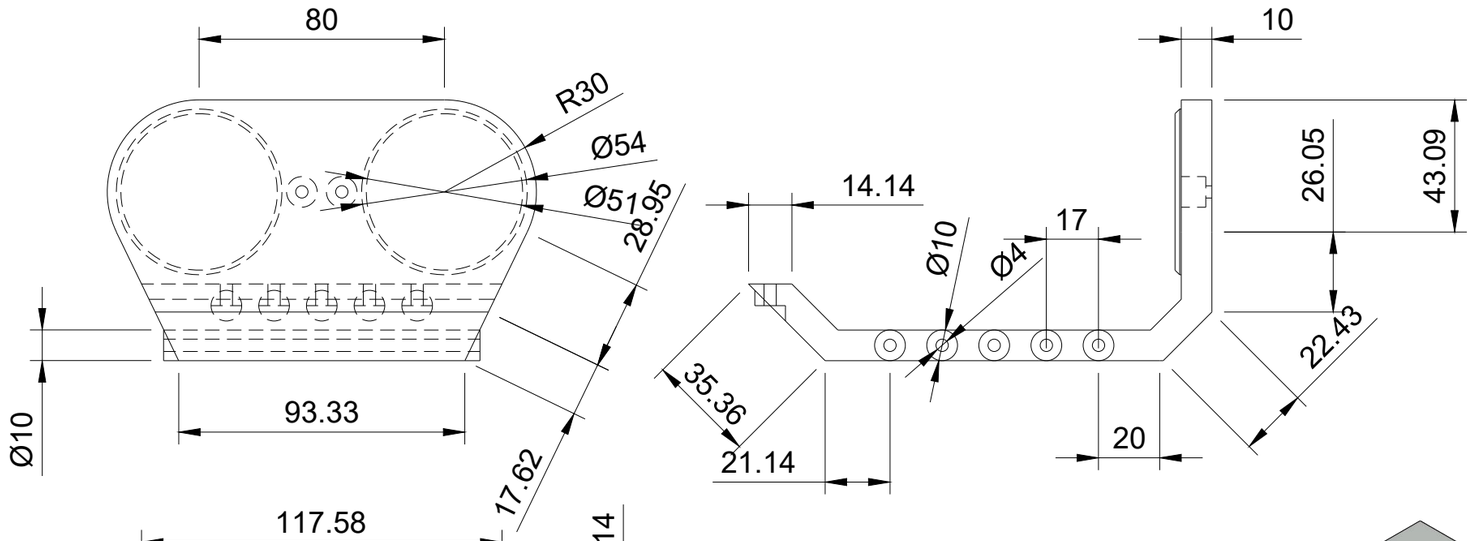

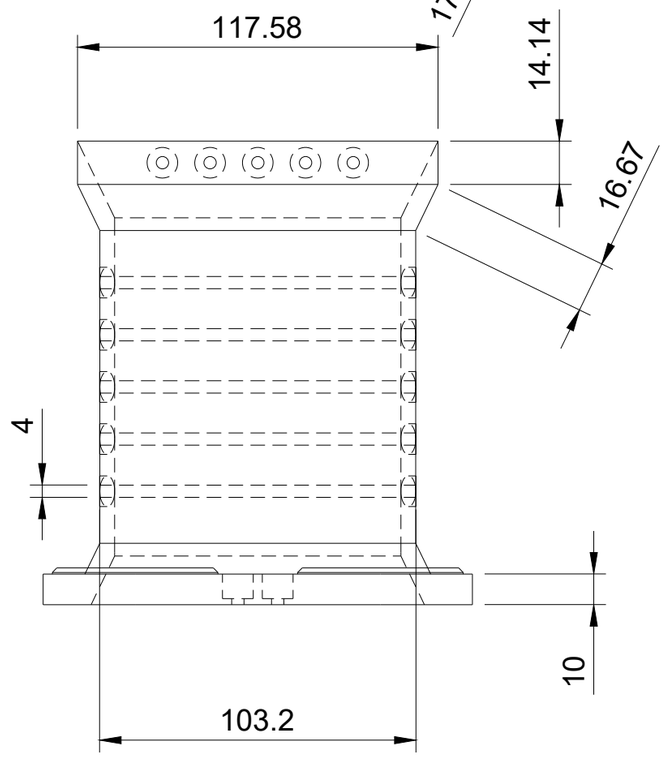

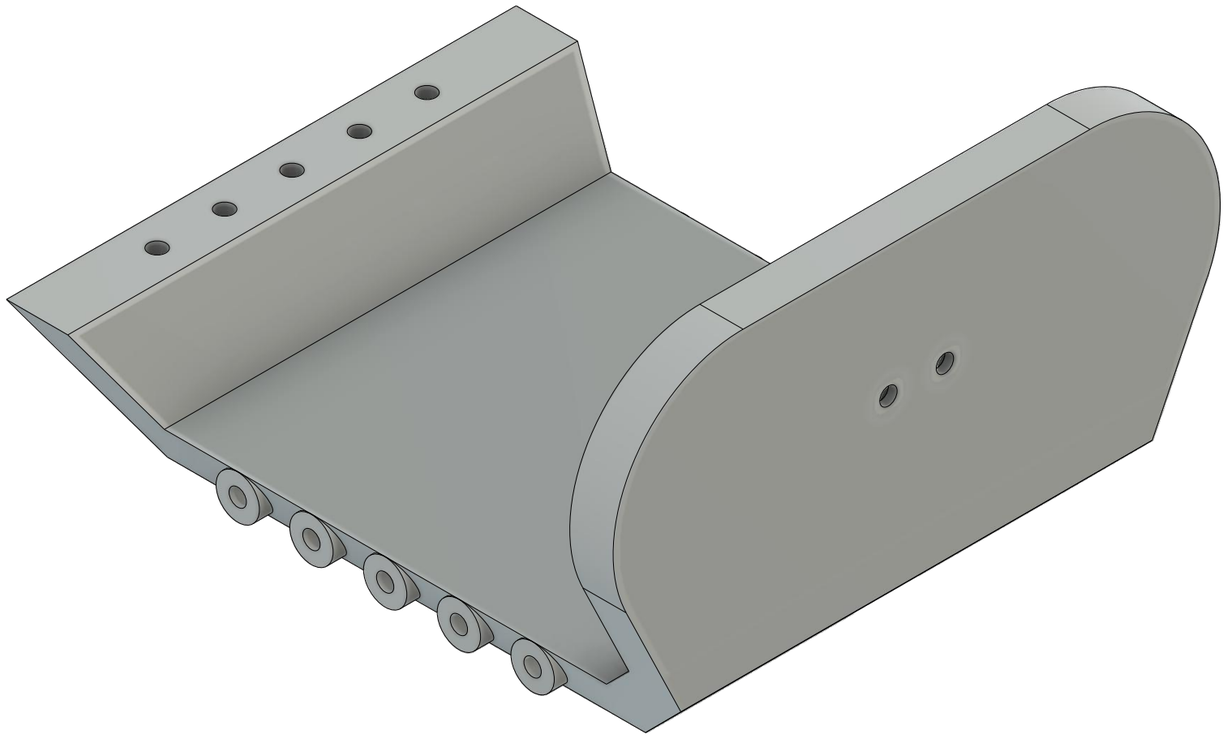

Dept.	Technical reference	Created by	Approved by
ME		Subhashis Hansda	Prof. Trushar Shah
		Document type: A3 1:2	Document status
		Title: Chest Lower Body	DWG No. 12
			Rev. / Date of issue: - / Sheet: 1/1