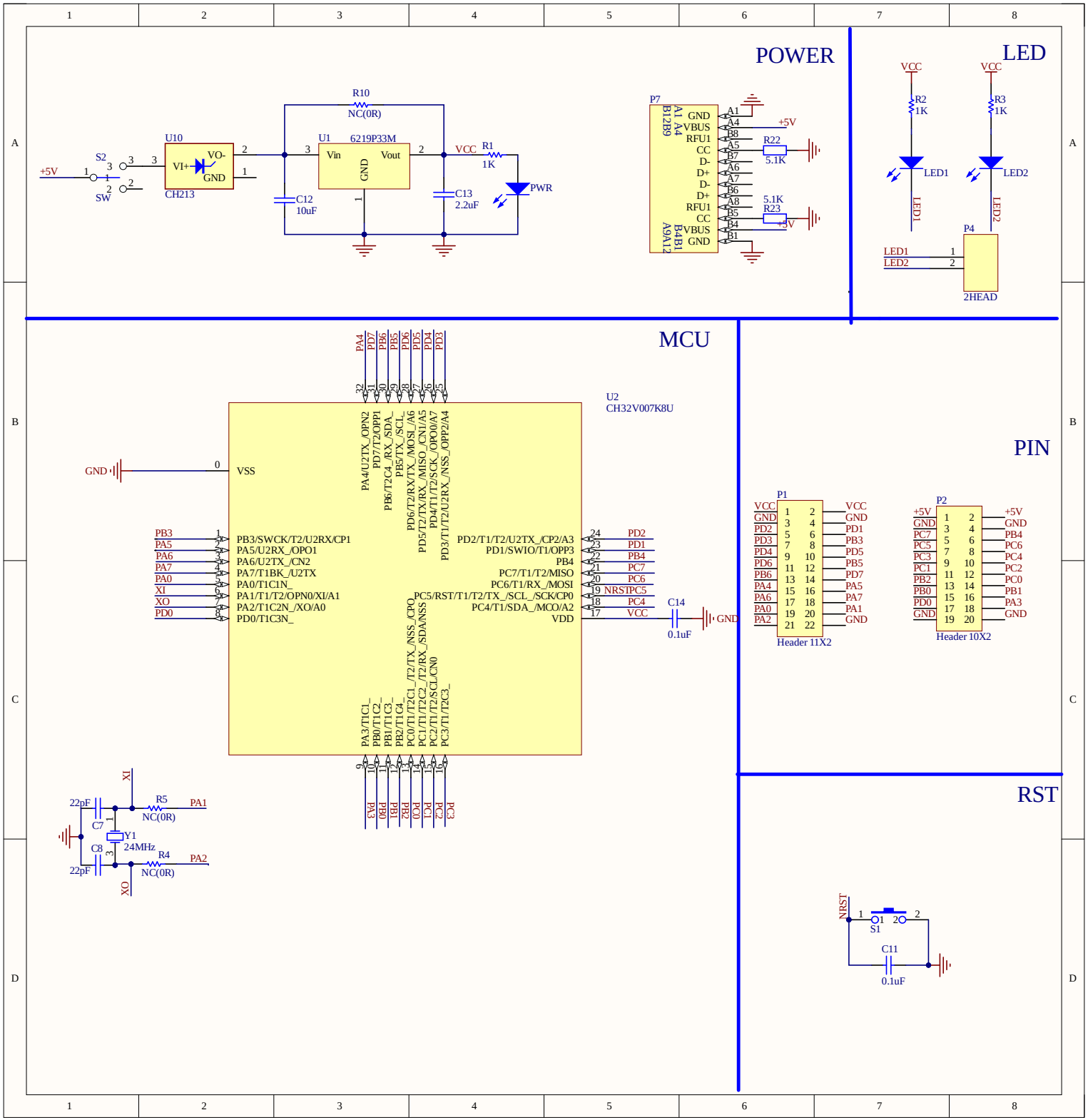
POWER
LED
MCU
PIN
RST
U10
CH213
VI+
VO-
GND
S2
SW
+5V
R10
NC(0R)
U1
6219P33M
Vin
Vout
GND
C12
10uF
C13
2.2uF
VCC
R1
1K
PWR
P7
GND
VBUS
RFU1
CC
D-
D+
R22
5.1K
R23
5.1K
VCC
R2
1K
R3
1K
LED1
LED2
P4
2HEAD
U2
CH32V007K8U
VSS
PA4/U2TX_/OPN2
PD7/T2OPP1
PB6/T2C4_/RX_/SDA_
PB5/TX_/SCL_
PD6/T2/RX/TX_/MOSI_/A6
PD5/T2/TX/RX_/MISO_/CN1/A5
PD4/T1/T2/SCK_/OPO0/A7
PD3/T1/T2/U2RX_/NSS_/OPP2/A4
PB3/SWCK/T2/U2RX/CP1
PA5/U2RX_/OPO1
PA6/U2TX_/CN2
PA7/T1BK_/U2TX
PA0/T1C1N_
PA1/T1/T2/OPN0/XI/A1
PA2/T1C2N_/XO/A0
PD0/T1C3N_
PD2/T1/T2/U2TX_/CP2/A3
PD1/SWIO/T1/OPP3
PB4
PC7/T1/T2/MISO
PC6/T1/RX_/MOSI
PC5/RST/T1/T2/TX_/SCL_/SCK/CP0
PC4/T1/SDA_/MCO/A2
VDD
NRST
C14
0.1uF
PA3/T1C1_
PB0/T1C2_
PB1/T1C3_
PB2/T1C4_
PC0/T1/T2C1_/T2/TX_/NSS_/CPO
PC1/T1/T2C2_/T2/RX_/SDA/NSS
PC2/T1/T2/SCL/CN0
PC3/T1/T2C3_
XI
XO
22pF
C7
C8
Y1
24MHz
R5
NC(0R)
R4
NC(0R)
PA1
PA2
P1
Header 11X2
P2
Header 10X2
S1
C11
0.1uF

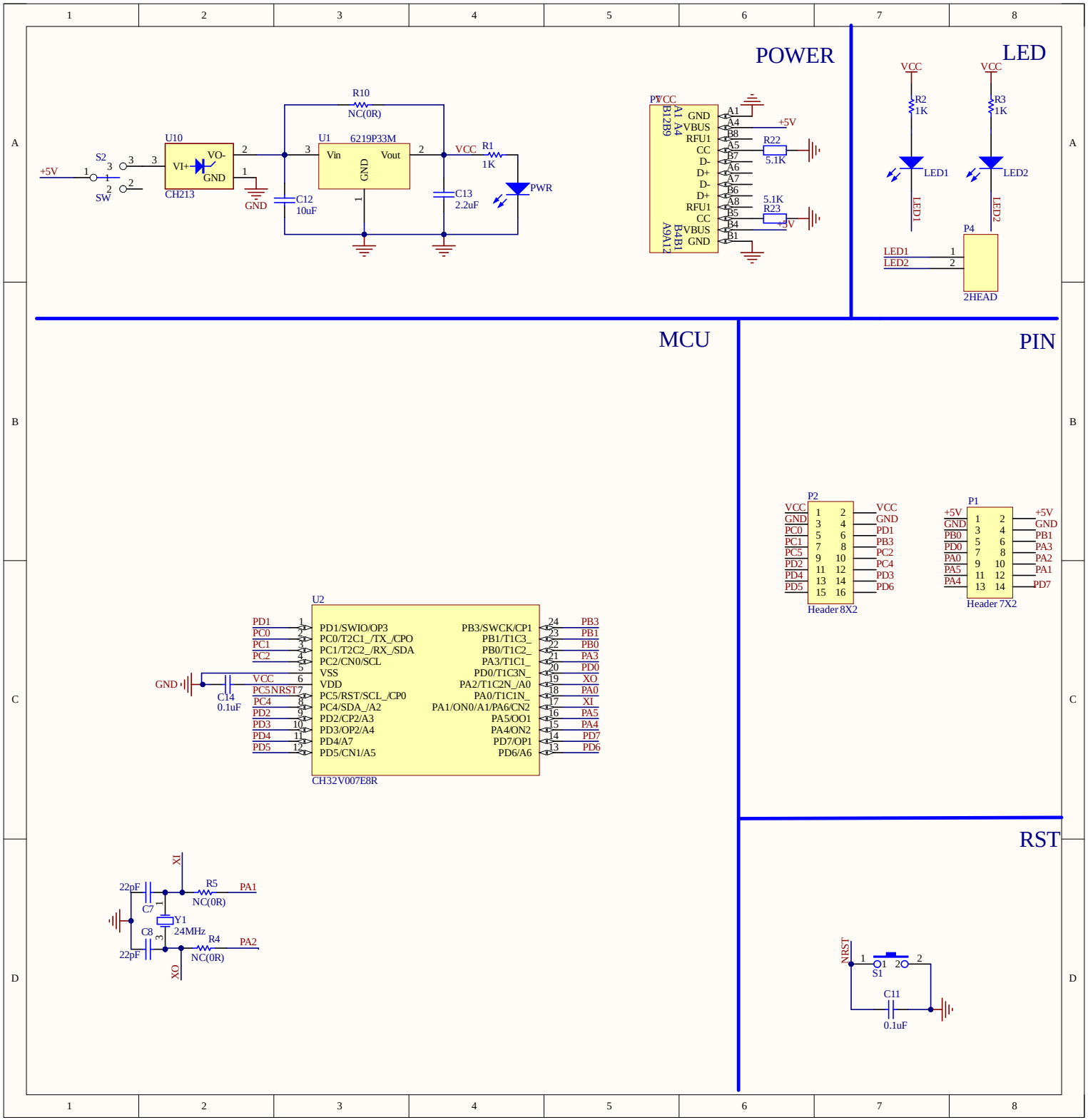
POWER
LED
MCU
PIN
RST
+5V
S2
SW
U10
CH213
VI+
VO-
GND
C12
10uF
R10
NC(0R)
U1
6219P33M
Vin
Vout
VCC
R1
1K
C13
2.2uF
PWR
P7
GND
VBUS
RFU1
CC
D-
D+
R22
5.1K
R23
VCC
R2
1K
R3
1K
LED1
LED2
P4
2HEAD
U2
CH32V007E8R
PD1/SWIO/OP3
PC0/T2C1_/TX_/CPO
PC1/T2C2_/RX_/SDA
PC2/CN0/SCL
VSS
VDD
PC5/RST/SCL_/CP0
PC4/SDA_/A2
PD2/CP2/A3
PD3/OP2/A4
PD4/A7
PD5/CN1/A5
PB3/SWCK/CP1
PB1/T1C3_
PB0/T1C2_
PA3/T1C1_
PD0/T1C3N_
PA2/T1C2N_/A0
PA0/T1C1N_
PA1/ON0/A1/PA6/CN2
PA5/OO1
PA4/ON2
PD7/OP1
PD6/A6
C14
0.1uF
XI
XO
22pF
C7
C8
Y1
24MHz
R5
NC(0R)
R4
NC(0R)
PA1
PA2
P2
Header 8X2
P1
Header 7X2
NRST
S1
C11
0.1uF

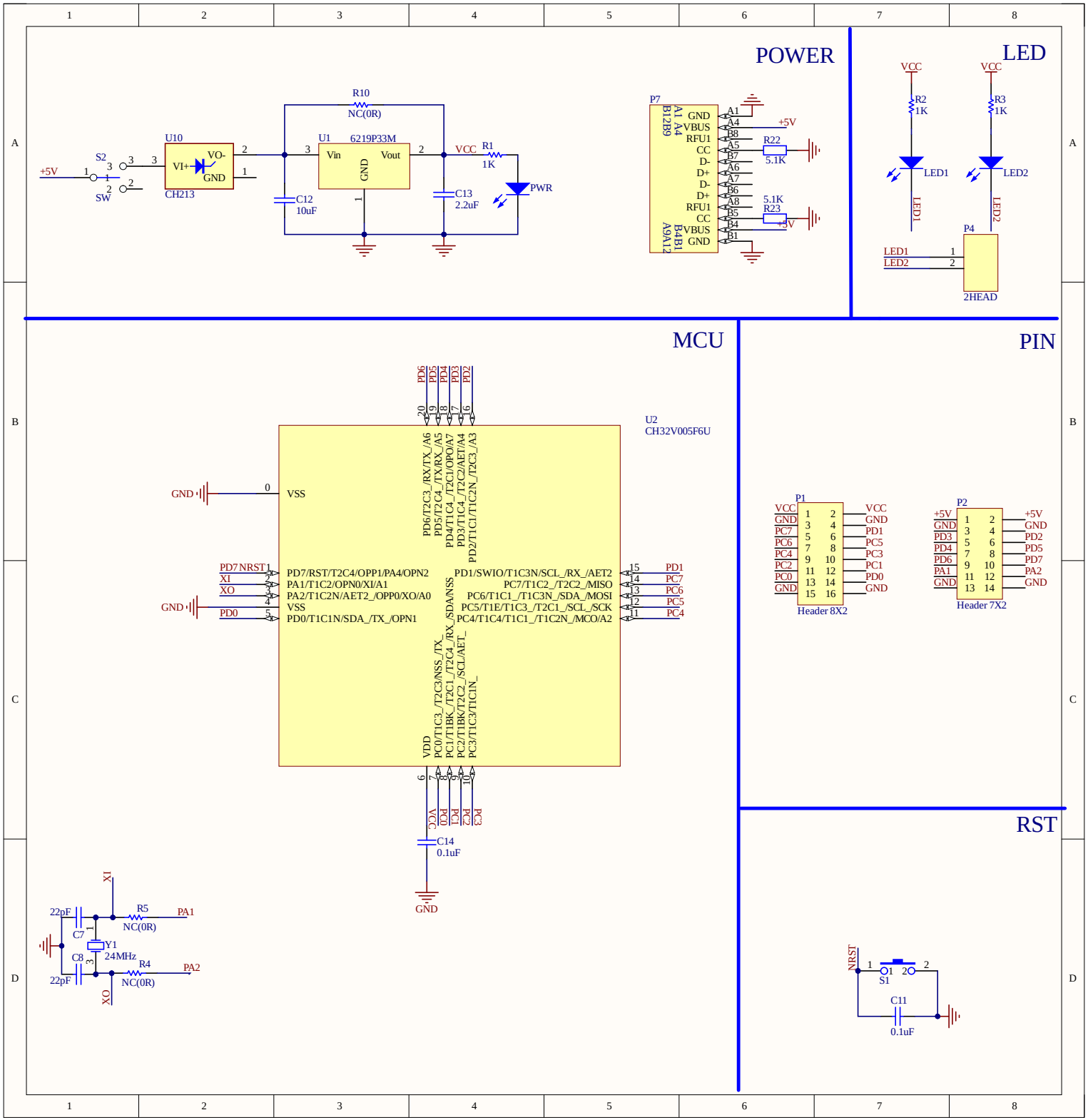
POWER
LED
MCU
PIN
RST
+5V
S2
SW
U10
CH213
VI+
VO-
GND
R10
NC(0R)
U1
6219P33M
Vin
Vout
GND
VCC
R1
1K
C12
10uF
C13
2.2uF
PWR
P7
GND
VBUS
RFU1
CC
D-
D+
D-
D+
RFU1
CC
VBUS
GND
A1 A4
B12B9
B4B1
A9A12
R22
5.1K
R23
5.1K
VCC
R2
1K
R3
1K
LED1
LED2
P4
2HEAD
U2
CH32V005F6U
VSS
PD7/RST/T2C4/OPP1/PA4/OPN2
PA1/T1C2/OPN0/XI/A1
PA2/T1C2N/AET2_/OPP0/XO/A0
VSS
PD0/T1C1N/SDA_/TX_/OPN1
PD1/SWIO/T1C3N/SCL_/RX_/AET2
PC7/T1C2_/T2C2_/MISO
PC6/T1C1_/T1C3N_/SDA_/MOSI
PC5/T1E/T1C3_/T2C1_/SCL_/SCK
PC4/T1C4/T1C1_/T1C2N_/MCO/A2
VDD
C14
0.1uF
GND
NRST
XI
XO
PD6
PD5
PD4
PD3
PD2
PD1
PC7
PC6
PC5
PC4
PC3
PA1
PA2
R5
NC(0R)
R4
NC(0R)
22pF
C7
C8
Y1
24MHz
P1
Header 8X2
P2
Header 7X2
S1
C11
0.1uF

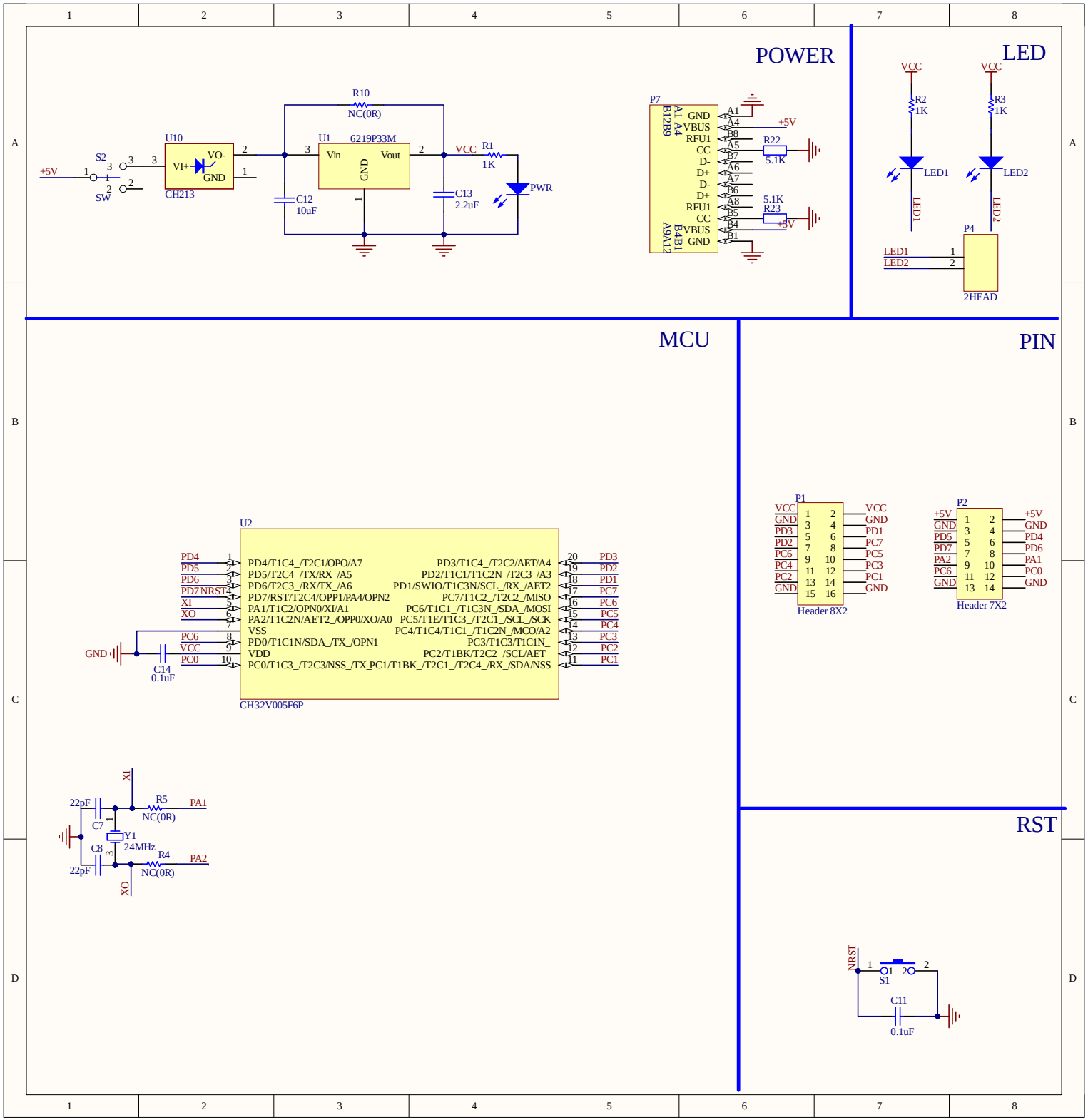
POWER
LED
MCU
PIN
RST
+5V
S2
SW
U10
CH213
VI+
VO-
GND
R10
NC(0R)
U1
6219P33M
Vin
Vout
GND
C12
10uF
VCC
R1
1K
C13
2.2uF
PWR
P7
GND
VBUS
RFU1
CC
D-
D+
R22
5.1K
R23
5.1K
R2
1K
R3
1K
LED1
LED2
P4
2HEAD
U2
CH32V005F6P
PD4/T1C4_/T2C1/OPO/A7
PD5/T2C4_/TX/RX_/A5
PD6/T2C3_/RX/TX_/A6
PD7/RST/T2C4/OPP1/PA4/OPN2
PA1/T1C2/OPN0/XI/A1
PA2/T1C2N/AET2_/OPP0/XO/A0
VSS
PD0/T1C1N/SDA_/TX_/OPN1
VDD
PC0/T1C3_/T2C3/NSS_/TX_PC1/T1BK_/T2C1_/T2C4_/RX_/SDA/NSS
PD3/T1C4_/T2C2/AET/A4
PD2/T1C1/T1C2N_/T2C3_/A3
PD1/SWIO/T1C3N/SCL_/RX_/AET2
PC7/T1C2_/T2C2_/MISO
PC6/T1C1_/T1C3N_/SDA_/MOSI
PC5/T1E/T1C3_/T2C1_/SCL_/SCK
PC4/T1C4/T1C1_/T1C2N_/MCO/A2
PC3/T1C3/T1C1N_
PC2/T1BK/T2C2_/SCL/AET_
PC1
C14
0.1uF
22pF
C7
C8
Y1
24MHz
R5
NC(0R)
R4
NC(0R)
XI
XO
PA1
PA2
P1
Header 8X2
P2
Header 7X2
NRST
S1
C11
0.1uF

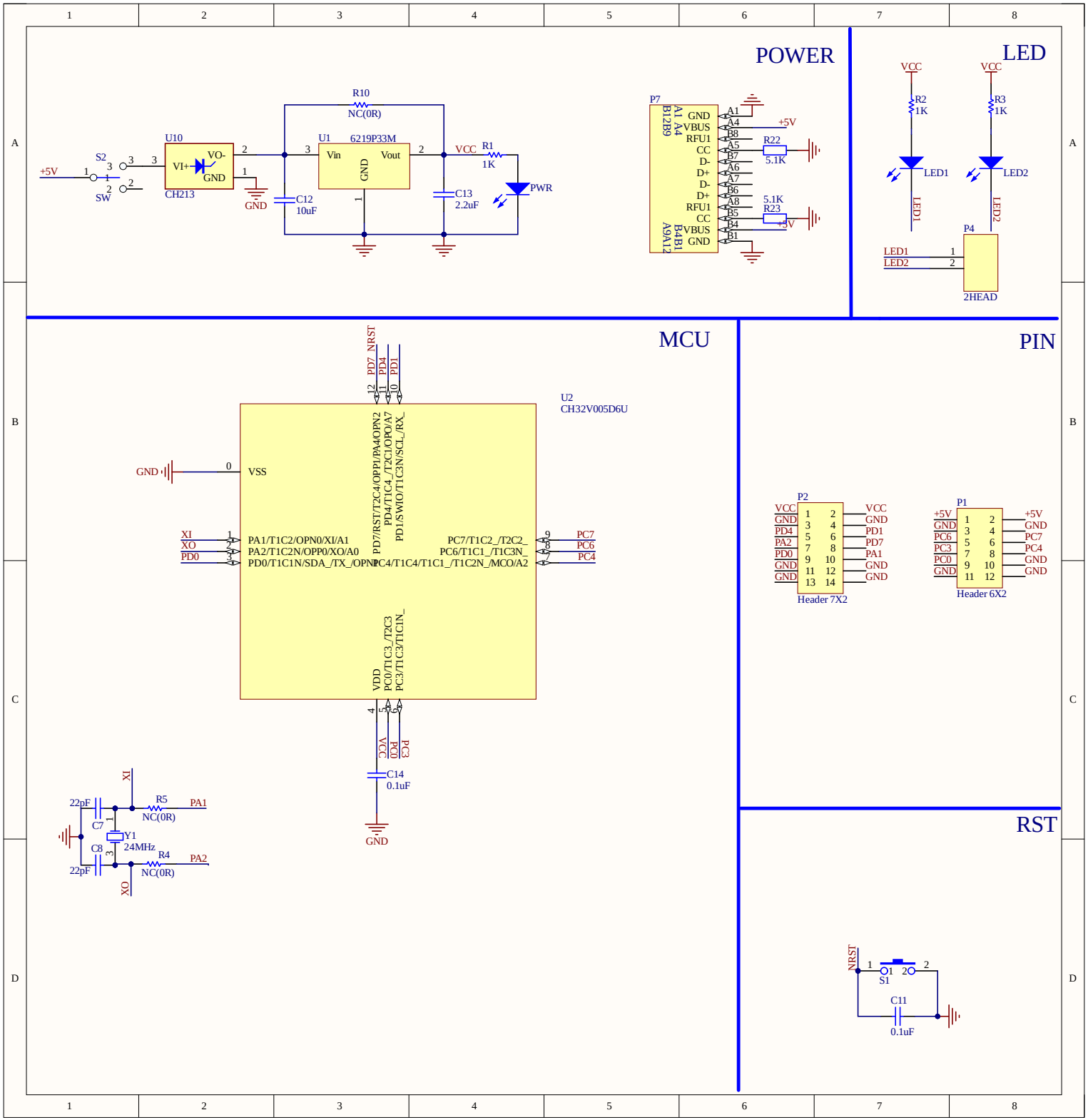
POWER
LED
MCU
PIN
RST
+5V
S2
SW
U10
CH213
VI+
VO-
GND
R10
NC(0R)
U1
6219P33M
Vin
Vout
VCC
R1
1K
C12
10uF
C13
2.2uF
PWR
P7
R22
5.1K
R23
5.1K
R2
1K
R3
1K
LED1
LED2
P4
2HEAD
U2
CH32V005D6U
VSS
PA1/T1C2/OPN0/XI/A1
PA2/T1C2N/OPP0/XO/A0
PD0/T1C1N/SDA_/TX_/OPN
PD7/RST/T2G4/OPP1/PA4/OPN2
PD4/T1C4_/T2C1/OPO/A7
PD1/SWIO/T1C3N/SCL_/RX_
PC7/T1C2_/T2C2_
PC6/T1C1_/T1C3N_
PC4/T1C4/T1C1_/T1C2N_/MCO/A2
VDD
PC0/T1C3_/T2C3
PC3/T1C3/T1C1N_
C14
0.1uF
XI
XO
PD0
PC7
PC6
PC4
PD7
PD4
PD1
NRST
PA1
PA2
R5
NC(0R)
R4
NC(0R)
C7
C8
22pF
Y1
24MHz
P2
Header 7X2
P1
Header 6X2
S1
C11
0.1uF

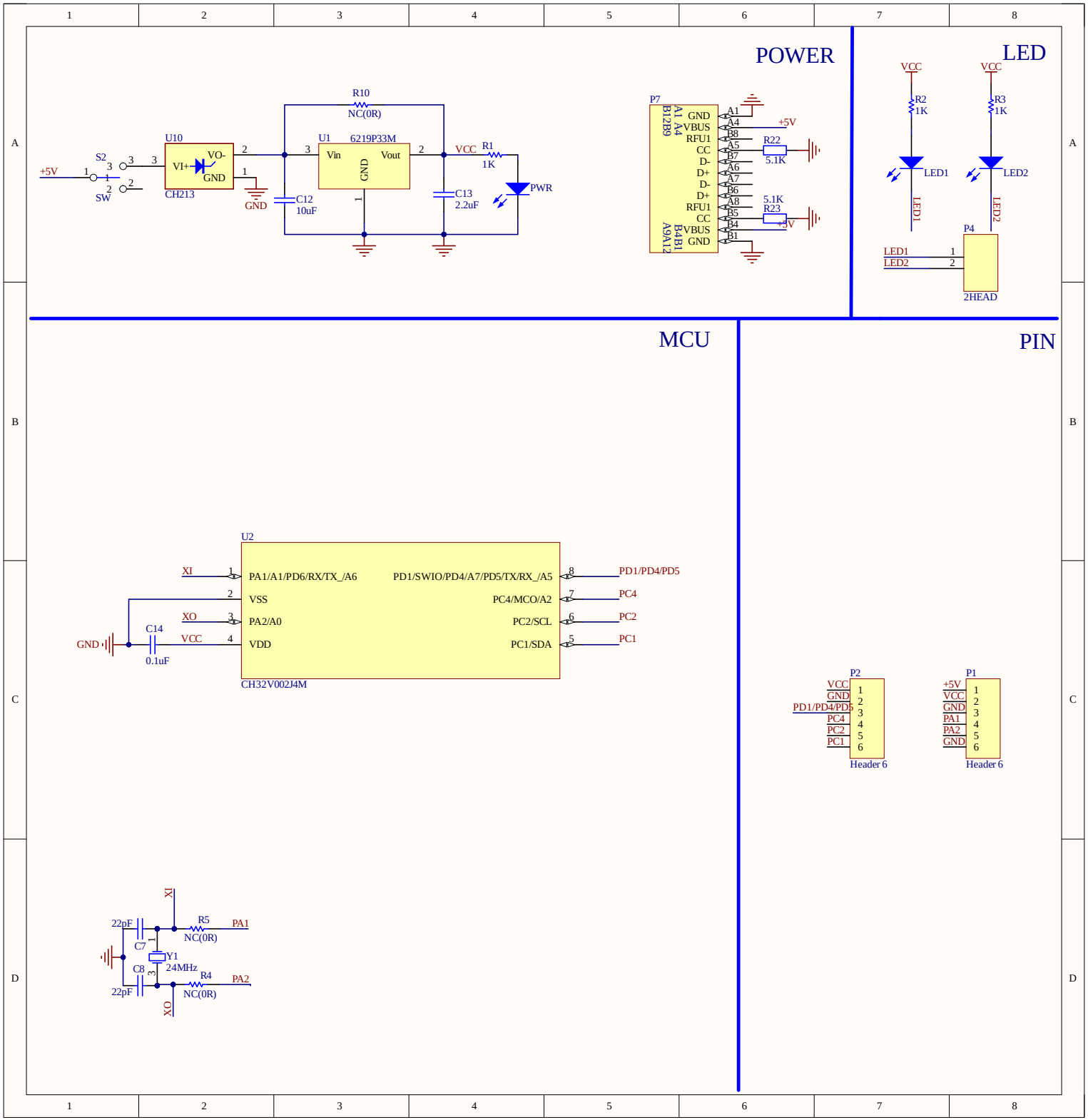
POWER
LED
MCU
PIN
R10
NC(0R)
U10
CH213
VI+
VO-
GND
S2
SW
+5V
U1
6219P33M
Vin
Vout
GND
VCC
R1
1K
PWR
C12
10uF
C13
2.2uF
P7
GND
VBUS
RFU1
CC
D-
D+
R22
5.1K
R23
5.1K
VCC
R2
1K
R3
1K
LED1
LED2
P4
2HEAD
U2
CH32V002J4M
XI
XO
VSS
VDD
PA1/A1/PD6/RX/TX_/A6
PA2/A0
PD1/SWIO/PD4/A7/PD5/TX/RX_/A5
PC4/MCO/A2
PC2/SCL
PC1/SDA
PD1/PD4/PD5
PC4
PC2
PC1
C14
0.1uF
22pF
C7
C8
Y1
24MHz
R5
R4
PA1
PA2
P2
Header 6
P1
Header 6

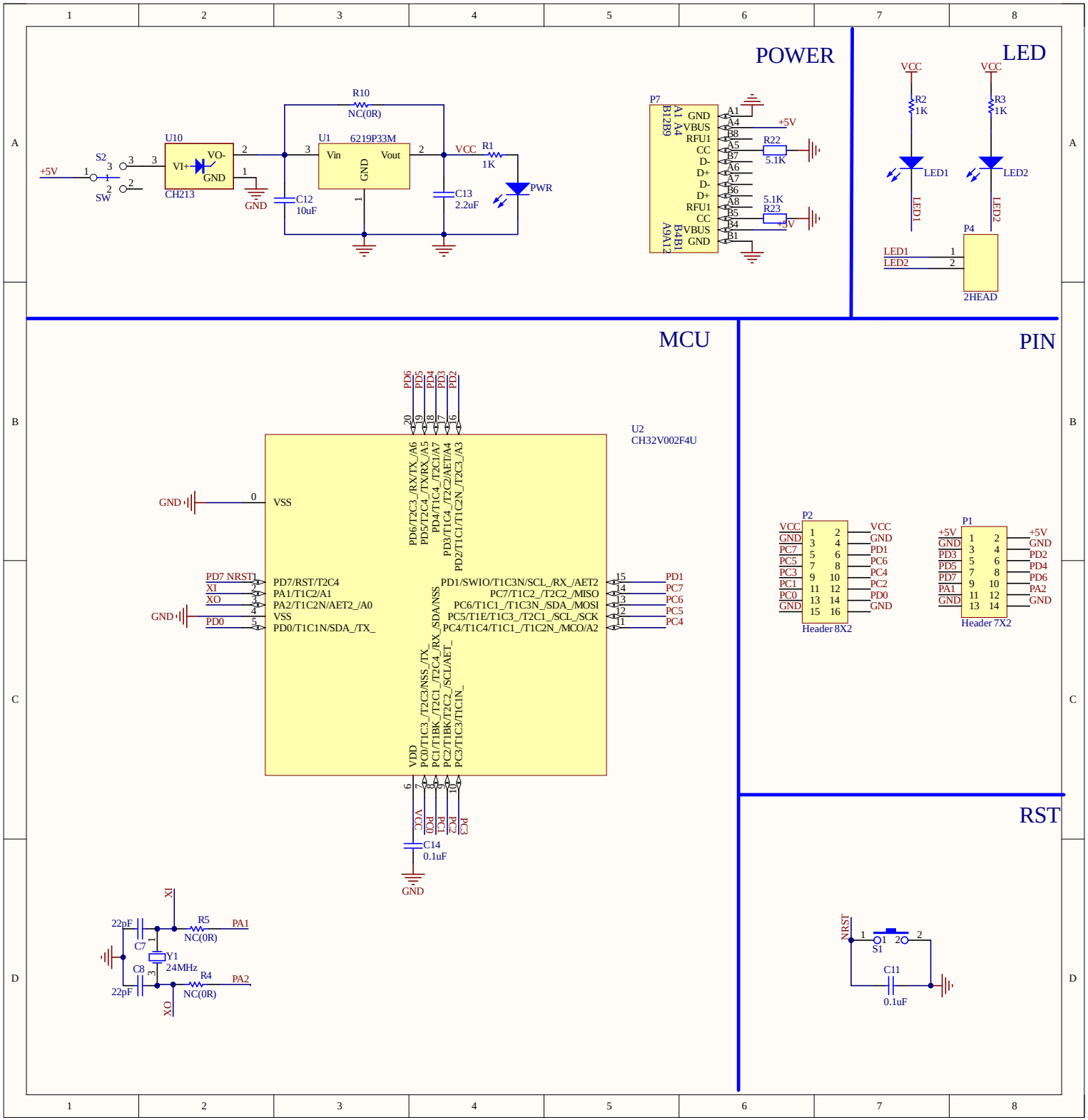
POWER
LED
MCU
PIN
RST
R10
NC(0R)
U10
CH213
VI+
VO-
GND
S2
SW
+5V
U1
6219P33M
Vin
Vout
GND
VCC
R1
1K
PWR
C12
10uF
C13
2.2uF
P7
GND
VBUS
RFU1
CC
D-
D+
RFU1
CC
VBUS
GND
R22
5.1K
R23
5.1K
R2
1K
R3
1K
LED1
LED2
P4
2HEAD
U2
CH32V002F4U
VSS
PD7 NRST
XI
XO
PD0
PD7/RST/T2C4
PA1/T1C2/A1
PA2/T1C2N/AET2_/A0
VSS
PD0/T1C1N/SDA_/TX_
PD1/SWIO/T1C3N/SCL_/RX_/AET2
PC7/T1C2_/T2C2_/MISO
PC6/T1C1_/T1C3N_/SDA_/MOSI
PC5/T1E/T1C3_/T2C1_/SCL_/SCK
PC4/T1C4/T1C1_/T1C2N_/MCO/A2
PD1
PC7
PC6
PC5
PC4
VDD
C14
0.1uF
22pF
C7
C8
Y1
24MHz
R5
NC(0R)
R4
NC(0R)
PA1
PA2
P2
Header 8X2
P1
Header 7X2
NRST
S1
C11
0.1uF

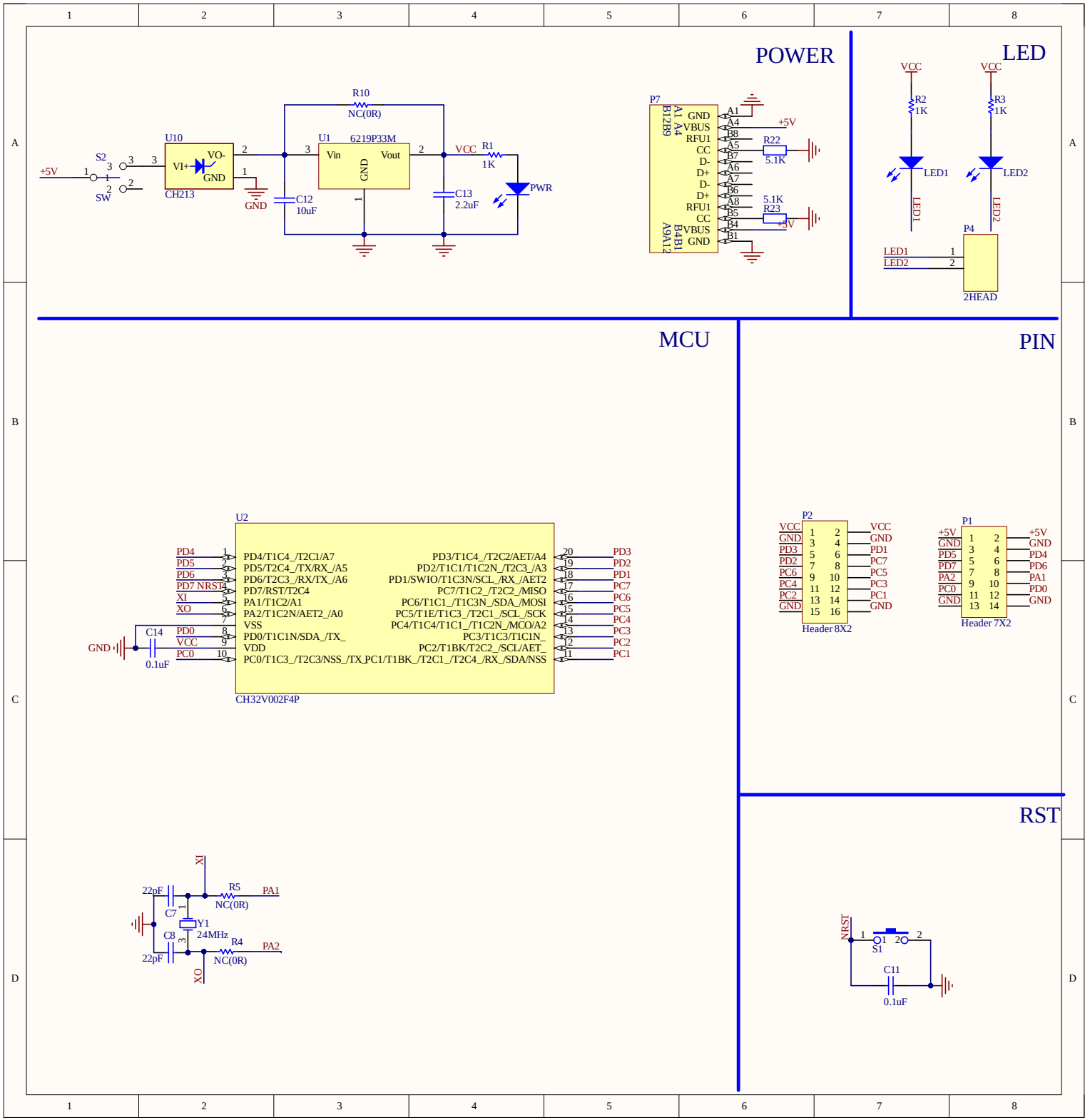
POWER
LED
MCU
PIN
RST
+5V
S2
SW
U10
CH213
VI+
VO-
GND
R10
NC(0R)
U1
6219P33M
Vin
Vout
GND
VCC
R1
1K
C12
10uF
C13
2.2uF
PWR
P7
GND
VBUS
RFU1
CC
D-
D+
R22
5.1K
R23
5.1K
R2
1K
R3
1K
LED1
LED2
P4
2HEAD
U2
CH32V002F4P
PD4/T1C4_/T2C1/A7
PD5/T2C4_/TX/RX_/A5
PD6/T2C3_/RX/TX_/A6
PD7/RST/T2C4
PA1/T1C2/A1
PA2/T1C2N/AET2_/A0
VSS
PD0/T1C1N/SDA_/TX_
VDD
PC0/T1C3_/T2C3/NSS_/TX_PC1/T1BK_/T2C1_/T2C4_/RX_/SDA/NSS
PD3/T1C4_/T2C2/AET/A4
PD2/T1C1/T1C2N_/T2C3_/A3
PD1/SWIO/T1C3N/SCL_/RX_/AET2
PC7/T1C2_/T2C2_/MISO
PC6/T1C1_/T1C3N_/SDA_/MOSI
PC5/T1E/T1C3_/T2C1_/SCL_/SCK
PC4/T1C4/T1C1_/T1C2N_/MCO/A2
PC3/T1C3/T1C1N_
PC2/T1BK/T2C2_/SCL/AET_
C14
0.1uF
XI
XO
R5
NC(0R)
R4
NC(0R)
C7
C8
Y1
24MHz
22pF
PA1
PA2
P2
Header 8X2
P1
Header 7X2
NRST
S1
C11
0.1uF

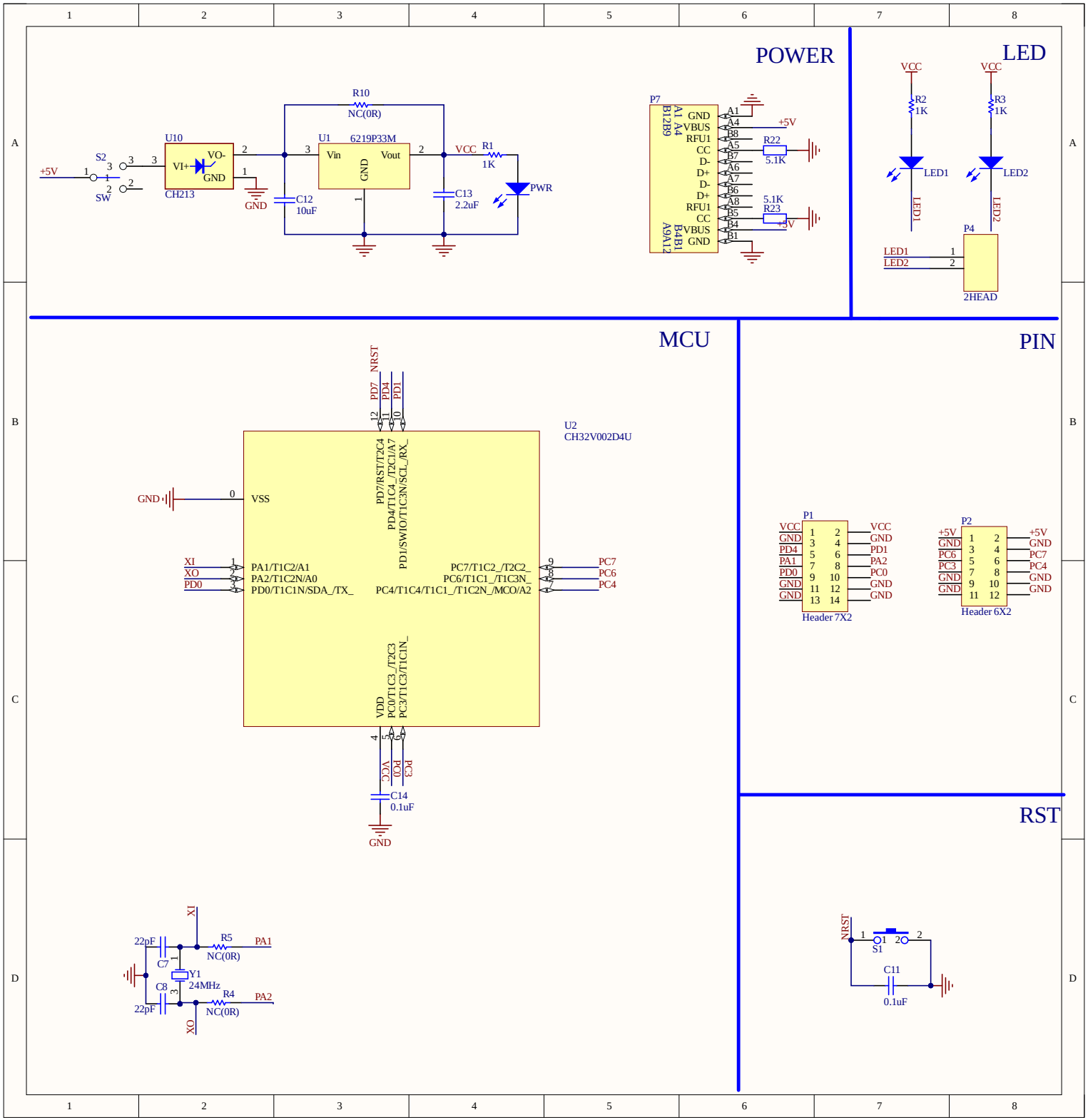
POWER
LED
MCU
PIN
RST
+5V
S2
SW
U10
CH213
VI+
VO-
GND
R10
NC(0R)
U1
6219P33M
Vin
Vout
GND
C12
10uF
VCC
R1
1K
C13
2.2uF
PWR
P7
GND
VBUS
RFU1
CC
D-
D+
RFU1
CC
VBUS
GND
R22
5.1K
R23
5.1K
R2
1K
R3
1K
LED1
LED2
P4
2HEAD
U2
CH32V002D4U
VSS
PD7/RST/T2C4
PD4/T1C4_/T2C1/A7
PD1/SWIO/T1C3N/SCL_/RX_
PA1/T1C2/A1
PA2/T1C2N/A0
PD0/T1C1N/SDA_/TX_
PC7/T1C2_/T2C2_
PC6/T1C1_/T1C3N_
PC4/T1C4/T1C1_/T1C2N_/MCO/A2
VDD
PC0/T1C3_/T2C3
PC3/T1C3/T1C1N_
NRST
PD7
PD4
PD1
XI
XO
PD0
PC7
PC6
PC4
C14
0.1uF
22pF
C7
C8
Y1
24MHz
R5
NC(0R)
R4
NC(0R)
PA1
PA2
P1
Header 7X2
P2
Header 6X2
S1
C11
0.1uF

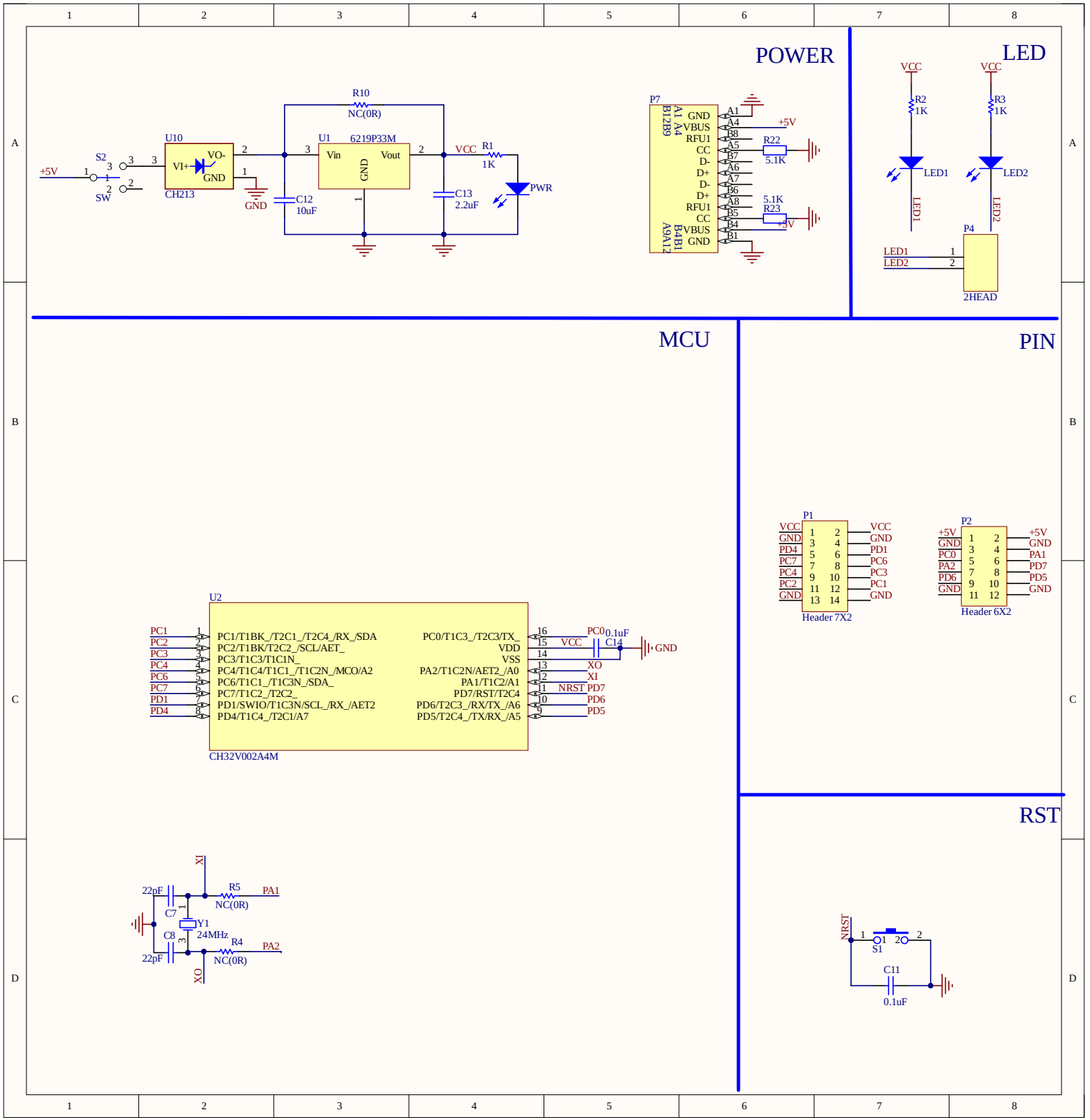
POWER
LED
MCU
PIN
RST
+5V
S2
SW
U10
CH213
VI+
VO-
GND
C12
10uF
R10
NC(0R)
U1
6219P33M
Vin
Vout
VCC
R1
1K
C13
2.2uF
PWR
P7
GND
VBUS
RFU1
CC
D-
D+
R22
5.1K
R23
5.1K
R2
1K
R3
1K
LED1
LED2
P4
2HEAD
U2
CH32V002A4M
PC1/T1BK_/T2C1_/T2C4_/RX_/SDA
PC2/T1BK/T2C2_/SCL/AET_
PC3/T1C3/T1C1N_
PC4/T1C4/T1C1_/T1C2N_/MCO/A2
PC6/T1C1_/T1C3N_/SDA_
PC7/T1C2_/T2C2_
PD1/SWIO/T1C3N/SCL_/RX_/AET2
PD4/T1C4_/T2C1/A7
PC0/T1C3_/T2C3/TX_
VDD
VSS
PA2/T1C2N/AET2_/A0
PA1/T1C2/A1
PD7/RST/T2C4
PD6/T2C3_/RX/TX_/A6
PD5/T2C4_/TX/RX_/A5
C14
0.1uF
XI
XO
NRST
R5
NC(0R)
R4
NC(0R)
C7
C8
22pF
Y1
24MHz
PA1
PA2
P1
Header 7X2
P2
Header 6X2
S1
C11
0.1uF

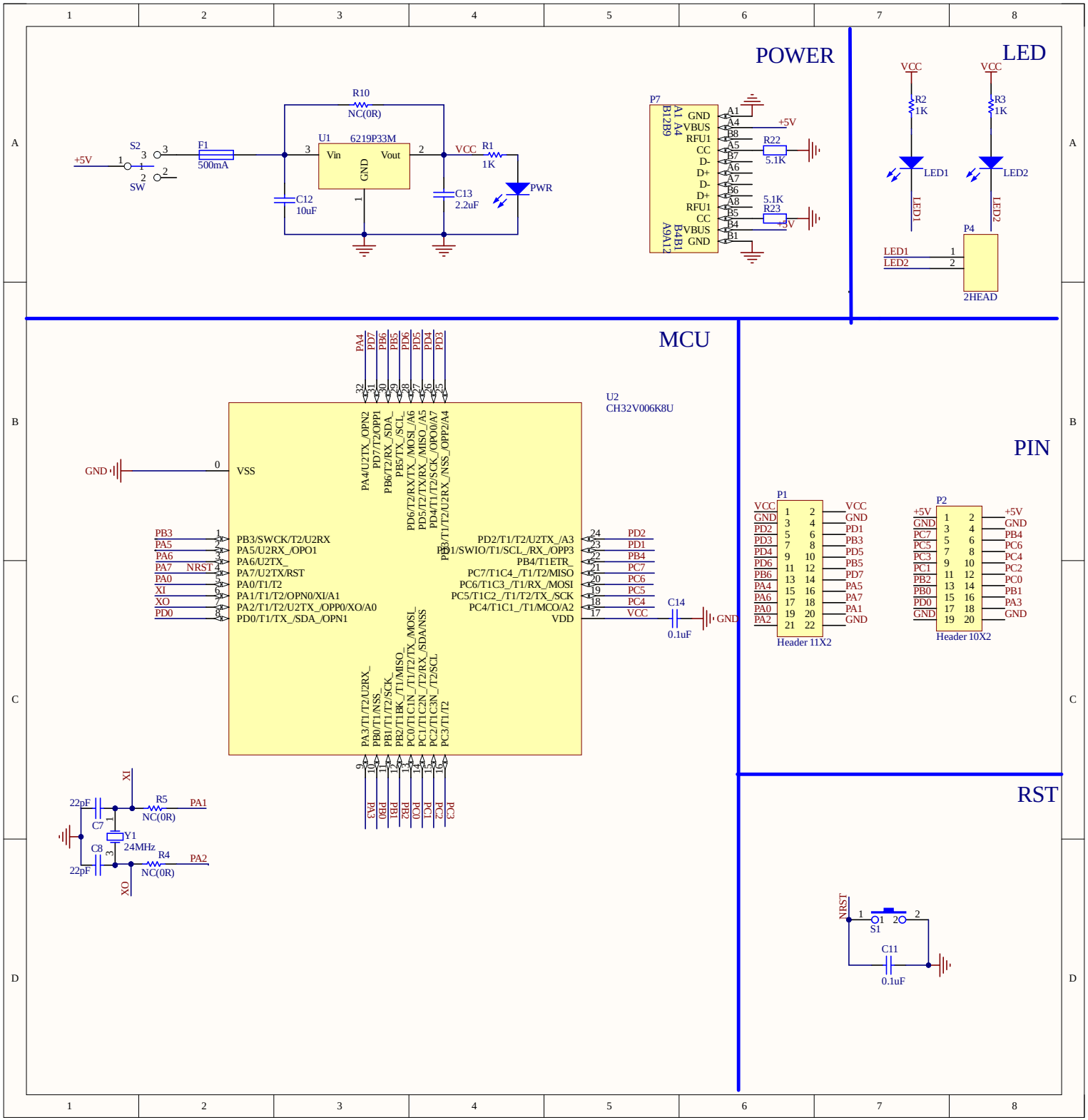
POWER
LED
MCU
PIN
RST
R10
NC(0R)
S2
SW
+5V
F1
500mA
U1
6219P33M
Vin
Vout
GND
VCC
R1
1K
C12
10uF
C13
2.2uF
PWR
P7
GND
VBUS
RFU1
CC
D-
D+
RFU1
R22
5.1K
R23
5.1K
R2
1K
R3
1K
LED1
LED2
P4
2HEAD
U2
CH32V006K8U
VSS
PB3/SWCK/T2/U2RX
PA5/U2RX_/OPO1
PA6/U2TX_
PA7/U2TX/RST
PA0/T1/T2
PA1/T1/T2/OPN0/XI/A1
PA2/T1/T2/U2TX_/OPP0/XO/A0
PD0/T1/TX_/SDA_/OPN1
PD2/T1/T2/U2TX_/A3
PD1/SWIO/T1/SCL_/RX_/OPP3
PB4/T1ETR_
PC7/T1C4_/T1/T2/MISO
PC6/T1C3_/T1/RX_/MOSI
PC5/T1C2_/T1/T2/TX_/SCK
PC4/T1C1_/T1/MCO/A2
VDD
C14
0.1uF
P1
Header 11X2
P2
Header 10X2
XI
XO
22pF
C7
C8
Y1
24MHz
R5
NC(0R)
R4
NC(0R)
PA1
PA2
NRST
S1
C11
0.1uF