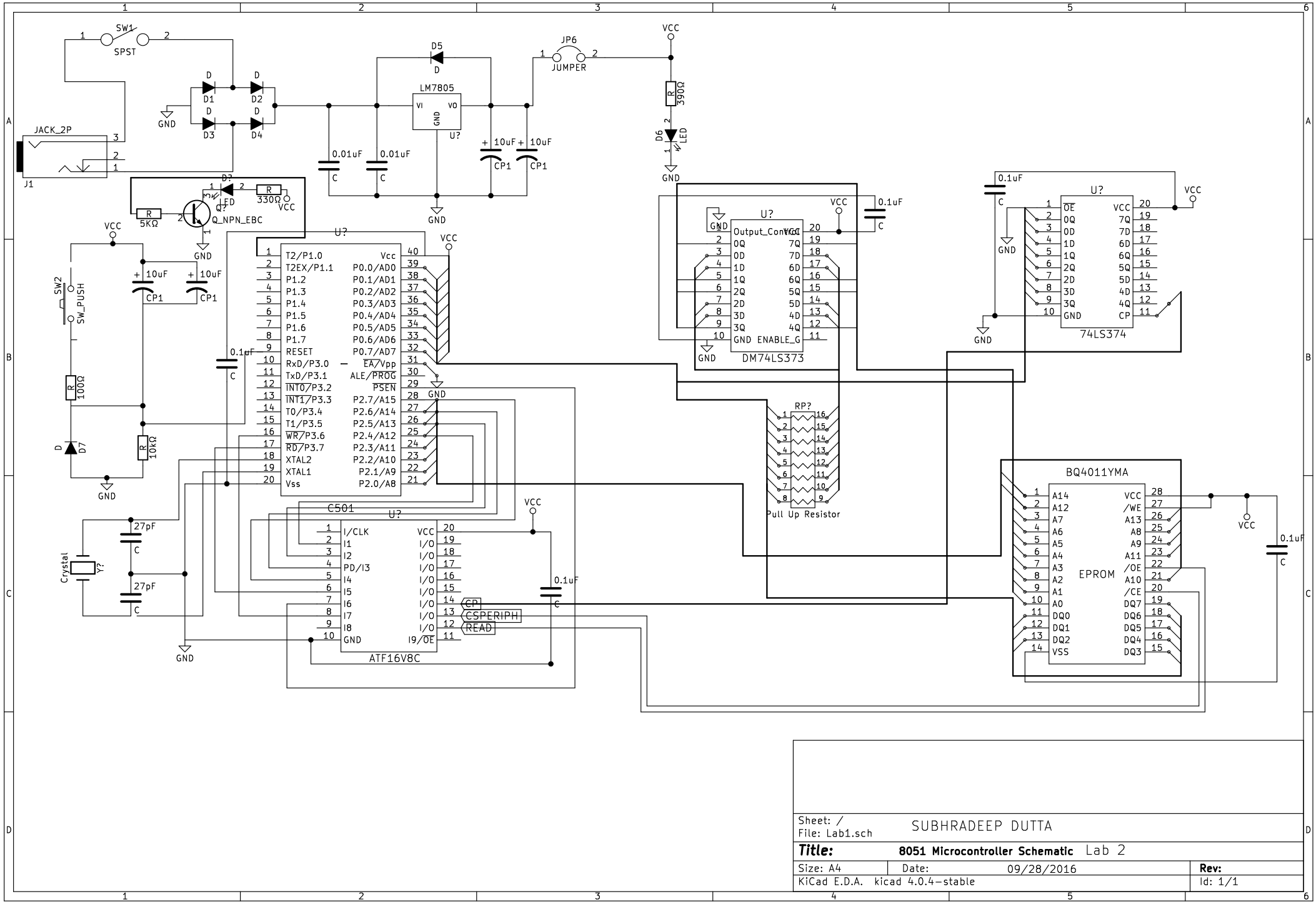


Sheet: /
File: Lab1.sch

SUBHRADEEP DUTTA

**Title:** **8051 Microcontroller Schematic** Lab 2

| Size: A4 | Date: 09/28/2016 | Rev: |
|---|---|---|
| KiCad E.D.A. kicad 4.0.4-stable | | Id: 1/1 |