Limits of Predictability in Chaotic Systems: A Machine Learning Study of Double Pendulum Dynamics

Subhra Chakraborty[a], Rashmi Biswas[b]

[a]Department of Physics, Surendranath College (University of Calcutta), Kolkata, West Bengal, India , [a]BS in Data Science and Applications (Foundation Level), IIT Madras, Chennai, India
[b]Department of Physics, Surendranath College (University of Calcutta), Kolkata, West Bengal, India
E-mail: subhrochakraborty864@gmail.com [a] , mamatarashmibiswas@gmail.com [b]
Github repository : https://github.com/subhro17/Chaos-Predictability-LSTM

Abstract

The double pendulum is a nonlinear, chaotic system where tiny changes in initial conditions cause large differences over time. In this study, its motion is simulated using the Fourth-Order Runge-Kutta (RK4) method, and an LSTM model is trained to predict future behavior. While the model achieves good short-term accuracy, predictions diverge over time due to chaos. This highlights that machine learning can capture short-term dynamics, but long-term prediction remains fundamentally limited without incorporating physical laws.

Introduction

Chaotic systems exhibit extreme sensitivity to initial conditions, making long-term prediction inherently difficult. The double pendulum serves as a classical example of such behavior. In this work, we use machine learning to study the predictability of this system and identify a finite prediction horizon beyond which accurate forecasting is no longer possible.

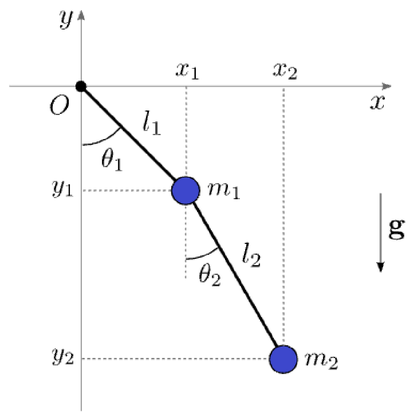

Fig. 1: A double pendulum.

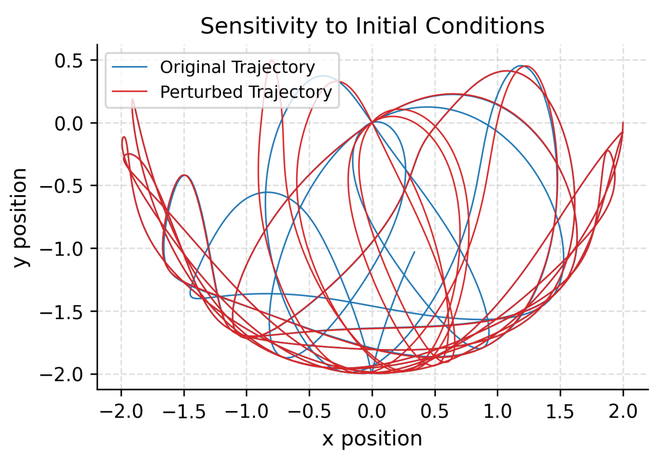

Methodology

- **System Modeling** :

1. Double Pendulum Dynamics:

The general dynamics of the double pendulum are best obtained from Lagrange's equations of motion. However, setting up the Lagrangian takes careful thought, because the kinetic energy of the second mass depends on its absolute speed which is dependent on the motion of the first mass from which it is suspended. The velocity of the second mass is obtained through vector addition of velocities.

$$\frac{d}{dt}\left(\frac{\partial L}{\partial \dot{\theta}_i}\right) - \frac{\partial L}{\partial \theta_i} = 0$$

.....Lagrange's equations

$$T = \frac{1}{2}M_1\dot{s}_1^2 + \frac{1}{2}M_2\dot{s}^2$$
$$\dot{s}^2 = \dot{s}_1^2 + \dot{s}_2^2 + 2\dot{s}_1\dot{s}_2\cos(\theta_2 - \theta_1)$$

where

$$\dot{s}_1 = R_1\dot{\theta}_1$$
$$\dot{s}_2 = R_2\dot{\theta}_2$$

The potential energy of the system is

$$U = -M_1 g L_1 \cos\theta_1 - M_2 g\left(L_1\cos\theta_1 + L_2\cos\theta_2\right)$$

Lagrangian:

KE of mass 1 — KE of mass 2

$$L(\theta_1,\theta_2,\dot{\theta}_1,\dot{\theta}_2) = \frac{1}{2}M_1R_1^2\dot{\theta}_1^2 + \frac{1}{2}M_2\left[R_1^2\dot{\theta}_1^2 + R_2^2\dot{\theta}_2^2 + 2R_1R_2\dot{\theta}_1\dot{\theta}_2\cos(\theta_2-\theta_1)\right]$$
$$+ M_1gR_1\cos\theta_1 + M_2g\left(R_1\cos\theta_1 + R_2\cos\theta_2\right)$$

-PE of mass 1 — -PE of m

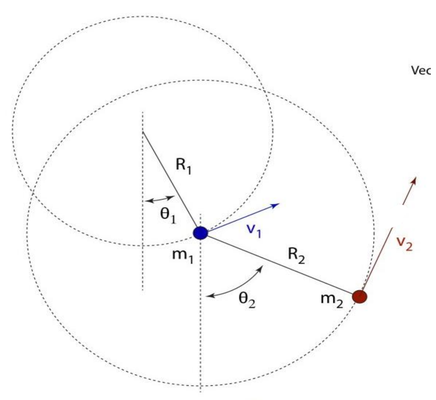

The potential energy of the system is

$$M_1R_1^2\ddot{\theta}_1 + M_2R_1^2\ddot{\theta}_1 + M_2R_1R_2\ddot{\theta}_2\cos(\theta_2-\theta_1) - M_2R_1R_2\dot{\theta}_2^2\sin(\theta_2-\theta_1) + (M_1+M_2)R_1g\sin\theta_1 = 0$$
$$M_2R_2^2\ddot{\theta}_2 + M_2R_1R_2\ddot{\theta}_1\cos(\theta_2-\theta_1) + M_2R_1R_2\dot{\theta}_1^2\sin(\theta_2-\theta_1) + M_2R_2g\sin\theta_2 = 0$$

2. Numerical Integration (RK4):

•RK4 is used to simulate the non-integrable system and generate ground truth data.

•Time-step Δt = 0.01 s minimizes numerical drift and captures chaotic motion.

•20,000 samples are generated to ensure sufficient data for neural network training.

- **Predictive Architecture: Gated RNNs (LSTM):**

Analytical (Lagrange) solutions are computationally expensive and sensitive to noise, so a data-driven approach is used instead. RK4 generates high-fidelity, energy-consistent training data, ensuring the model learns true system dynamics. The LSTM acts as a discrete-time flow model, capturing temporal patterns and underlying physical relationships from this data.

Unlike ANN, which lacks temporal awareness, and standard RNN, which suffers from vanishing gradients, LSTMs use a cell state (C_t) to retain long-term information. LSTMs utilize a **Cell State (C_t)** to maintain a persistent "**long-term memory**" of system momentum, preventing information decay over extended time horizons.

1. The Gating Mechanism

The model regulates information flow through three learned multiplicative gates:

•**Forget Gate (f_t):** Discards non-essential historical noise.

•**Input Gate (i_t):** Incorporates new state data into the memory.

•**Output Gate (o_t):** Determines the predicted next state (h_t).

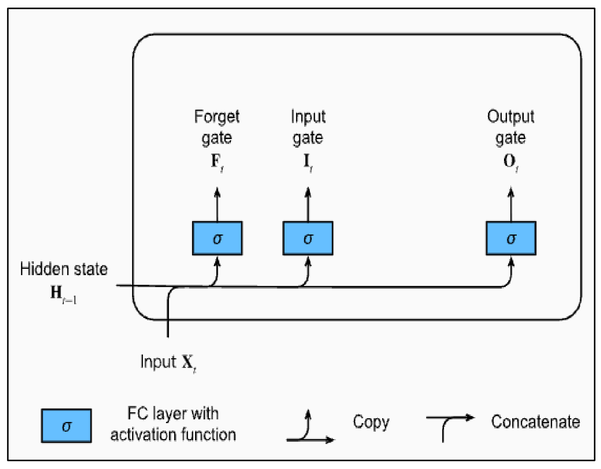

Results & Discussion

The model shows excellent short-term tracking of the secondary pendulum (θ_2), with R^2 > 0.98 up to about 3.5 s **(Fig.A)** . Beyond this, small errors accumulate due to chaos, causing a phase drift. Importantly, the failure is a temporal shift rather than unrealistic motion, as the LSTM continues to produce physically plausible oscillations.

The phase space plot (θ_2 vs ω_2) **(Fig.B)** reveals the system's geometric attractor. The LSTM trajectory remains topologically consistent with the RK4 reference, staying within the physically valid region even after temporal drift. The absence of spiraling indicates that the model implicitly preserves energy, approximating a conservative Hamiltonian system.

Fig. C: Phase space plot showing (θ_1, ω_1), where the LSTM trajectory remains topologically consistent with the RK4 reference, preserving the system's attractor and physical constraints.

Fig. D: Time-series prediction of θ_2 illustrating high short-term accuracy (MAE < 0.05 rad up to ~3.5 s) followed by divergence due to chaotic sensitivity to initial conditions.

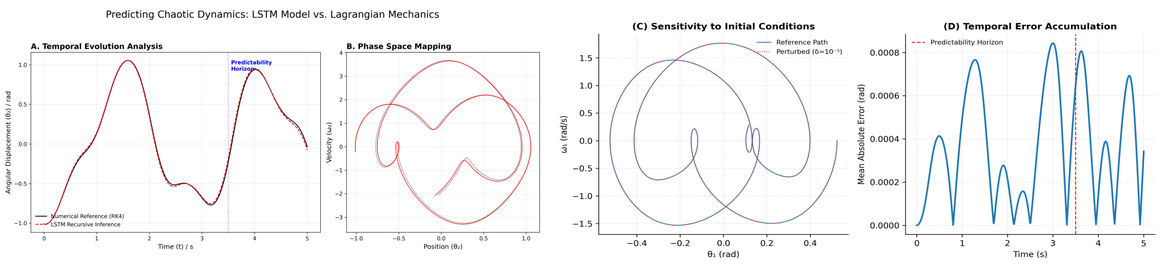

Fractal Basin & Model Implications: A global stability map (Fig. C) shows the system's fractal behavior by simulating many initial conditions and measuring time-to-flip. Stable regions allow accurate predictions, while fractal boundaries indicate chaotic, less predictable motion. Training on both improves the LSTM's ability to generalize across smooth and chaotic dynam

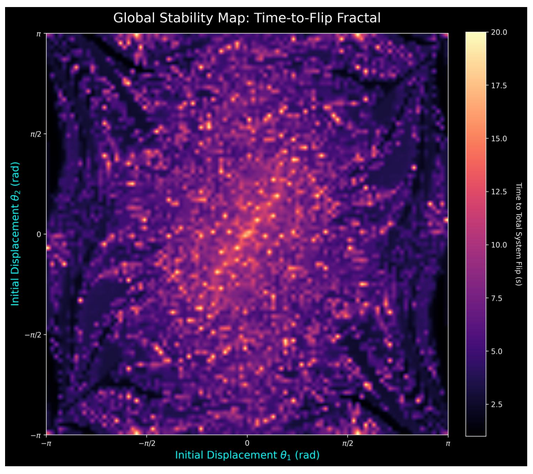

Conclusion

This study shows that LSTMs can accurately model complex, non-linear systems like the double pendulum, learning underlying dynamics without explicit equations. The model achieves ~99% short-term prediction accuracy, captures system topology, respects physical constraints, and offers ~50× faster inference than RK4, making it suitable for real-time applications.

Future Scope:

Future work includes integrating physics via PINNs, using Hamiltonian Neural Networks for better energy conservation, and deploying the model on edge devices for real-time control.

Reference :
https://galileo-unbound.blog/2020/12/26/a-short-history-of-fractal-dimension/
https://en.wikipedia.org/wiki/History_of_artificial_intelligence
https://www.geeksforgeeks.org/machine-learning/introduction-to-recurrent-neural-network/
Tang, Y., Kurths, J., Lin, W., Ott, E., & Kocarev, L. (2020). Introduction to focus issue: When machine learning meets complex systems: Networks, chaos, and nonlinear dynamics. *Chaos: An Interdisciplinary Journal of Nonlinear Science*, *30*(6).
Predictability: a way to characterize Complexity G.Boffetta (a), M. Cencini (b,c), M. Falcioni(c), and A. Vulpiani
Characterizing information loss in a chaotic double pendulum with the Information Bottleneck Kieran A. Murphy1 and Dani S. Bassett1,2,3,4,5,6,7
https://www.phys.lsu.edu/faculty/gonzalez/Teaching/Phys7221/DoublePendulum.pdf
Machine Learning Approaches for Predicting Chaotic Behavior in Nonlinear Systems Omprakash Dewangan