Change Log
Rev A 5/2024
Initial Release

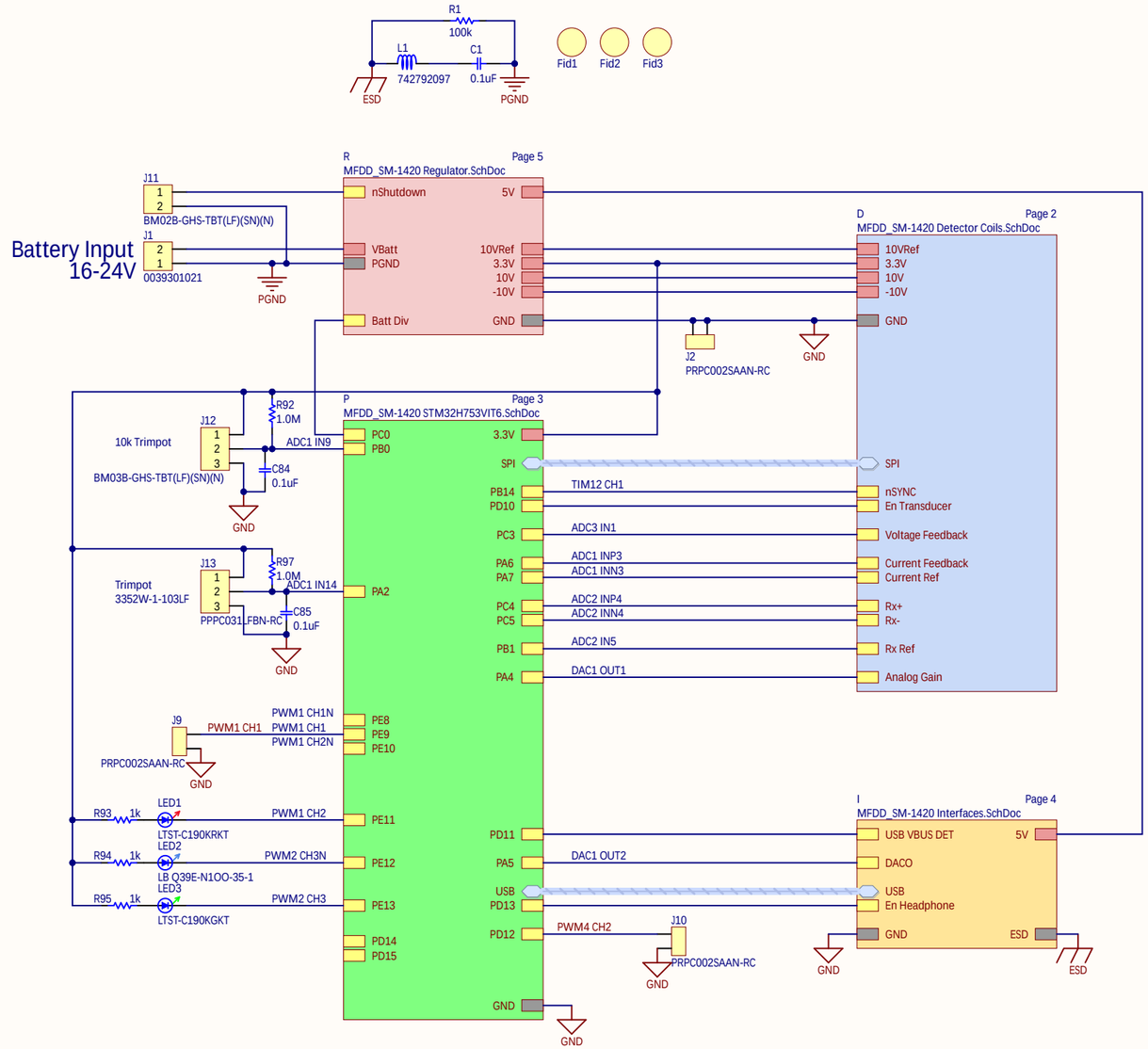

Proprietary and Confidential	Approvals	Initials	Date	Dwg Title: Multi Frequency Detector	SUBURBAN MARINE
The information contained in this drawing is the sole property of Suburban Marine. Any reproduction in part or as a whole without the written permission of Suburban Marine is prohibited.	Drawn	NJW	5/7/2024	Dwg #: SM-1410	Revision: A
	Checked	NJW			
	Mfg Appr			Project:	Page: 1 of 5
	Eng Appr	NJW			
	Special Appr				

7400 Center ave APT 570
Huntington Beach, CA 92647
www.suburbanmarine.io

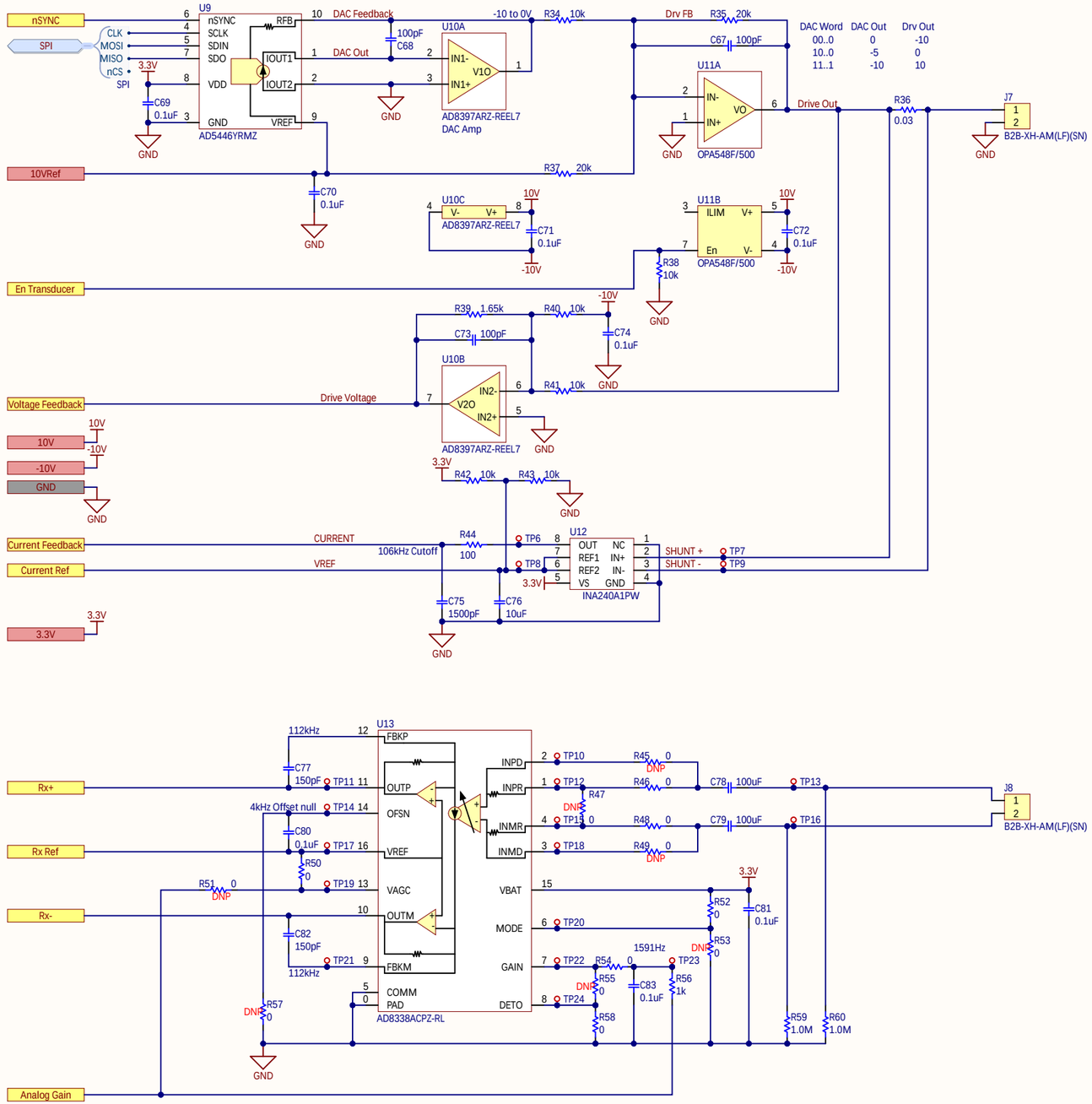

Proprietary and Confidential	Approvals	Initials	Date	Dwg Title: Detector Coil Drivers	SUBURBAN MARINE
The information contained in this drawing is the sole property of Suburban Marine. Any reproduction in part or as a whole without the written permission of Suburban Marine is prohibited.	Drawn	NJW	5/7/2024	Dwg #: SM-1410	7400 Center ave APT 570 Huntington Beach, CA 92647 www.suburbanmarine.io
	Checked	NJW		Revision: A	
	Mfg Appr			Project:	
	Eng Appr	NJW		Page: 2 of 5	
	Special Appr				

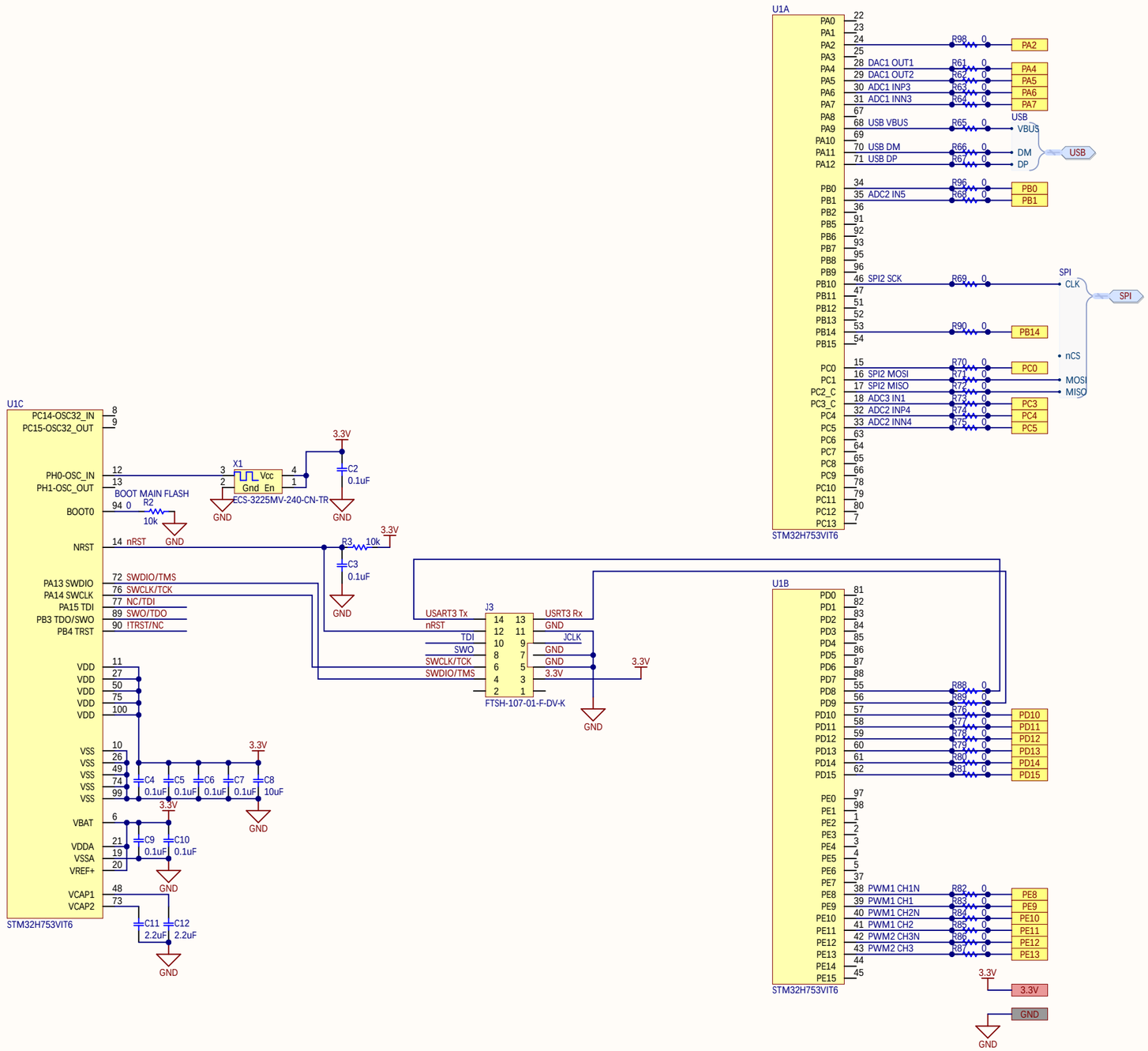

Proprietary and Confidential	Approvals	Initials	Date	Dwg Title: STM32H753VIT6		SUBURBAN MARINE
The information contained in this drawing is the sole property of Suburban Marine. Any reproduction in part or as a whole without the written permission of Suburban Marine is prohibited.	Drawn	NJW	5/7/2024			7400 Center ave APT 570
	Checked	NJW		Dwg #: SM-1410	Revision: A	Huntington Beach, CA 92647
	Mfg Appr					www.suburbanmarine.io
	Eng Appr	NJW		Project:	Page: 3 of 5	
	Special Appr					

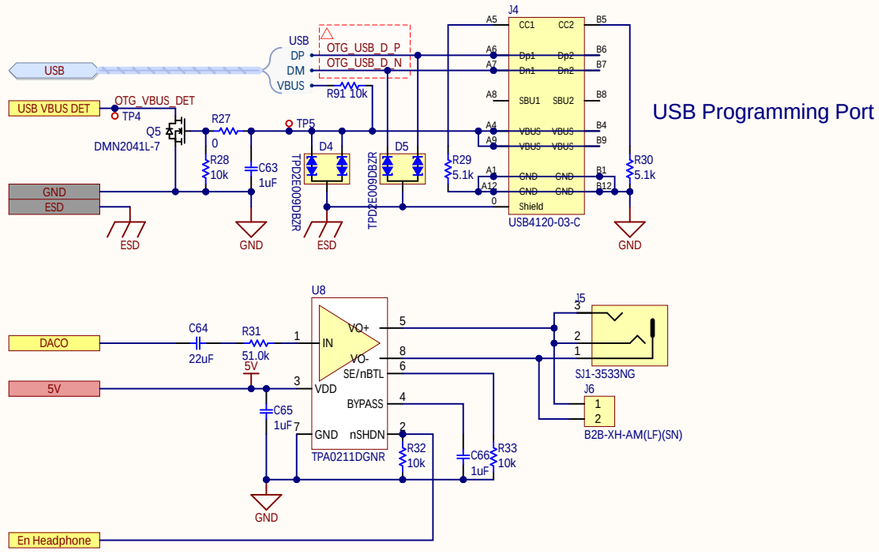

Proprietary and Confidential	Approvals	Initials	Date	Dwg Title: User Interfaces		SUBURBAN MARINE
The information contained in this drawing is the sole property of Suburban Marine. Any reproduction in part or as a whole without the written permission of Suburban Marine is prohibited.	Drawn	NJW	5/7/2024			7400 Center ave APT 570
	Checked	NJW		Dwg #: SM-1410	Revision: A	Huntington Beach, CA 92647
	Mfg Appr					www.suburbanmarine.io
	Eng Appr	NJW		Project:	Page: 4 of 5	
	Special Appr					

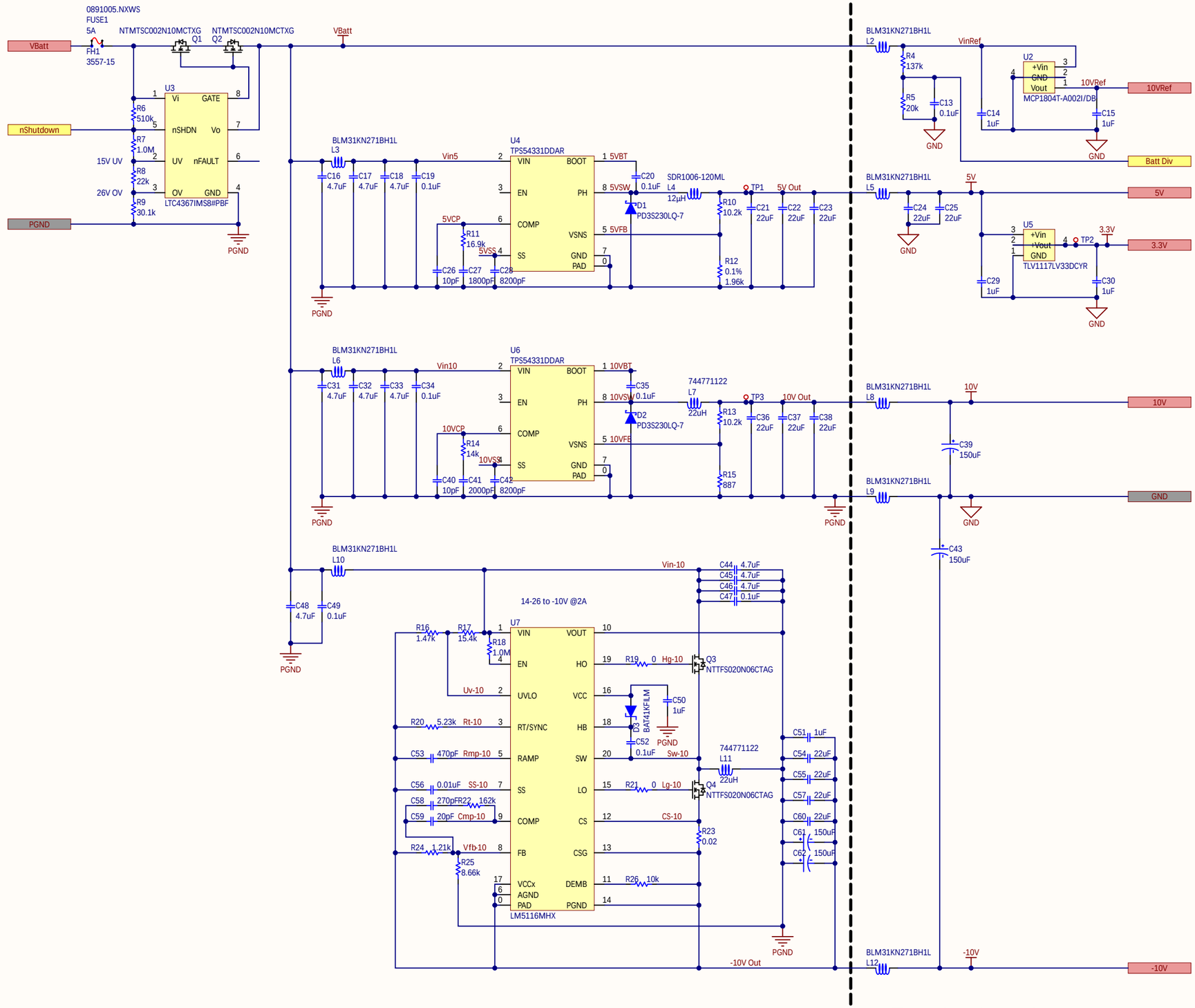

Proprietary and Confidential
The information contained in this drawing is the sole property of Suburban Marine. Any reproduction in part or as a whole without the written permission of Suburban Marine is prohibited.

Approvals	Initials	Date
Drawn	NJW	5/7/2024
Checked	NJW	
Mfg Appr		
Eng Appr	NJW	
Special Appr		

Dwg Title: Voltage Regulators

Dwg #: SM-1410

Revision: A

Project:

Page: 5 of 5

SUBURBAN MARINE
7400 Center ave APT 570
Huntington Beach, CA 92647
www.suburbanmarine.io