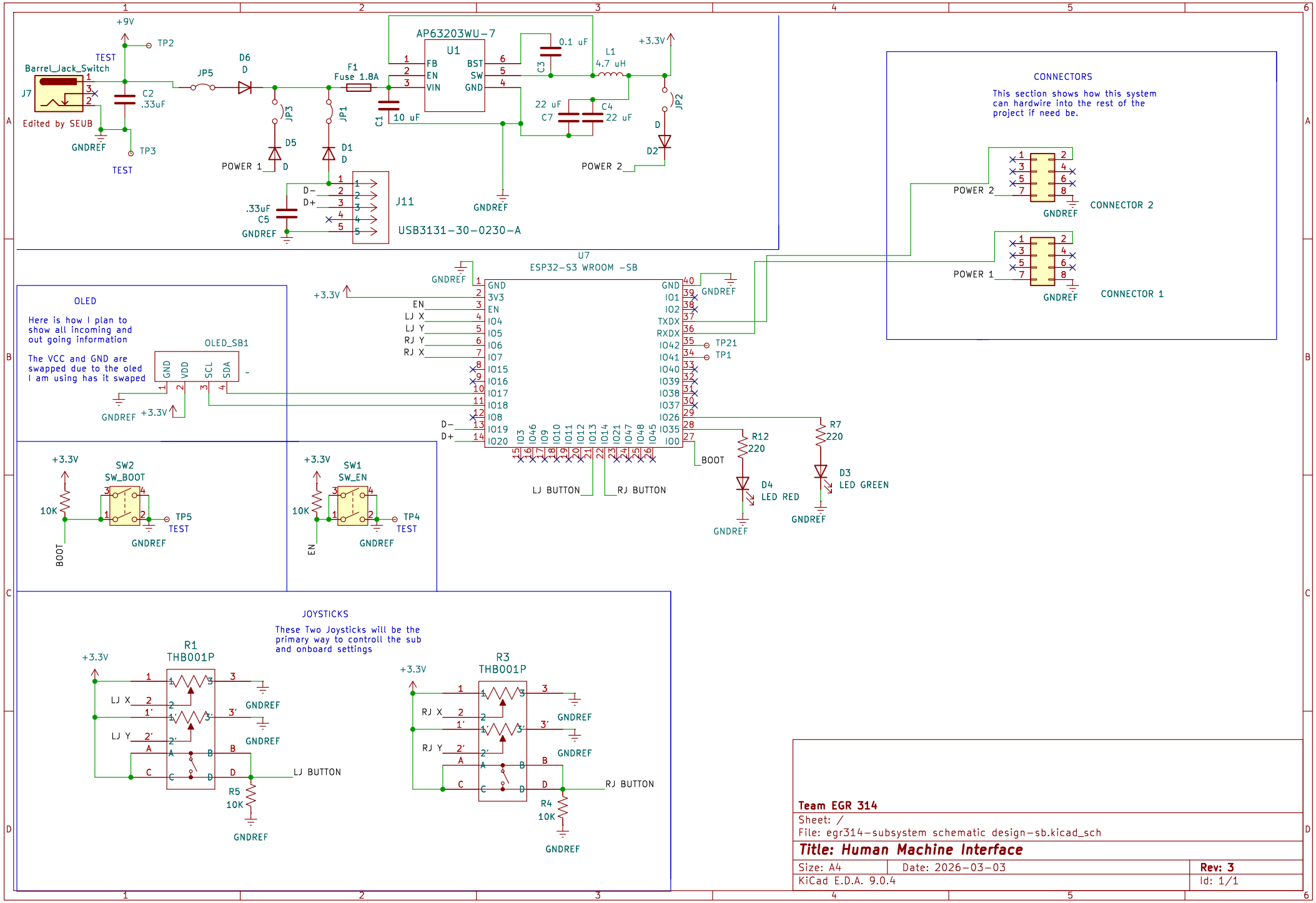

Team EGR 314

Sheet: /

File: egr314-subsystem schematic design-sb.kicad_sch

Title: Human Machine Interface

Size: A4	Date: 2026-03-03	**Rev: 3**
KiCad E.D.A. 9.0.4		Id: 1/1