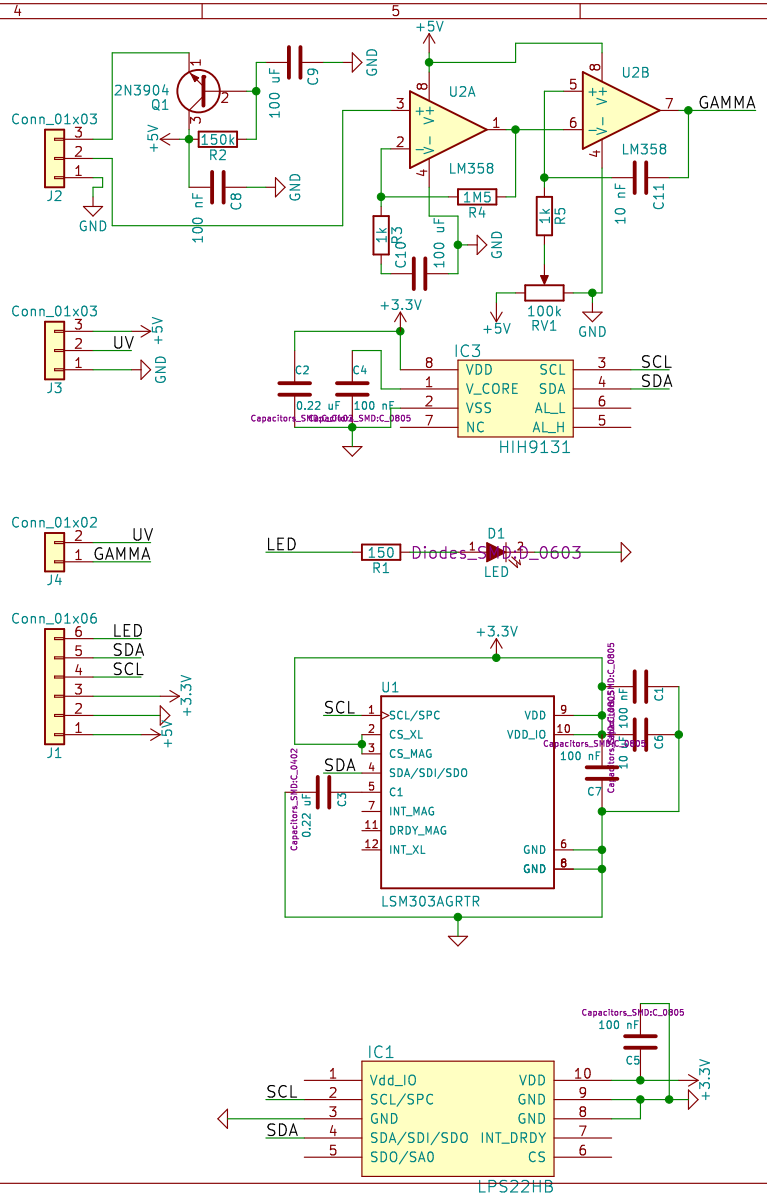

Sheet: /
File: top.sch

Title: noname.sch

Size: A4	Date: 3 jan 2018	Rev:
KiCad E.D.A. eeschema 4.0.7		Id: 1/1