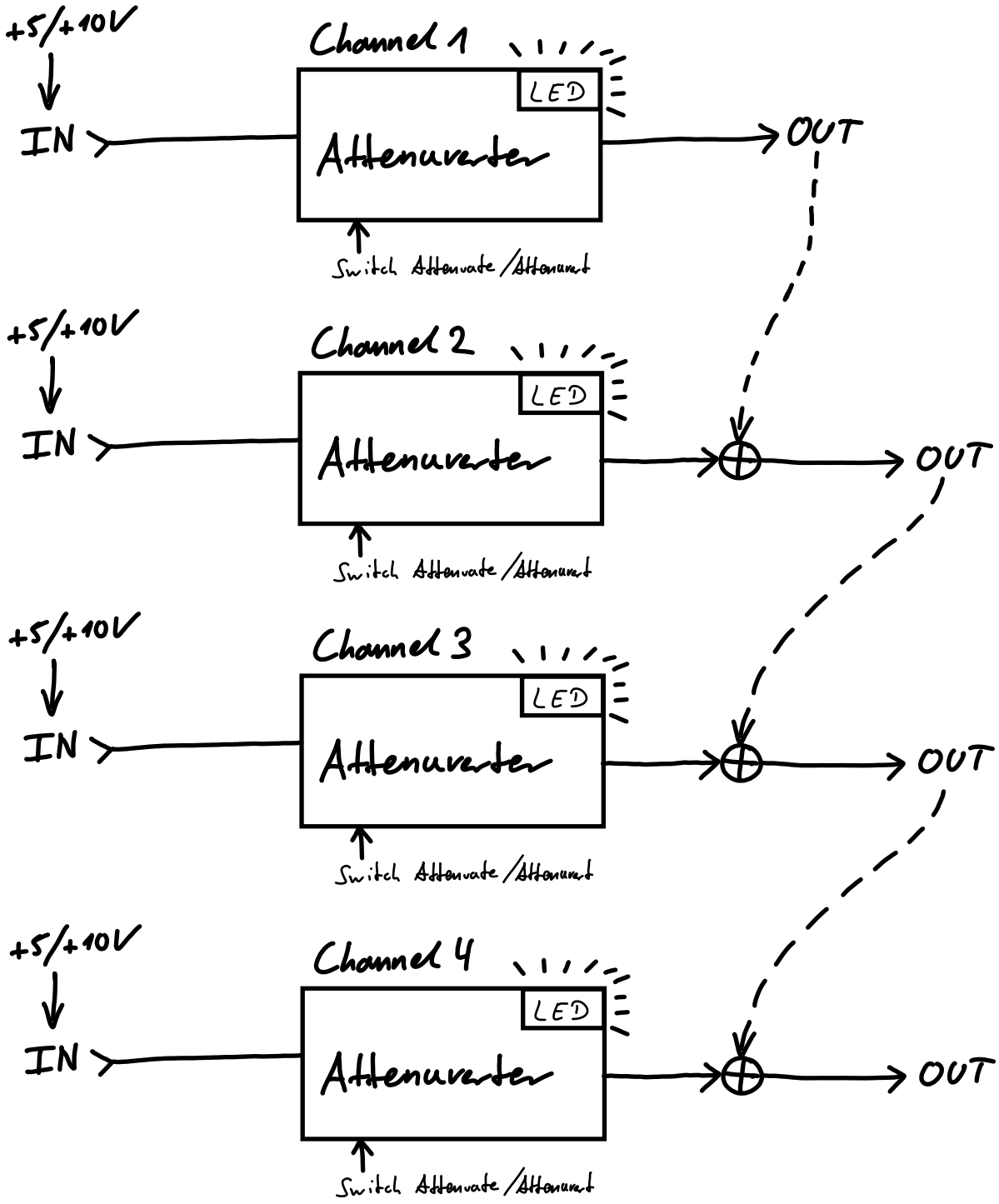
+5/+10V
IN
Channel 1
LED
Attenuverter
OUT
Switch Attenuate/Attenuvert
+5/+10V
IN
Channel 2
LED
Attenuverter
OUT
Switch Attenuate/Attenuvert
+5/+10V
IN
Channel 3
LED
Attenuverter
OUT
Switch Attenuate/Attenuvert
+5/+10V
IN
Channel 4
LED
Attenuverter
OUT
Switch Attenuate/Attenuvert

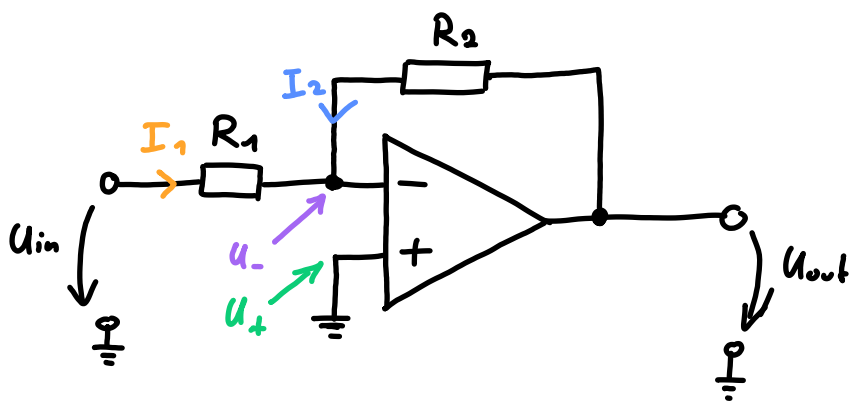

OPamp Rule 1:

$U_- = U_+ = 0V$

$\rightsquigarrow I_1 = \frac{U_{in}}{R_1}, \quad I_2 = \frac{U_{out}}{R_2}$

OPamp Rule 2:

$I_2 = -I_1$

$\rightsquigarrow \frac{U_{out}}{R_2} = -\frac{U_{in}}{R_1}$

$\rightsquigarrow U_{out} = U_{in} \cdot \left(-\frac{R_2}{R_1}\right)$

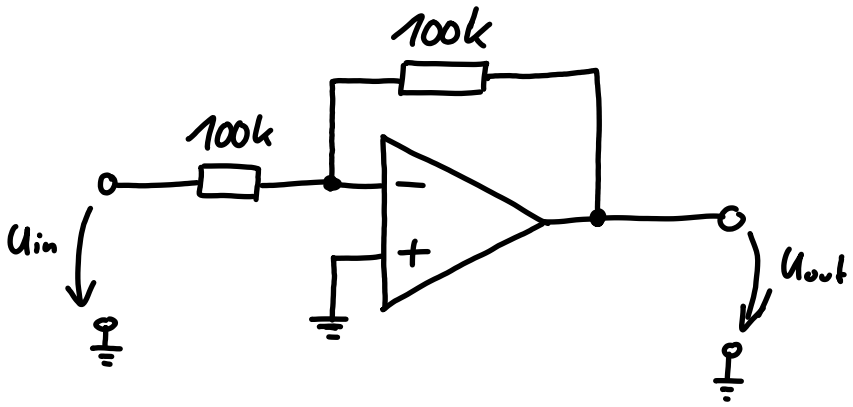

$U_{out} = -U_{in}$

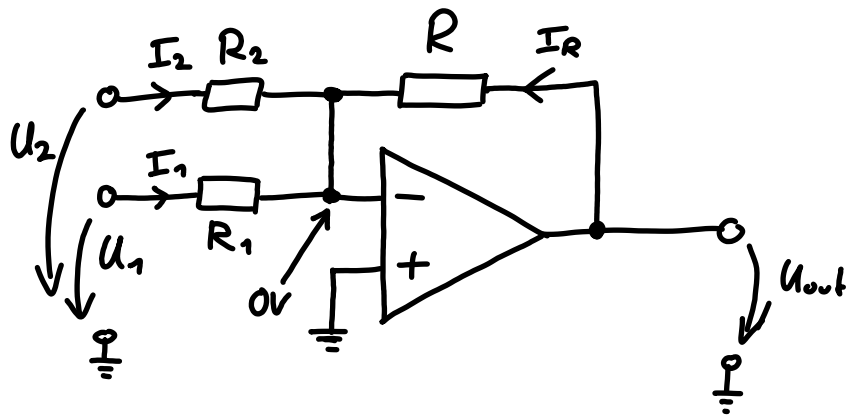

$I_R = -(I_1 + I_2)$

$I_1 = \frac{U_1}{R_1}, \quad I_2 = \frac{U_2}{R_2}.$

$I_R = \frac{U_{out}}{R}$

$\rightsquigarrow U_{out} = -\left(U_1 \cdot \frac{R}{R_1} + U_2 \cdot \frac{R}{R_2}\right)$

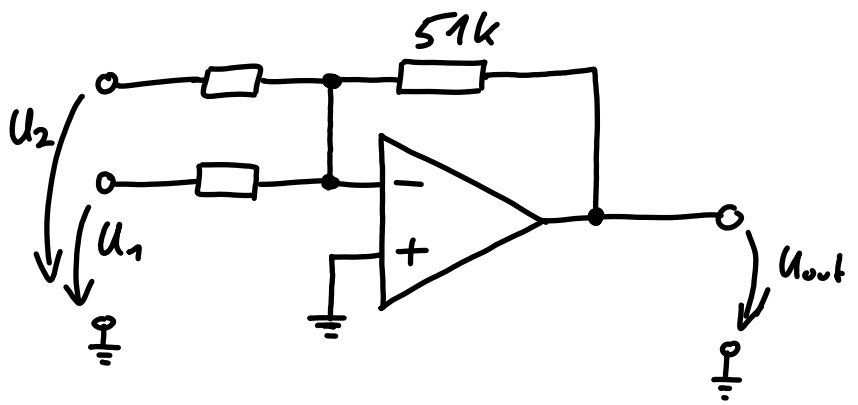

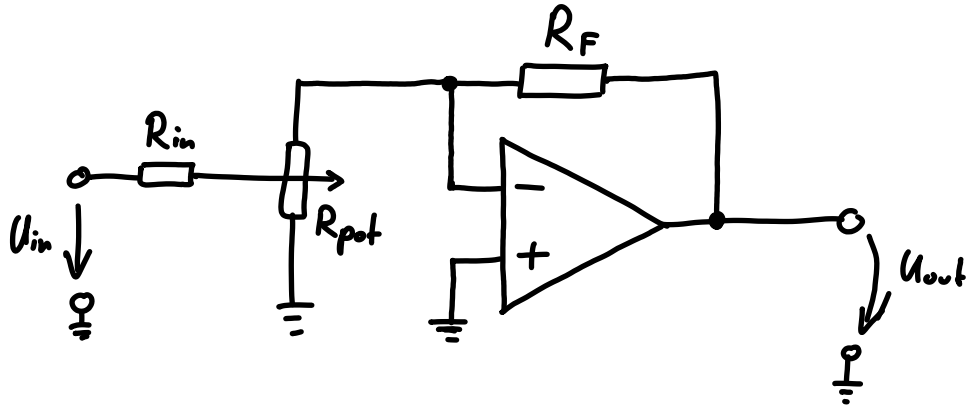

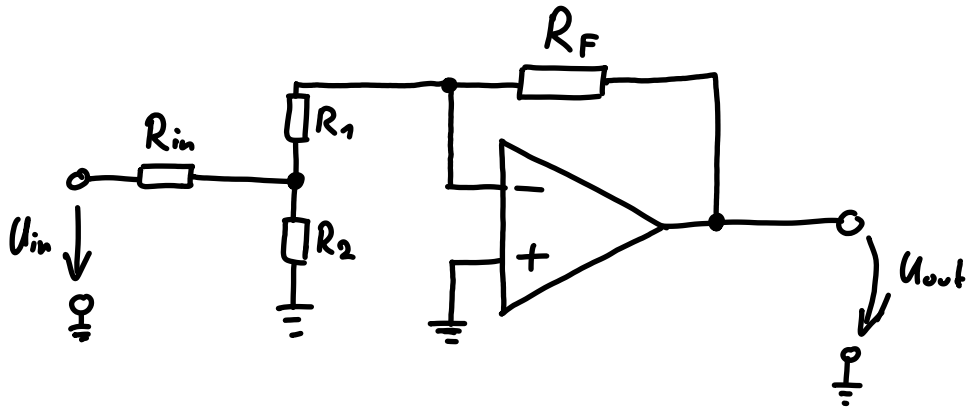

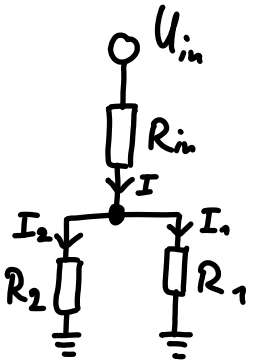

$$I = I_1 + I_2$$

$$I_1 = R_2/R_1 \cdot I_2$$

$$I_2 = R_1/R_2 \cdot I_1$$

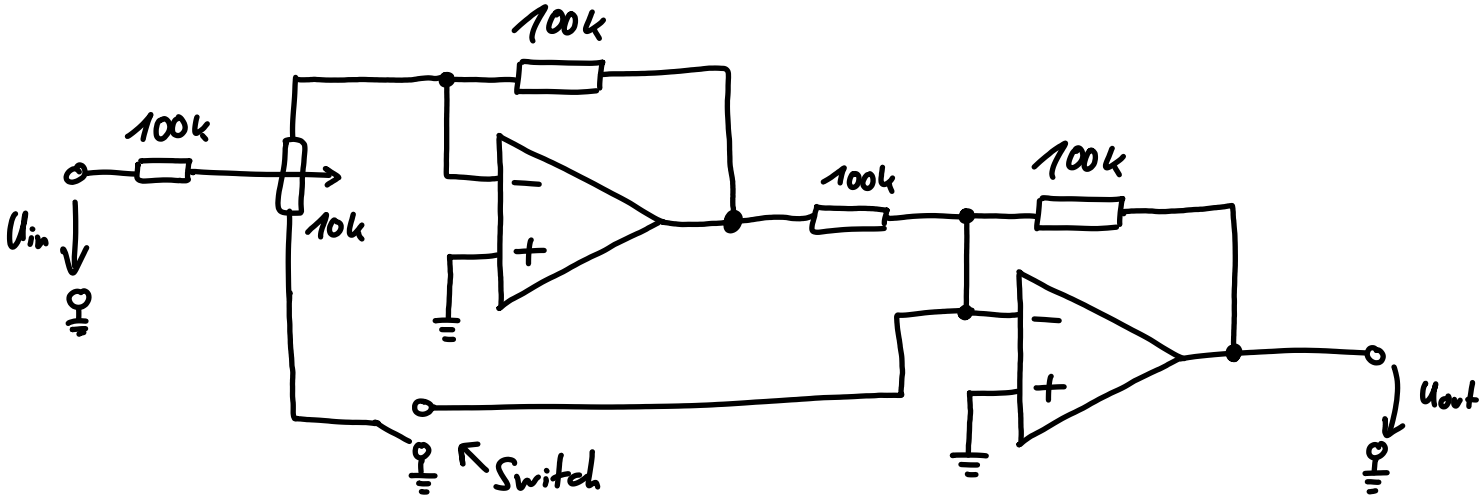

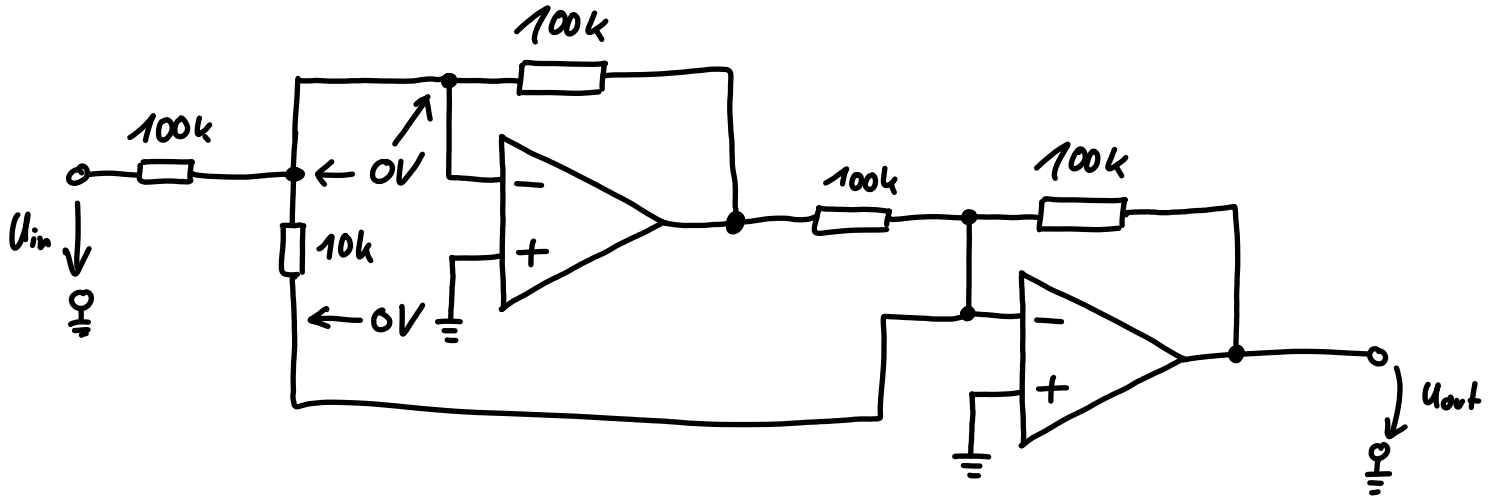
100k
100k
0V
10k
0V
100k
100k
Uin
Uout

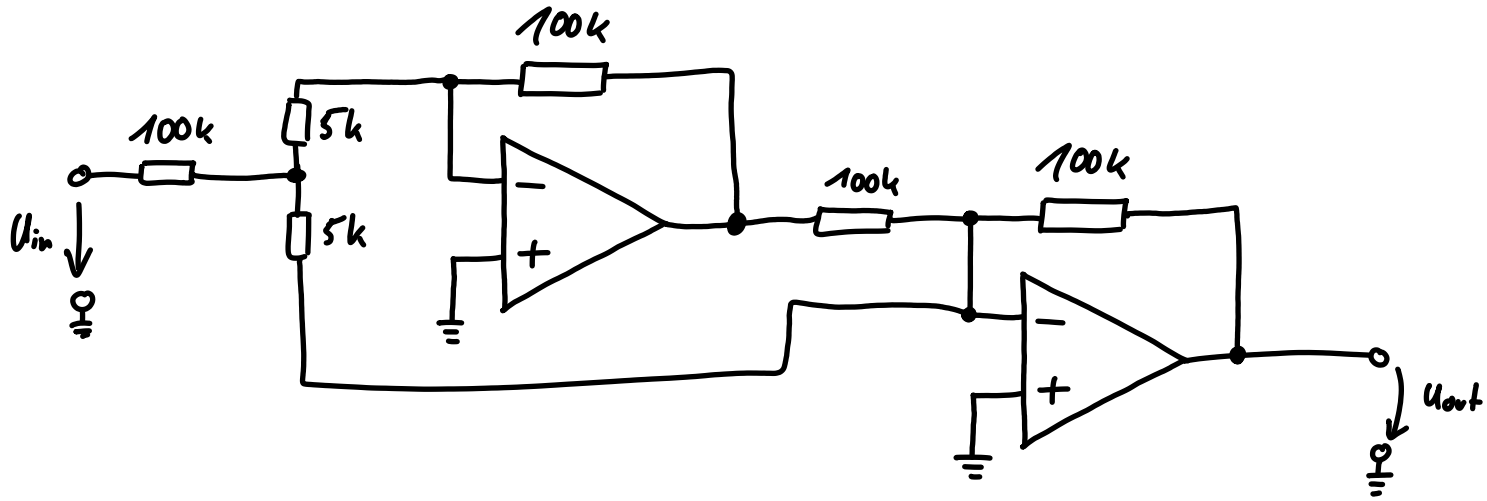
100k
100k
5k
5k
100k
100k
Uin
Uout

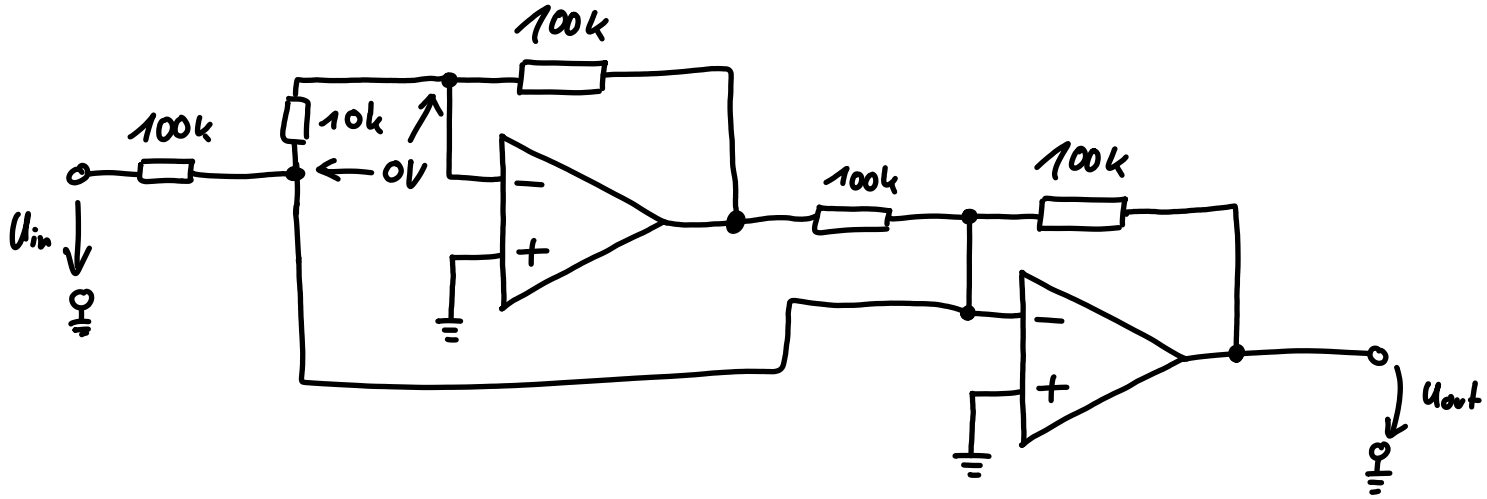
100k
100k
10k
0V
100k
100k
Uin
Uout

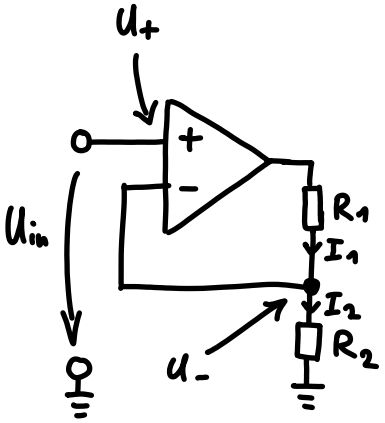
U+
Uin
R1
I1
I2
R2
U-

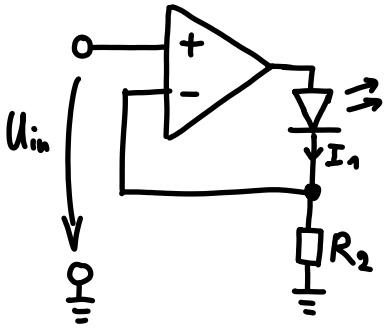
Uin
I1
R2

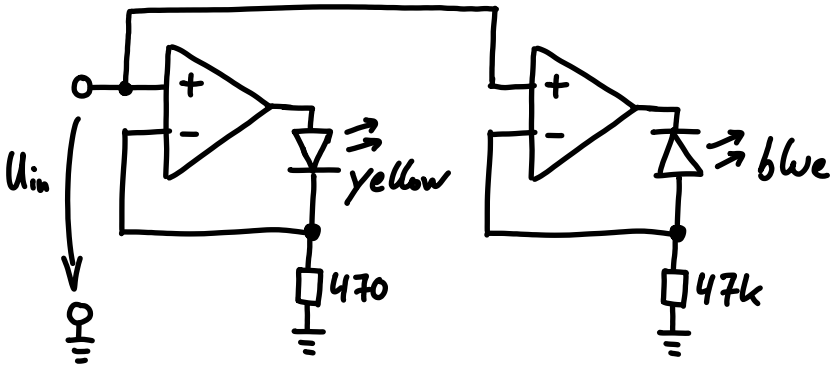
Uin
yellow
470
blue
47k

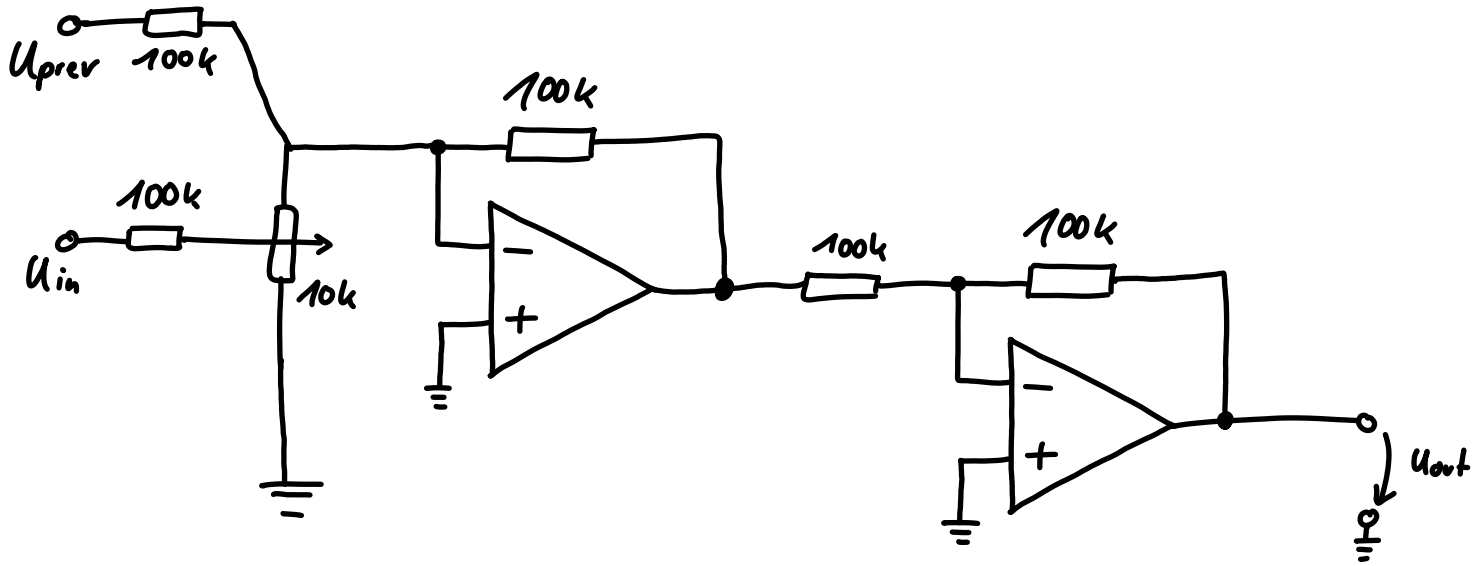
Uprev
100k
100k
Uin
10k
100k
100k
100k
Uout

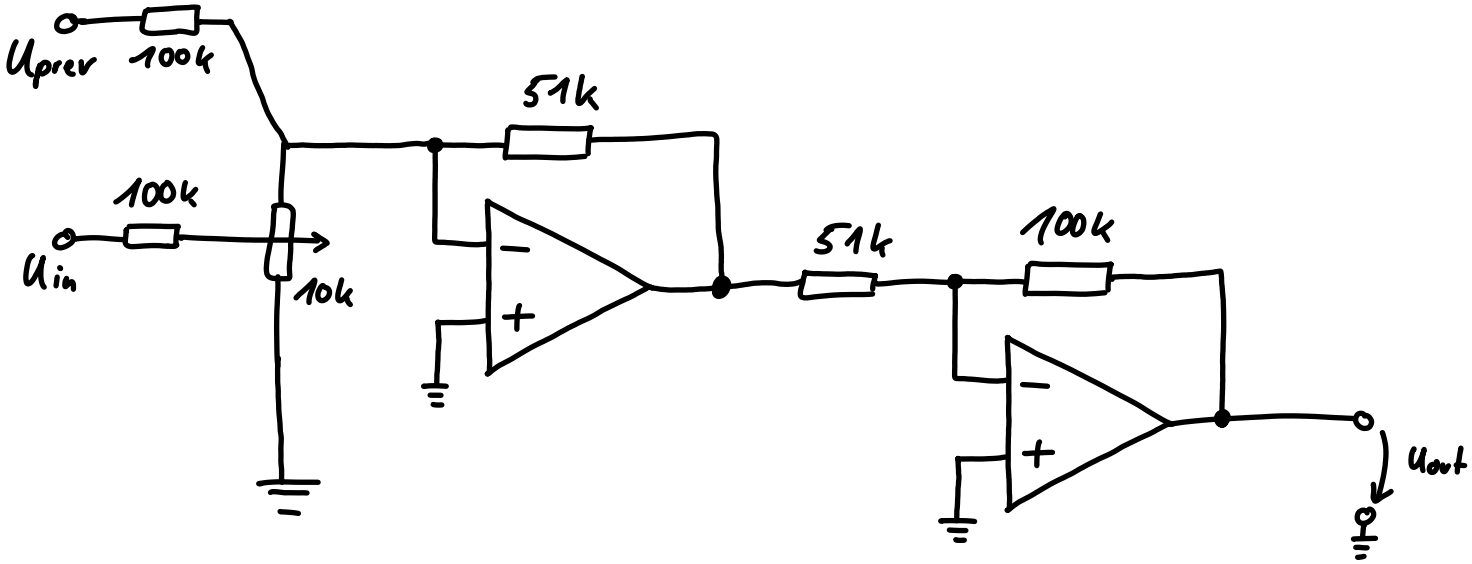
Uprev
100k
51k
100k
Uin
10k
51k
100k
Uout

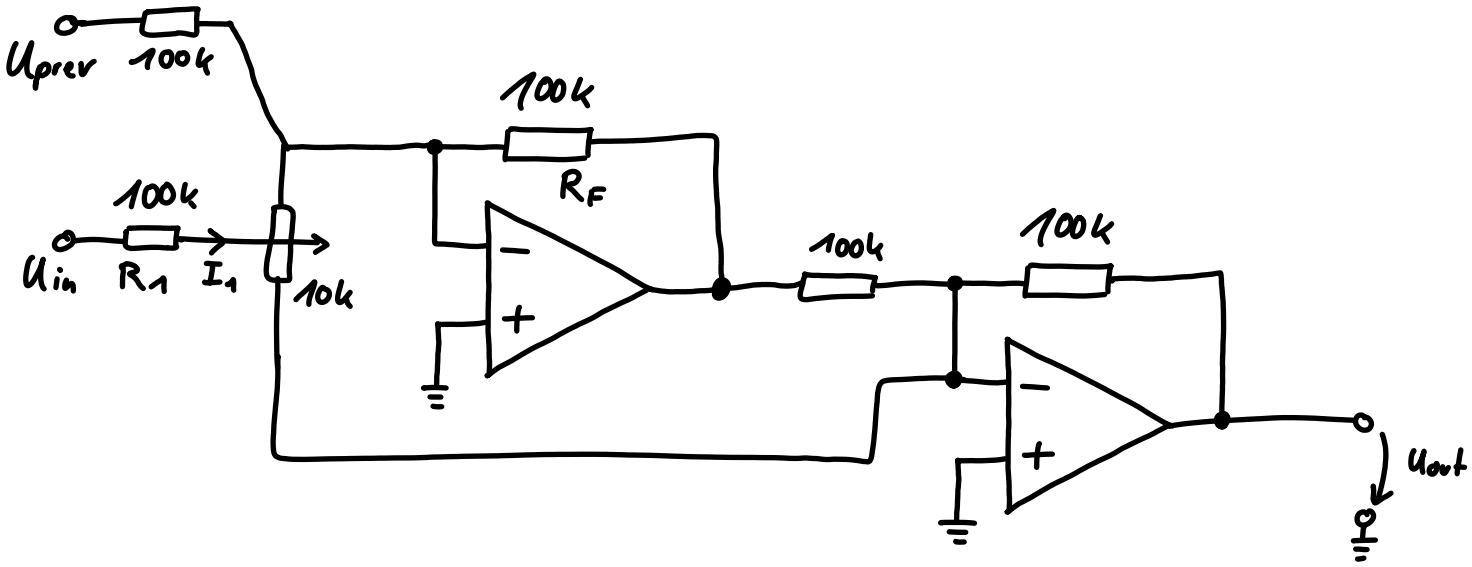
Uprev
100k
100k
RF
100k
Uin
R1
I1
10k
100k
100k
Uout