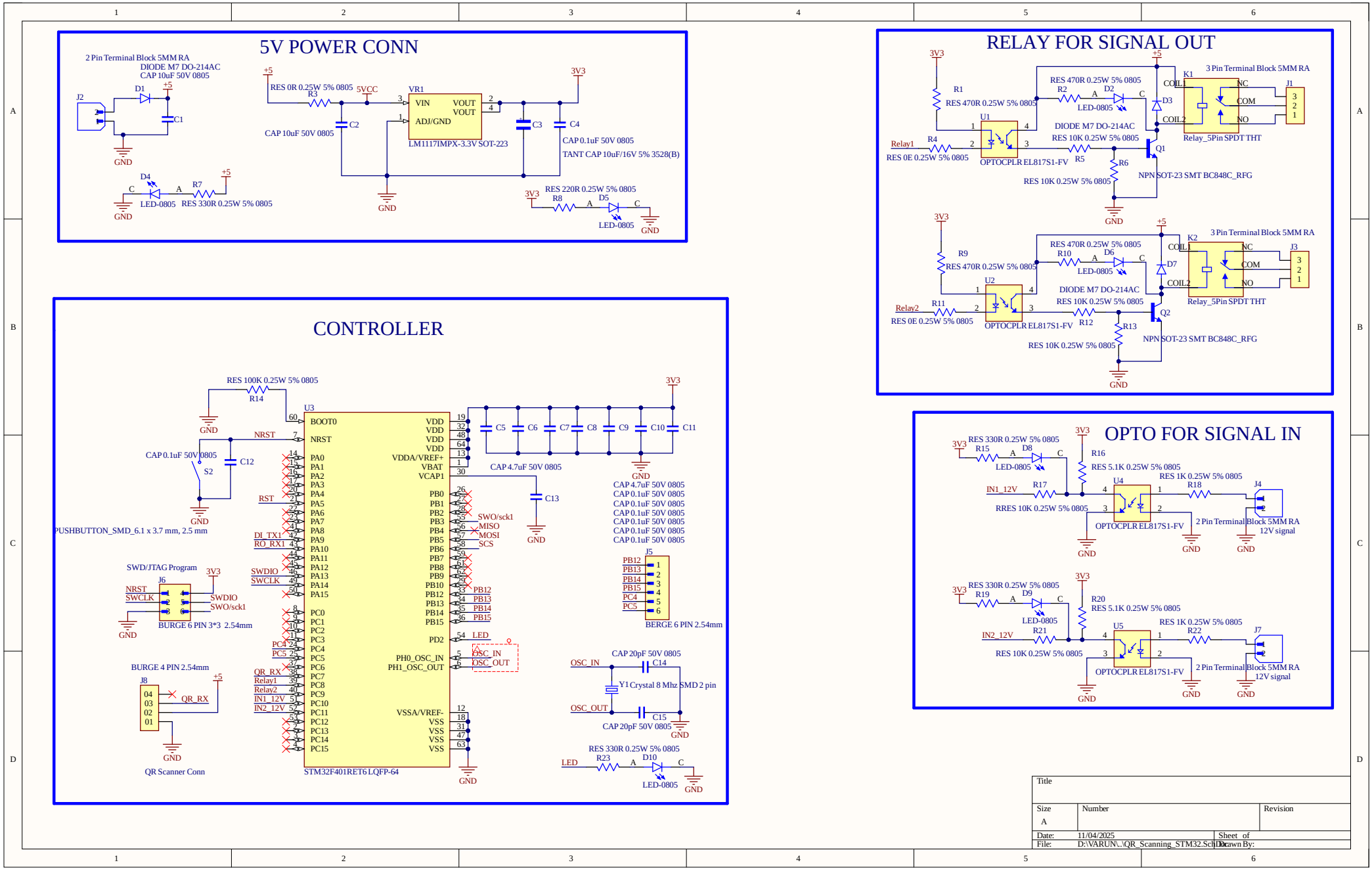
5V POWER CONN
2 Pin Terminal Block 5MM RA
DIODE M7 DO-214AC
CAP 10uF 50V 0805
J2
D1
C1
GND
RES 0R 0.25W 5% 0805
R3
5VCC
VR1
VIN
VOUT
VOUT
ADJ/GND
LM1117IMPX-3.3V SOT-223
CAP 10uF 50V 0805
C2
C3
C4
CAP 0.1uF 50V 0805
TANT CAP 10uF/16V 5% 3528(B)
3V3
+5
D4
LED-0805
R7
RES 330R 0.25W 5% 0805
RES 220R 0.25W 5% 0805
R8
D5
LED-0805
RELAY FOR SIGNAL OUT
3 Pin Terminal Block 5MM RA
K1
J1
COIL1
COIL2
NC
COM
NO
Relay_5Pin SPDT THT
R1
RES 470R 0.25W 5% 0805
R2
D2
D3
U1
OPTOCPLR EL817S1-FV
DIODE M7 DO-214AC
RES 10K 0.25W 5% 0805
Relay1
R4
RES 0E 0.25W 5% 0805
R5
R6
Q1
NPN SOT-23 SMT BC848C_RFG
K2
J3
R9
R10
D6
D7
U2
Relay2
R11
R12
R13
Q2
CONTROLLER
RES 100K 0.25W 5% 0805
R14
U3
BOOT0
NRST
VDD
VDDA/VREF+
VBAT
VCAP1
PA0
PA1
PA2
PA3
PA4
PA5
PA6
PA7
PA8
PA9
PA10
PA11
PA12
PA13
PA14
PA15
PC0
PC1
PC2
PC3
PC4
PC5
PC6
PC7
PC8
PC9
PC10
PC11
PC12
PC13
PC14
PC15
PB0
PB1
PB2
PB3
PB4
PB5
PB6
PB7
PB8
PB9
PB10
PB12
PB13
PB14
PB15
PD2
PH0_OSC_IN
PH1_OSC_OUT
VSSA/VREF-
VSS
STM32F401RET6 LQFP-64
C5
C6
C7
C8
C9
C10
C11
CAP 4.7uF 50V 0805
C13
CAP 0.1uF 50V 0805
C12
S2
PUSHBUTTON_SMD_6.1 x 3.7 mm, 2.5 mm
SWO/sck1
MISO
MOSI
SCS
DI_TX1
RO_RX1
SWDIO
SWCLK
RST
LED
OSC_IN
OSC_OUT
QR_RX
Relay1
Relay2
IN1_12V
IN2_12V
SWD/JTAG Program
J6
BURGE 6 PIN 3*3 2.54mm
BURGE 4 PIN 2.54mm
J8
QR Scanner Conn
J5
BERGE 6 PIN 2.54mm
CAP 20pF 50V 0805
C14
C15
Y1 Crystal 8 Mhz SMD 2 pin
RES 330R 0.25W 5% 0805
R23
D10
LED-0805
OPTO FOR SIGNAL IN
R15
D8
R16
RES 5.1K 0.25W 5% 0805
R17
RRES 10K 0.25W 5% 0805
U4
OPTOCPLR EL817S1-FV
R18
RES 1K 0.25W 5% 0805
J4
2 Pin Terminal Block 5MM RA
12V signal
R19
D9
R20
R21
U5
R22
J7
Title
Size
A
Number
Revision
Date: 11/04/2025
Sheet of
File: D:\VARUN\..\QR_Scanning_STM32.SchDoc
Drawn By:

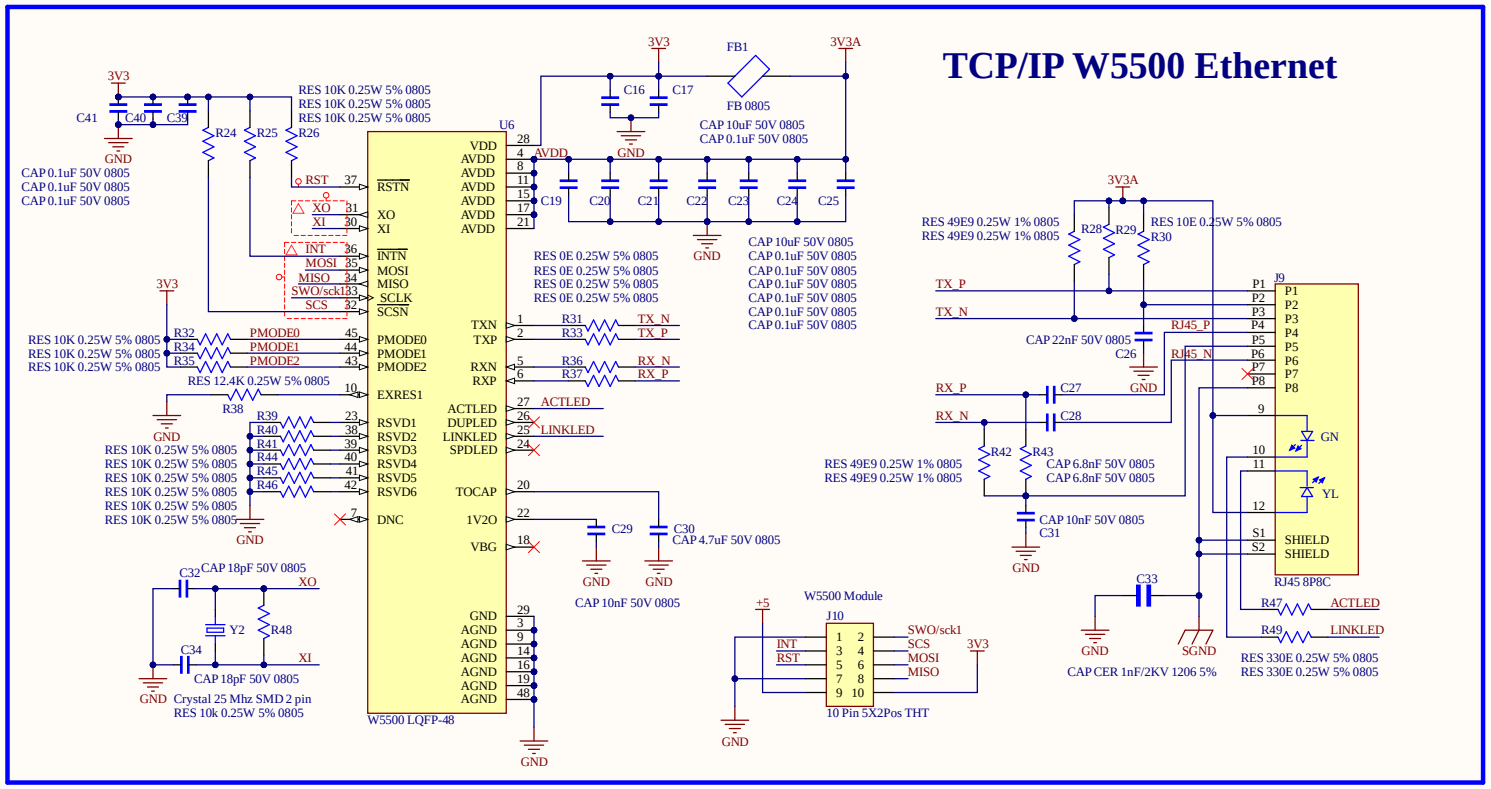

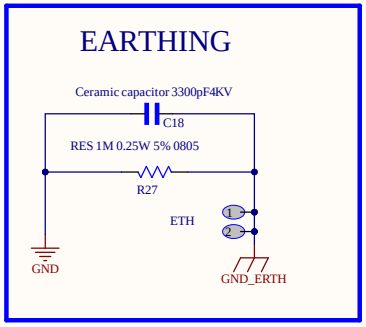

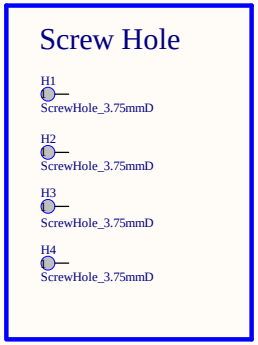

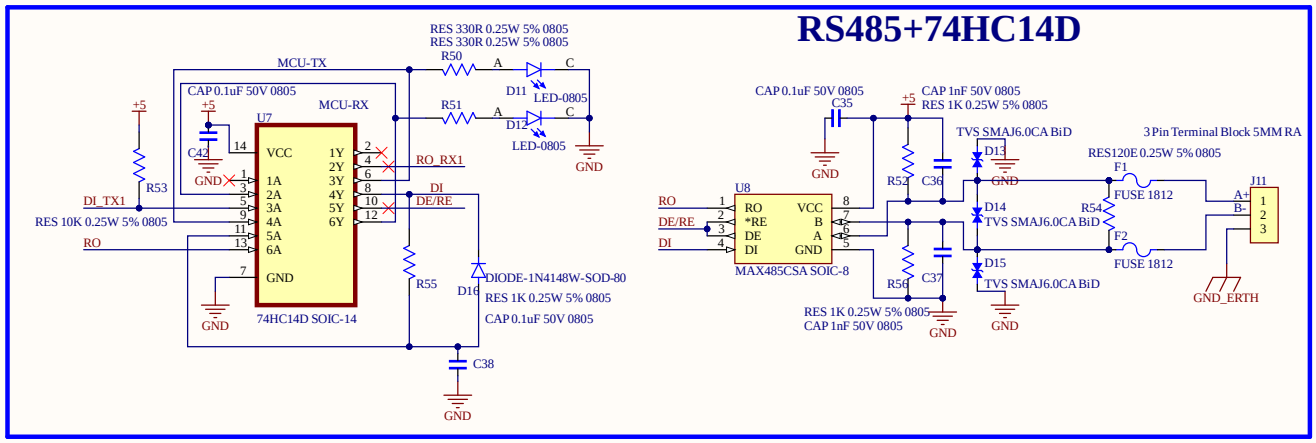

*1
HOUSTON
HOUSTON_LOGO

Title		
Size A	Number	Revision
Date: 11/04/2025		Sheet of
File: D:\VARUN\..\QR_Scanning_STM32F.SchDoc		Drawn By:

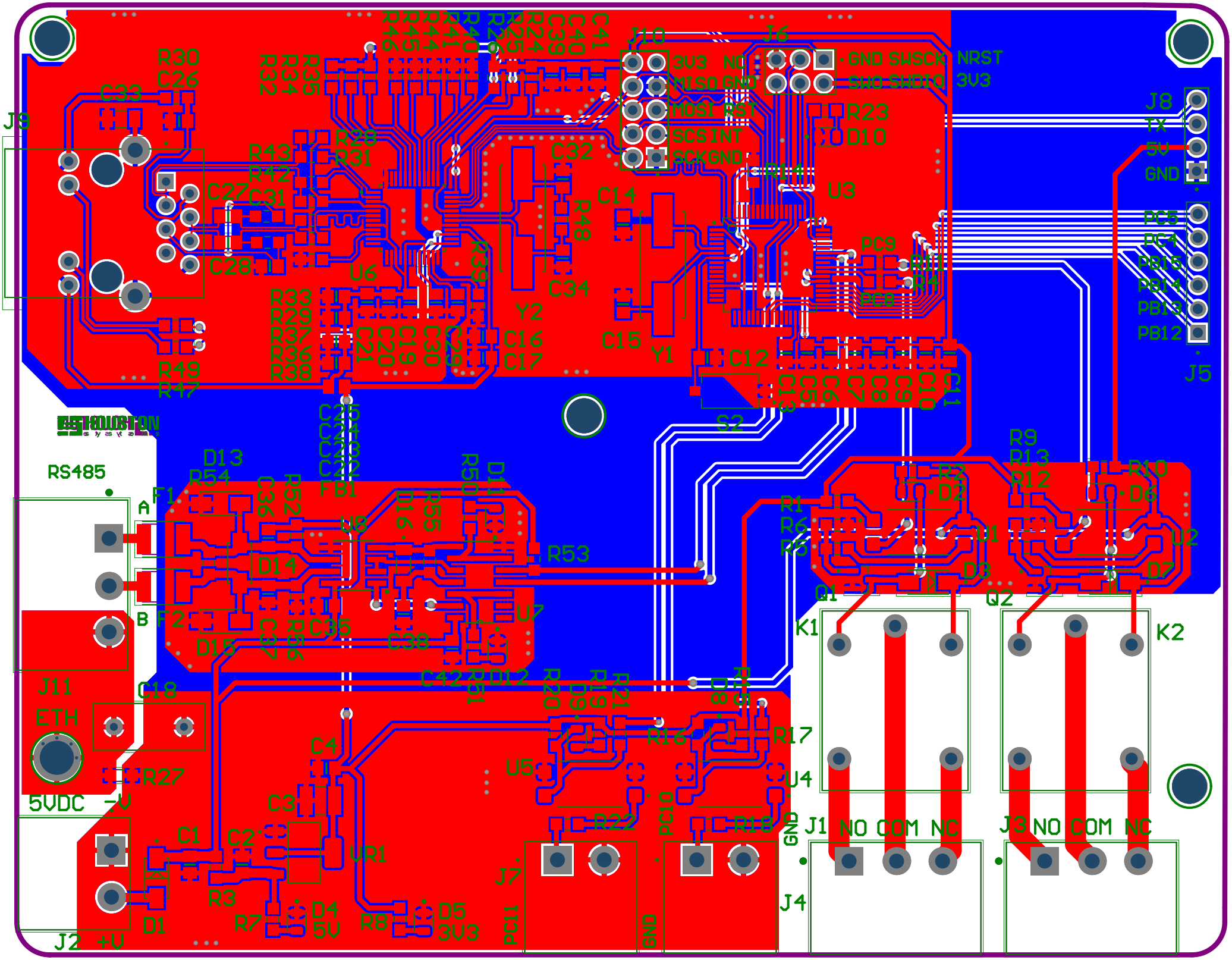
J9
J10
J6
J8
J5
J11
J7
J4
J1
J3
J2
U3
U6
U8
U7
U5
U4
U1
U2
Y1
Y2
S2
K1
K2
Q1
Q2
RS485
ETH
5VDC
-V
+V
3V3
MISO
MOSI
SCS
SCK
GND
RST
INT
SWSCK
SWO
SWDIO
NRST
TX
5V
PC6
PC4
PB15
PB14
PB13
PB12
PC9
PC10
PC11
NO
COM
NC
A
B
F1
F2
FB1
VR1
D1
D2
D3
D4
D5
D6
D7
D10
D12
D13
D14
D15
R23
R14
R11
R4
R9
R13
R10
R3
R1
R6
R5
R53
R17
R16
R22
R18
R7
R8
R27
R30
R26
R32
R34
R35
R28
R31
R43
R42
R33
R29
R37
R36
R38
R49
R47
R48
R54
R52
R50
R55
R39
R40
R41
C33
C26
C27
C31
C28
C32
C34
C14
C15
C16
C17
C12
C11
C10
C9
C8
C7
C6
C5
C25
C24
C23
C22
C21
C20
C19
C30
C36
C35
C38
C42
C18
C4
C3
C1
C2

Comment	Description	Designator	Footprint	LibRef	Quantity
2N3055A_JJ0001		C1	2N3055A_JJ0001	2N3055A_JJ0001	1
CAP 10uF 50V 0805	CAP CER 0.1uF 50V Ceramic Capacitor X7R 0805 (2012 Metric) 0uF	C1, C2, C17, C35	CAP CER 0.1uF 50V 5%	CAP CER 0.1uF 50V 5%	4
TANT CAP 10uF 16V 5% 2924(B)	10.1µF Molded Tantalum Polymer Capacitor 20 V 1411 (3628 Metric), 1230 mOhm ESR	C2	TANT CAP 3528(B)	TANT CAP 10uF 16V 5% 3528(B)	1
CAP 0.1uF 50V 0805	CAP CER 0.1uF 50V Ceramic Capacitor X7R 0805 (2012 Metric) 0uF	C3, C5, C6, C7, C8, C9, C18, C32, C33, C34, C13, C14, C15, C21, C22, C23, C24, C31, C36, C39, C40, C41, C42	CAP CER 0.1uF 50V 5%	CAP CER 0.1uF 50V 5%	25
CAP 4.7uF 50V 0805	CAP CER 0.1uF 50V Ceramic Capacitor X7R 0805 (2012 Metric) 0uF	C11, C12, C30	CAP CER 0.1uF 50V 5%	CAP CER 0.1uF 50V 5%	3
CAP 20pF 50V 0805	CAP CER 0.1uF 50V Ceramic Capacitor X7R 0805 (2012 Metric) 0uF	C14, C15	CAP CER 0.1uF 50V 5%	CAP CER 0.1uF 50V 5%	2
Ceramic capacitor 1000pF-6KV	Ceramic capacitor 1000pF-6KV, Tension resistance 4000vac(r.m.s.), 4KV 1210, DCE2EA102MA3BH02 E	C16	Ceramic capacitor 1000pF-6KV	Ceramic capacitor 1000pF-6KV	1
CAP 22nF 50V 0805	CAP CER 0.1uF 50V Ceramic Capacitor X7R 0805 (2012 Metric) 0uF	C25	CAP CER 0.1uF 50V 5%	CAP CER 0.1uF 50V 5%	1
CAP 0.8nF 50V 0805	CAP CER 0.1uF 50V Ceramic Capacitor X7R 0805 (2012 Metric) 0uF	C27, C28	CAP CER 0.1uF 50V 5%	CAP CER 0.1uF 50V 5%	2
CAP 10nF 50V 0805	CAP CER 0.1uF 50V Ceramic Capacitor X7R 0805 (2012 Metric) 0uF	C29, C31	CAP CER 0.1uF 50V 5%	CAP CER 0.1uF 50V 5%	2
CAP 28pF 50V 0805	CAP CER 0.1uF 50V Ceramic Capacitor X7R 0805 (2012 Metric) 0uF	C33, C34	CAP CER 0.1uF 50V 5%	CAP CER 0.1uF 50V 5%	2
CAP CER 1nF-2KV 1206 5%	1000pF 2kVdc 2000V 2kV Ceramic Capacitor C0G (NP0) 1206 (3216 Metric) C1206C102K2GACAUTO	C33	CAP CER 1nF-2KV 1206 5%	CAP CER 1nF-2KV 1206 5%	1
CAP 1nF 50V 0805	CAP CER 0.1uF 50V Ceramic Capacitor X7R 0805 (2012 Metric) 0uF	C36, C37	CAP CER 0.1uF 50V 5%	CAP CER 0.1uF 50V 5%	2
DIODE M7 DO-214AC	M7 General Purpose SMD Rectifier Diode SMA (DO-214AC) 1A 1000V 1kVRRM 30Amp IFSM	D1, D3, D7	DIODE M7 DO-214AC	DIODE M7 DO-214AC	3
LED-0805	LED 0805 (2012 Metric) Concrete 1.80V 0805 (2012 Metric)	D2, D4, D5, D6, D8, D9, D10, D11, D12	LED-0805	LED-0805	9
TVS 3MAJ5.0CA IND	3MAJ5.0CA MPQ Bidirectional TVS diode Unitefuture DO-214AC (SMA)	D13, D14, D15	TVS 3MAJ5.0CA DO-214AC (SMA)	TVS 3MAJ5.0CA DO-214AC (SMA)	3
DIODE-1N4148WW-GOOD 80	DIODE-1N4148WW-GOOD is a general-purpose silicon diode 1.1V@0.1A 100V	D20	DIODE-1N4148WW-GOOD 80	DIODE-1N4148WW-GOOD 80	1
SMTHREE_VIA SOLE_3.125MM	SMTHREE_VIA SOLE_3.125MM	E3u	SMTHREE_VIA SOLE_3.125MM	SMTHREE_VIA SOLE_3.125MM	1
FUSE 1812	Polyswitch PTC Resettable Fuse 60V 100 mA Hold Surface Mount 1812(4532 Metric), Concave, MF-MSMR010-2	F1, F2	FUSE 1812	FUSE 1812	2
FB 0805	MA0206-1010 Bourns Inc. Ferrite Bead, 100 Ohms @ 100 MHz, Signal Line Ferrite Bead 0805 (2012 Metric) 2A 100mOhm	FB1	FB 0805	FB 0805	1
ScrewHole_3.75mm3	BC3EC4EM3 GRA 0.1MM 0.5EM LEG DIA 3.5MM	H1, H2, H3, H4	ScrewHole_3.75mm3 duplicate	ScrewHole_3.75mm3	4
3-Pin Terminal Block 5MM/5A	3-Pin Terminal Block KG8 Solder Tail 5A 220 V, 5 mm pitch, 300	J1, J3, J11	3-Pin Terminal Block 5MM/5A	3-Pin Terminal Block 5MM/5A	3
3-Pin Terminal Block 5MM/5A	3-Pin Terminal Block KG8 Solder Tail 5A 220 V, 5 mm pitch, 300	J2, J4, J7	3-Pin Terminal Block 5MM/5A	3-Pin Terminal Block 5MM/5A	3
8ERGE 6-PIN 2.54mm	8ergERK, Board to Board connector, Unshrouded Vertical Header, 2.54 mm Pitch, Single Row, 6 Positions, 2.54 mm (0.100in) Pitch, 6MGG-8BH47	J5	8ERGE 6-PIN 2.54mm	8ERGE 6-PIN 2.54mm	3
8URGE 6-PIN 3*3 2.54mm	8URGE 6-PIN 3*3 2.54mm Positions, Pitch	J6	8URGE 6-PIN 3*3 2.54mm	8URGE 6-PIN 3*3 2.54mm	1
8URGE 4-PIN 2.54mm	Conn Unshrouded Header H2R 4 Pos 2.54mm Solder ST Top Entry Thru-Hole Bulk TRW 3M-174-2-I-11	J8	8URGE 4-PIN 2.54mm	8URGE 4-PIN 2.54mm	1
RJ45-8P8C	10/100Base-T, 8P8C, Horizontal, Shielded, LED, Through Hole, 6 Ayer Plating, RJ45 with Integrated Magnetics Modular Connector DG311-NL1-TH	J9	RJ45-8P8C	RJ45-8P8C	1
10 Pin 5X2Pins THT	10 Pin 5X2Pins THT Bergstick 2.54MM MF2W-10S-0.2-D-1	J10	10 Pin 5X2Pins THT	10 Pin 5X2Pins THT	1
Relay_SPst-SPDT THT	Relay General Purpose Non Latching 3VDC SPDT 10A (250VAC) Max SPN-0R0-03VDC-S-C	K1, K2	Relay_SPst-SPDT THT	Relay_SPst-SPDT THT	2
NPN SOT-23 0ATBC8A0_RFG	NPN SMT BC846C_RFG SOT-23, 65V, 0.1A, NPN Transistor	Q1, Q2	NPN SOT-23 0ATBC8A0_RFG	NPN SOT-23 0ATBC8A0_RFG	2
R01-470R 0.25W 5% 0805	RESISTOR, THICK FILM, 10K, 5%, 0805 0.25W 0ATBC	R1, R2, R8, R10	R01-0805 10K 0.25W 5%	R01 10K 0.25W 5% 0805	4
R01-5R 0.25W 5% 0805	RESISTOR, THICK FILM, 10K, 5%, 0805 0.25W 0ATBC	R3	R01-0805 10K 0.25W 5%	R01 10K 0.25W 5% 0805	1
R01-5E 0.25W 5% 0805	RESISTOR, THICK FILM, 10K, 5%, 0805 0.25W 0ATBC	R4, R11, R16, R33, R35, R37	R01-0805 10K 0.25W 5%	R01 10K 0.25W 5% 0805	6
R01 10K 0.25W 5% 0805	RESISTOR, THICK FILM, 10K, 5%, 0805 0.25W 0ATBC	R5, R6, R12, R13, R21, R23, R25, R26, R32, R34, R36, R38, R40, R41, R44, R45, R46, R48, R52	R01-0805 10K 0.25W 5%	R01 10K 0.25W 5% 0805	18
R01 180R 0.25W 5% 0805	RESISTOR, THICK FILM, 10K, 5%, 0805 0.25W 0ATBC	R7, R22, R24, R31, R42, R51	R01-0805 10K 0.25W 5%	R01 10K 0.25W 5% 0805	6
R01 200R 0.25W 5% 0805	RESISTOR, THICK FILM, 10K, 5%, 0805 0.25W 0ATBC	R9	R01-0805 10K 0.25W 5%	R01 10K 0.25W 5% 0805	1
R01 100K 0.25W 5% 0805	RESISTOR, THICK FILM, 10K, 5%, 0805 0.25W 0ATBC	R14	R01-0805 10K 0.25W 5%	R01 10K 0.25W 5% 0805	2
R01 5.1K 0.25W 5% 0805	RESISTOR, THICK FILM, 10K, 5%, 0805 0.25W 0ATBC	R44, R50	R01-0805 10K 0.25W 5%	R01 10K 0.25W 5% 0805	2
R01 10K 0.25W 5% 0805	RESISTOR, THICK FILM, 10K, 5%, 0805 0.25W 0ATBC	R17	R01-0805 10K 0.25W 5%	R01 10K 0.25W 5% 0805	1
R01 1M 0.25W 5% 0805	RESISTOR, THICK FILM, 10K, 5%, 0805 0.25W 0ATBC	R18, R32, R52, R55, R58	R01-0805 10K 0.25W 5%	R01 10K 0.25W 5% 0805	5
R01 680K 0.25W 5% 0805	RESISTOR, THICK FILM, 10K, 5%, 0805 0.25W 0ATBC	R27	R01-0805 10K 0.25W 5%	R01 10K 0.25W 5% 0805	1
R01 100 0.25W 5% 0805	RESISTOR, THICK FILM, 10K, 5%, 0805 0.25W 0ATBC	R28, R29, R62, R63	R01-0805 10K 0.25W 5%	R01 10K 0.25W 5% 0805	4
R01 10 0.25W 5% 0805	RESISTOR, THICK FILM, 10K, 5%, 0805 0.25W 0ATBC	R30	R01-0805 10K 0.25W 5%	R01 10K 0.25W 5% 0805	1
R01 12.4K 0.25W 5% 0805	RESISTOR, THICK FILM, 10K, 5%, 0805 0.25W 0ATBC	R39	R01-0805 10K 0.25W 5%	R01 10K 0.25W 5% 0805	1
R01 200K 0.25W 5% 0805	RESISTOR, THICK FILM, 10K, 5%, 0805 0.25W 0ATBC	R47, R49	R01-0805 10K 0.25W 5%	R01 10K 0.25W 5% 0805	2
R01 0.25E 0.25W 5% 0805	RESISTOR, THICK FILM, 10K, 5%, 0805 0.25W 0ATBC	R54	R01-0805 10K 0.25W 5%	R01 10K 0.25W 5% 0805	1
PUSHBUTTON_SMD_6P	6.1 x 3.7 mm, 2.5 mm Actuator Height, 260 gf, Red, Surface Mount, SPST, Tactile Switch, TAM-63-JE-R	S2	PUSHBUTTON_SMD_6P	PUSHBUTTON_SMD_6P	1
OPTOCPLER-EL817S1-FV	Optoisolator 5kVrms 1Ch 20mA Transistor Output 4-Pin SMD EL817S1-FV	S3, S5, S4, S6	OPTOCPLER-EL817S1-FV	Optocr-EL817S1-FV	4
STM32F401RET6 LQFP-64	ARM® Cortex®-M4 STM32F4 Microcontroller IC 32-Bit Single-Core 84MHz 512KB (512K x 8) FLASH 64-LQFP 10x10x1	U1	STM32F401RE Contrib lib	STM32F401RET6	1
W5500 LQFP-48	W5500 LQFP-48 Hardwired TCP/IP Embedded Ethernet controller	U8	W5500 LQFP-48	W5500	1
TIHC14D SOIC-14	Texas Instruments 4-Channel Schmitt Trigger 14-SO(SOIC)-14	U7	TIHC14D SOIC-14	TIHC14D.602	1
MAX485CSA SOIC-8	MAX485CSA+ 485/RS-422 Transceivers, SOIC-8	U9	MAX485CSA	MAX485CSA	1
LM1117MPX-3.3V SOT-223	LM1117MPX-3.3V 800 mA 15 V linear voltage regulator SOT-223	U5, U3	LM1117MPX-3.3V SOT-223	LM1117MPX-3.3V SOT-223	2
Crystal 8 Mhz SMD 2 pin	16 Mhz 8x16ppm Crystal 20pF 60 Ohms HC-49/US FOXSDLF-LBr-20 16 Mhz Crystal SMD -C3B8-4A(3C8)(HU) 12.5mm x 4.65mm(max)	Y1	Crystal 16 Mhz SMD 2 pin	Crystal 16 Mhz SMD 2 pin_1	1
Crystal 25 Mhz SMD 2 pin	16 MHz 8x16ppm Crystal 20pF 60 Ohms HC-49/US FOXSDLF-LBr-20 16 Mhz Crystal SMD -C3B8-4A(3C8)(HU) 12.5mm x 4.65mm(max)	Y2	Crystal 16 Mhz SMD 2 pin	Crystal 16 Mhz SMD 2 pin_1	1