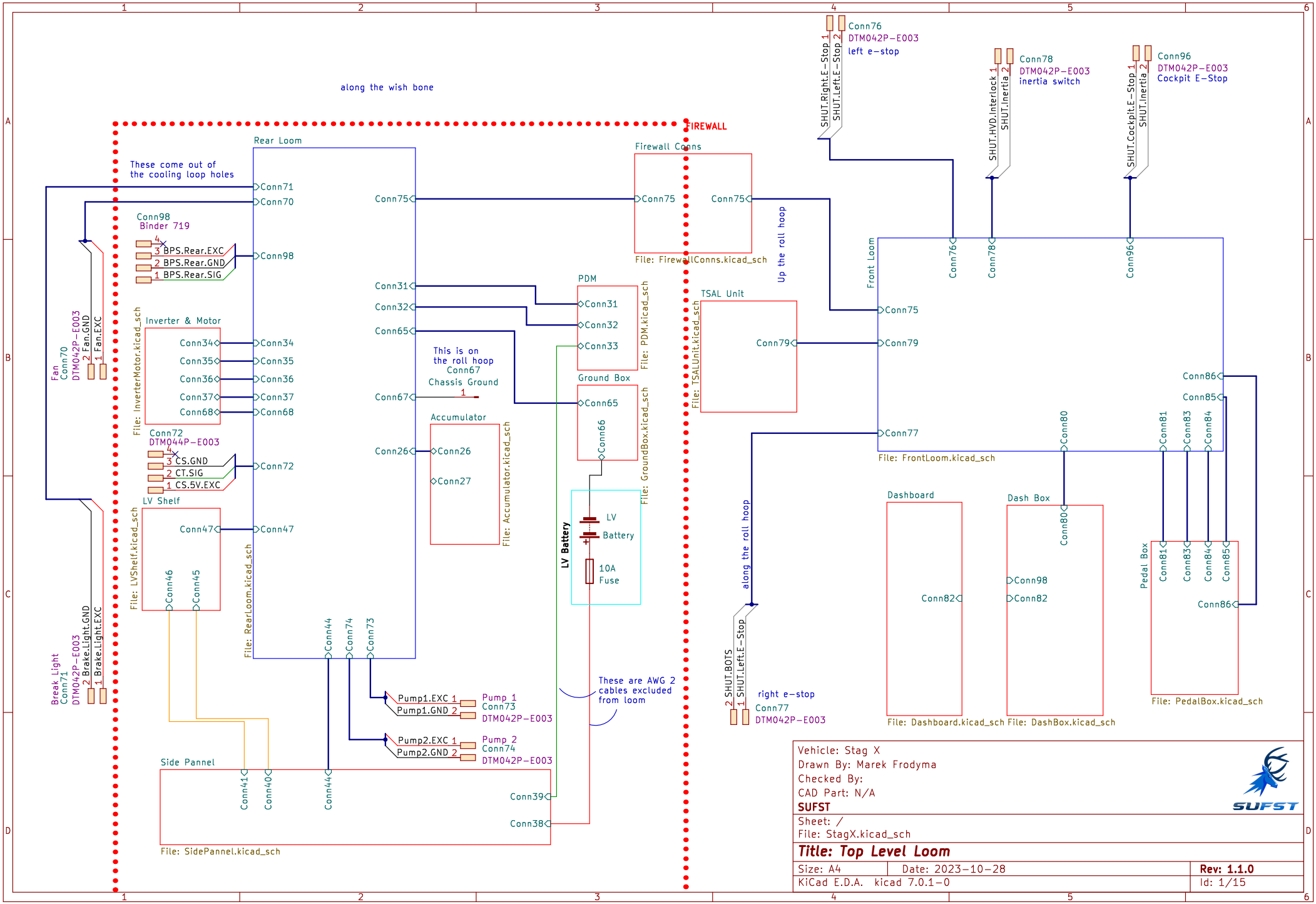
along the wish bone
FIREWALL
Rear Loom
These come out of
the cooling loop holes
Conn71
Conn70
Conn98
Binder 719
4
3 BPS.Rear.EXC
2 BPS.Rear.GND
1 BPS.Rear.SIG
Fan
Conn70
DTM042P-E003
2 Fan.GND
1 Fan.EXC
Inverter & Motor
Conn34
Conn35
Conn36
Conn37
Conn68
File: InverterMotor.kicad_sch
Conn72
DTM044P-E003
4
3 CS.GND
2 CT.SIG
1 CS.5V.EXC
LV Shelf
Conn47
Conn46
Conn45
File: LVShelf.kicad_sch
File: RearLoom.kicad_sch
Break Light
Conn71
DTM042P-E003
2 Brake.Light.GND
1 Brake.Light.EXC
Conn75
Conn31
Conn32
Conn65
Conn67
Conn26
Conn44
Conn74
Conn73
This is on
the roll hoop
Conn67
Chassis Ground
1
Accumulator
Conn26
Conn27
File: Accumulator.kicad_sch
Pump1.EXC 1
Pump1.GND 2
Pump 1
Conn73
DTM042P-E003
Pump2.EXC 1
Pump2.GND 2
Pump 2
Conn74
DTM042P-E003
Side Pannel
Conn41
Conn40
Conn44
Conn39
Conn38
File: SidePannel.kicad_sch
Firewall Conns
Conn75
Conn75
File: FirewallConns.kicad_sch
PDM
Conn31
Conn32
Conn33
File: PDM.kicad_sch
Ground Box
Conn65
Conn66
File: GroundBox.kicad_sch
LV Battery
LV
Battery
10A
Fuse
These are AWG 2
cables excluded
from loom
TSAL Unit
Conn79
File: TSALUnit.kicad_sch
Up the roll hoop
along the roll hoop
2 SHUT.BOTS
1 SHUT.Left.E-Stop
right e-stop
Conn77
DTM042P-E003
SHUT.Right.E-Stop 1
SHUT.Left.E-Stop 2
Conn76
DTM042P-E003
left e-stop
SHUT.HVD.Interlock 1
SHUT.Inertia 2
Conn78
DTM042P-E003
inertia switch
SHUT.Cockpit.E-Stop 1
SHUT.Inertia 2
Conn96
DTM042P-E003
Cockpit E-Stop
Front Loom
Conn76
Conn78
Conn96
Conn75
Conn79
Conn77
Conn86
Conn85
Conn80
Conn81
Conn83
Conn84
File: FrontLoom.kicad_sch
Dashboard
Conn82
File: Dashboard.kicad_sch
Dash Box
Conn80
Conn98
Conn82
File: DashBox.kicad_sch
Pedal Box
Conn81
Conn83
Conn84
Conn85
Conn86
File: PedalBox.kicad_sch
Vehicle: Stag X
Drawn By: Marek Frodyma
Checked By:
CAD Part: N/A
SUFST
Sheet: /
File: StagX.kicad_sch
Title: Top Level Loom
Size: A4
Date: 2023-10-28
Rev: 1.1.0
KiCad E.D.A. kicad 7.0.1-0
Id: 1/15

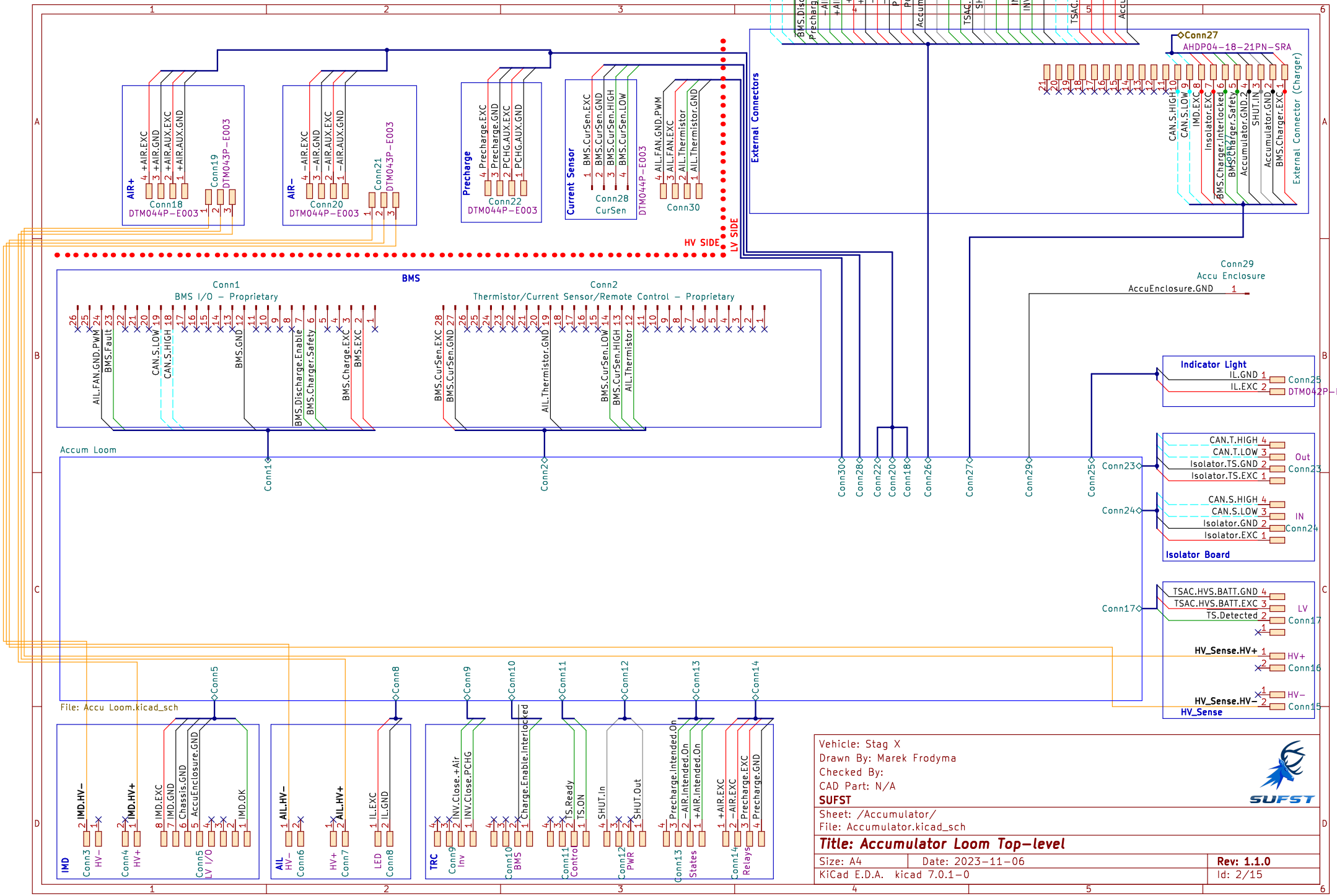

Vehicle: Stag X
Drawn By: Marek Frodyma
Checked By:
CAD Part: N/A
SUFST

Sheet: /Accumulator/
File: Accumulator.kicad_sch

Title: Accumulator Loom Top-level

Size: A4	Date: 2023-11-06	Rev: 1.1.0
KiCad E.D.A. kicad 7.0.1-0		Id: 2/15

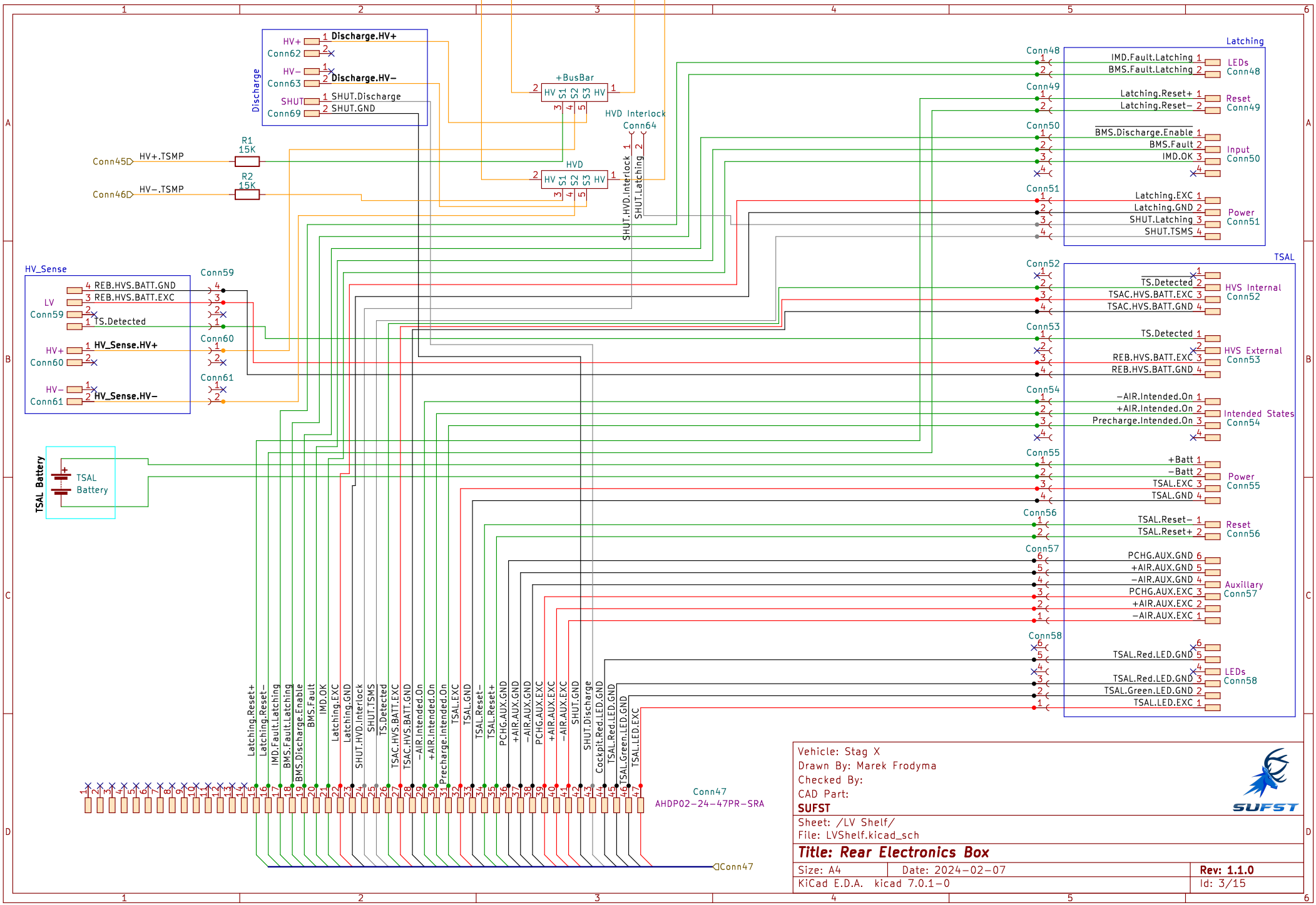
Discharge
HV+ Conn62 1 Discharge.HV+
HV− Conn63 1 Discharge.HV−
SHUT Conn69 1 SHUT.Discharge
2 SHUT.GND
+BusBar
HV S1 S2 S3 HV
HVD Interlock Conn64
SHUT.HVD.Interlock 1
SHUT.Latching 2
HVD
Conn45 HV+.TSMP R1 15K
Conn46 HV−.TSMP R2 15K
HV_Sense
REB.HVS.BATT.GND
REB.HVS.BATT.EXC
LV Conn59
TS.Detected
HV+ Conn60 1 HV_Sense.HV+
HV− Conn61 2 HV_Sense.HV−
Conn59
Conn60
Conn61
TSAL Battery
TSAL Battery
Latching
Conn48
IMD.Fault.Latching 1
BMS.Fault.Latching 2
LEDs Conn48
Conn49
Latching.Reset+ 1
Latching.Reset− 2
Reset Conn49
Conn50
BMS.Discharge.Enable 1
BMS.Fault 2
IMD.OK 3
Input Conn50
Conn51
Latching.EXC 1
Latching.GND 2
SHUT.Latching 3
SHUT.TSMS 4
Power Conn51
TSAL
Conn52
TS.Detected 2
TSAC.HVS.BATT.EXC 3
TSAC.HVS.BATT.GND 4
HVS Internal Conn52
Conn53
TS.Detected 1
REB.HVS.BATT.EXC 3
REB.HVS.BATT.GND 4
HVS External Conn53
Conn54
−AIR.Intended.On 1
+AIR.Intended.On 2
Precharge.Intended.On 3
Intended States Conn54
Conn55
+Batt 1
−Batt 2
TSAL.EXC 3
TSAL.GND 4
Power Conn55
Conn56
TSAL.Reset− 1
TSAL.Reset+ 2
Reset Conn56
Conn57
PCHG.AUX.GND 6
+AIR.AUX.GND 5
−AIR.AUX.GND 4
PCHG.AUX.EXC 3
+AIR.AUX.EXC 2
−AIR.AUX.EXC 1
Auxillary Conn57
Conn58
TSAL.Red.LED.GND 5
TSAL.Red.LED.GND 3
TSAL.Green.LED.GND 2
TSAL.LED.EXC 1
LEDs Conn58
Latching.Reset+
Latching.Reset−
IMD.Fault.Latching
BMS.Fault.Latching
BMS.Discharge.Enable
BMS.Fault
IMD.OK
Latching.EXC
Latching.GND
SHUT.HVD.Interlock
SHUT.TSMS
TS.Detected
TSAC.HVS.BATT.EXC
TSAC.HVS.BATT.GND
−AIR.Intended.On
+AIR.Intended.On
Precharge.Intended.On
TSAL.EXC
TSAL.GND
TSAL.Reset−
TSAL.Reset+
PCHG.AUX.GND
+AIR.AUX.GND
−AIR.AUX.GND
PCHG.AUX.EXC
+AIR.AUX.EXC
−AIR.AUX.EXC
SHUT.GND
SHUT.Discharge
Cockpit.Red.LED.GND
TSAL.Red.LED.GND
TSAL.Green.LED.GND
TSAL.LED.EXC
Conn47
AHDP02−24−47PR−SRA
Conn47
Vehicle: Stag X
Drawn By: Marek Frodyma
Checked By:
CAD Part:
SUFST
Sheet: /LV Shelf/
File: LVShelf.kicad_sch
Title: Rear Electronics Box
Size: A4
Date: 2024−02−07
Rev: 1.1.0
KiCad E.D.A. kicad 7.0.1−0
Id: 3/15

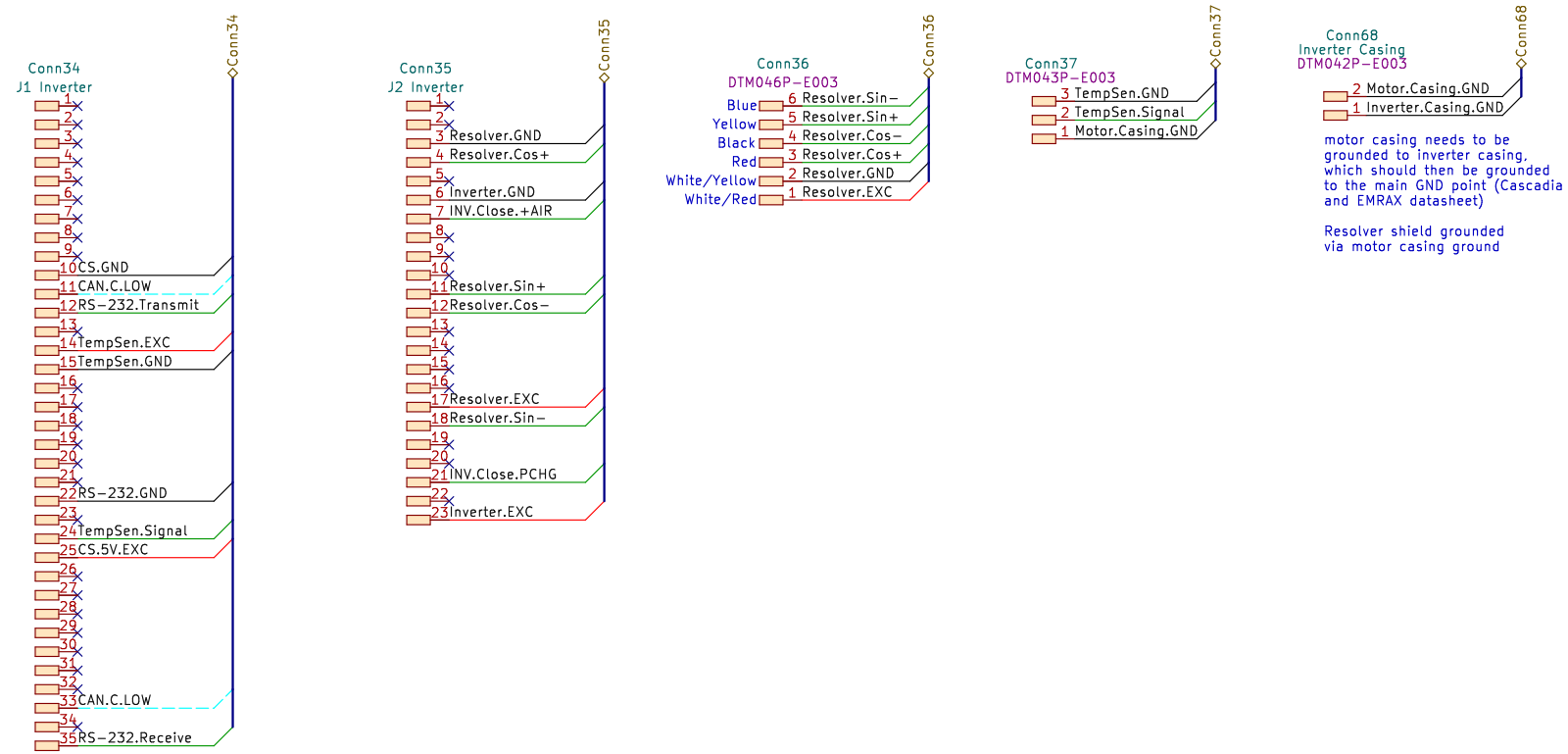

Vehicle: Stag X
Drawn By: Marek Frodyma
Checked By:
CAD Part: N/A
SUFST

Sheet: /Inverter & Motor/
File: InverterMotor.kicad_sch

Title: Inverter, Motor and Resolver

Size: A4	Date: 2024-02-08	**Rev: 1.0.0**
KiCad E.D.A. kicad 7.0.1-0		Id: 4/15

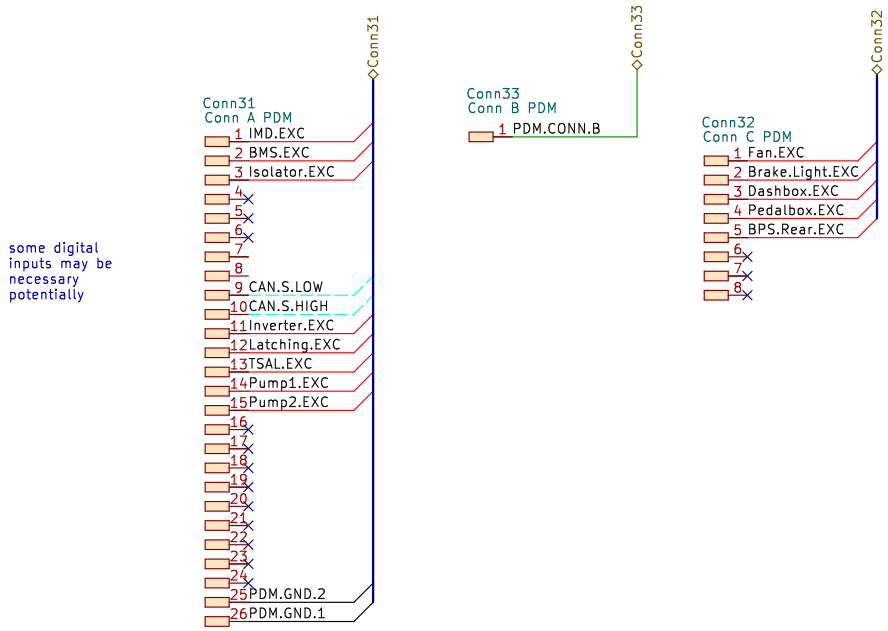

Vehicle: Stag X
Drawn By: Marek Frodyma
Checked By:
CAD Part:
SUFST

Sheet: /PDM/
File: PDM.kicad_sch

Title: PDM

Size: A4	Date: 2024-02-12	**Rev: 1.1.0**
KiCad E.D.A. kicad 7.0.1-0		Id: 5/15

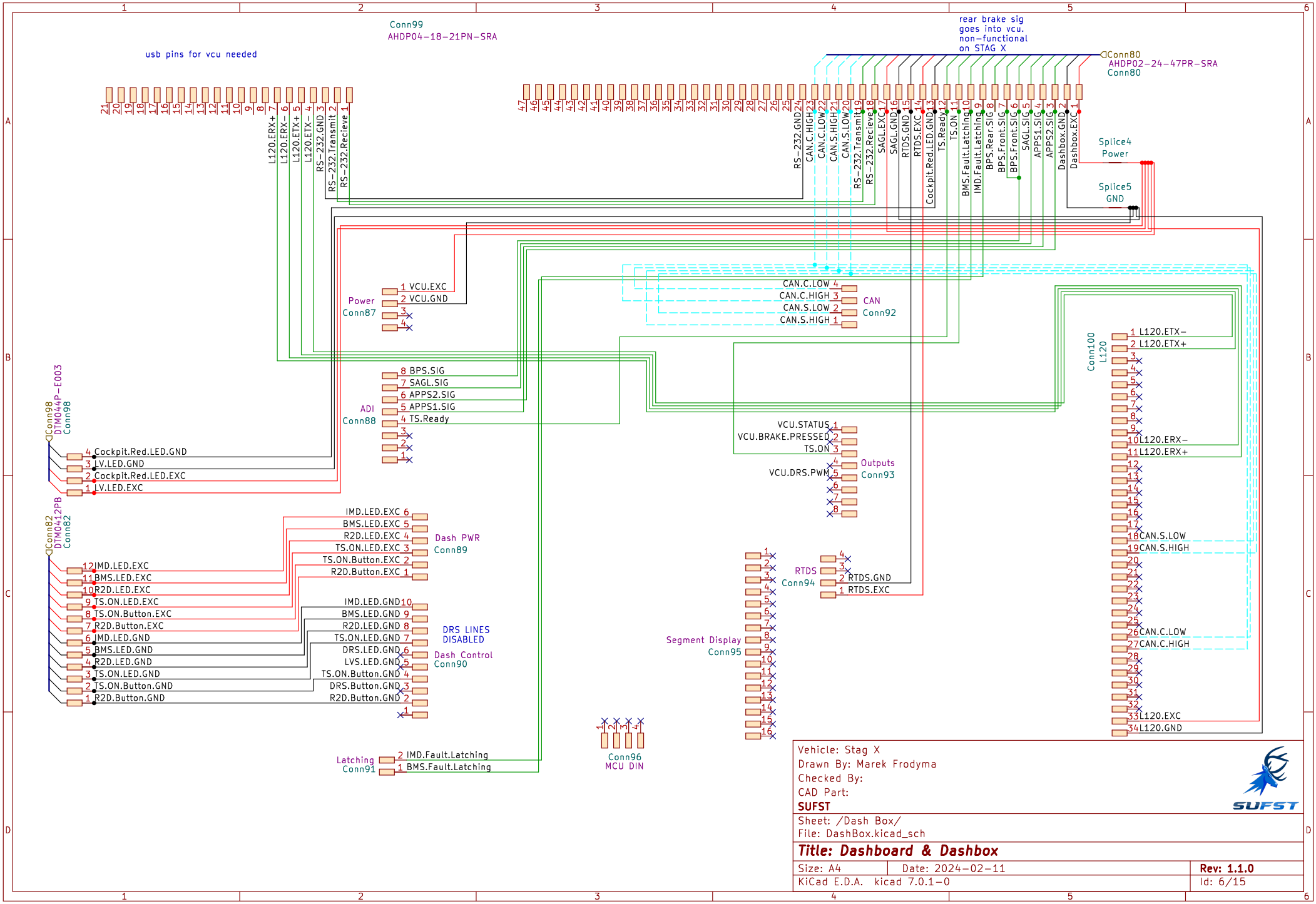

Vehicle: Stag X
Drawn By: Marek Frodyma
Checked By:
CAD Part:
SUFST

Sheet: /Dash Box/
File: DashBox.kicad_sch

Title: Dashboard & Dashbox

Size: A4	Date: 2024-02-11	**Rev: 1.1.0**
KiCad E.D.A. kicad 7.0.1-0		Id: 6/15

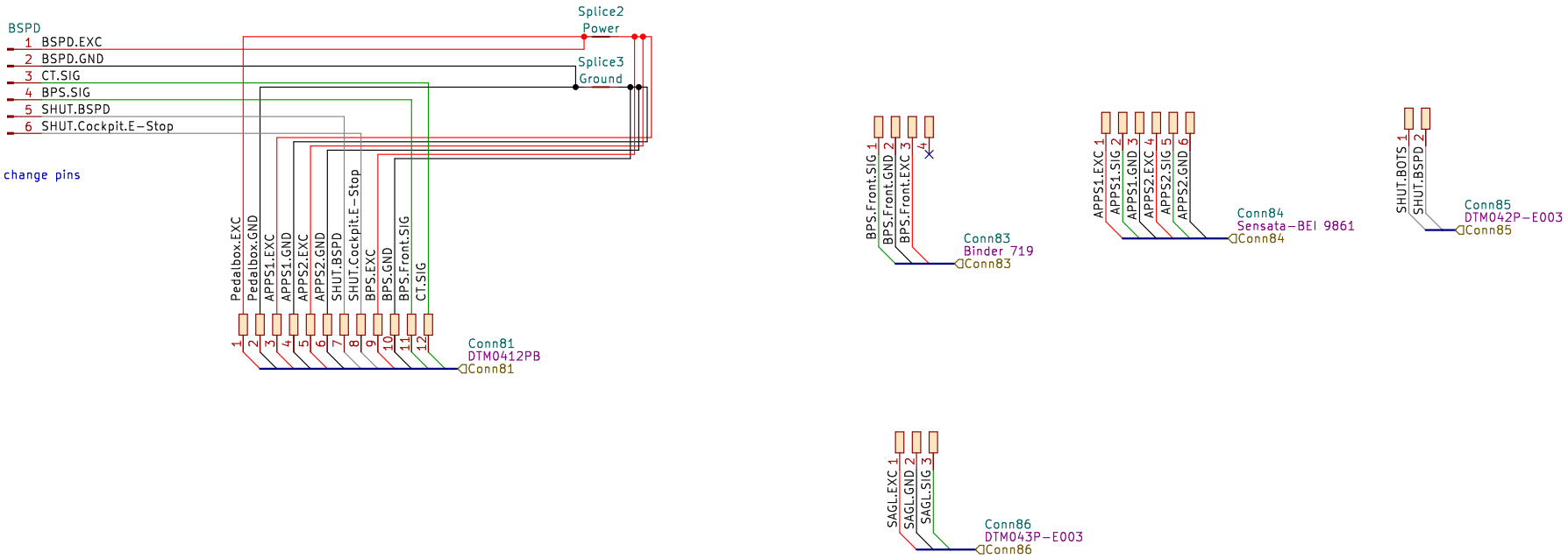

Vehicle: Stag X
Drawn By: Marek Frodyma
Checked By:
CAD Part:
SUFST

Sheet: /Pedal Box/
File: PedalBox.kicad_sch

Title: Pedal Box, APPS & BPS

Size: A4	Date: 2024-02-11	**Rev: 1.1.0**
KiCad E.D.A. kicad 7.0.1-0		Id: 7/15

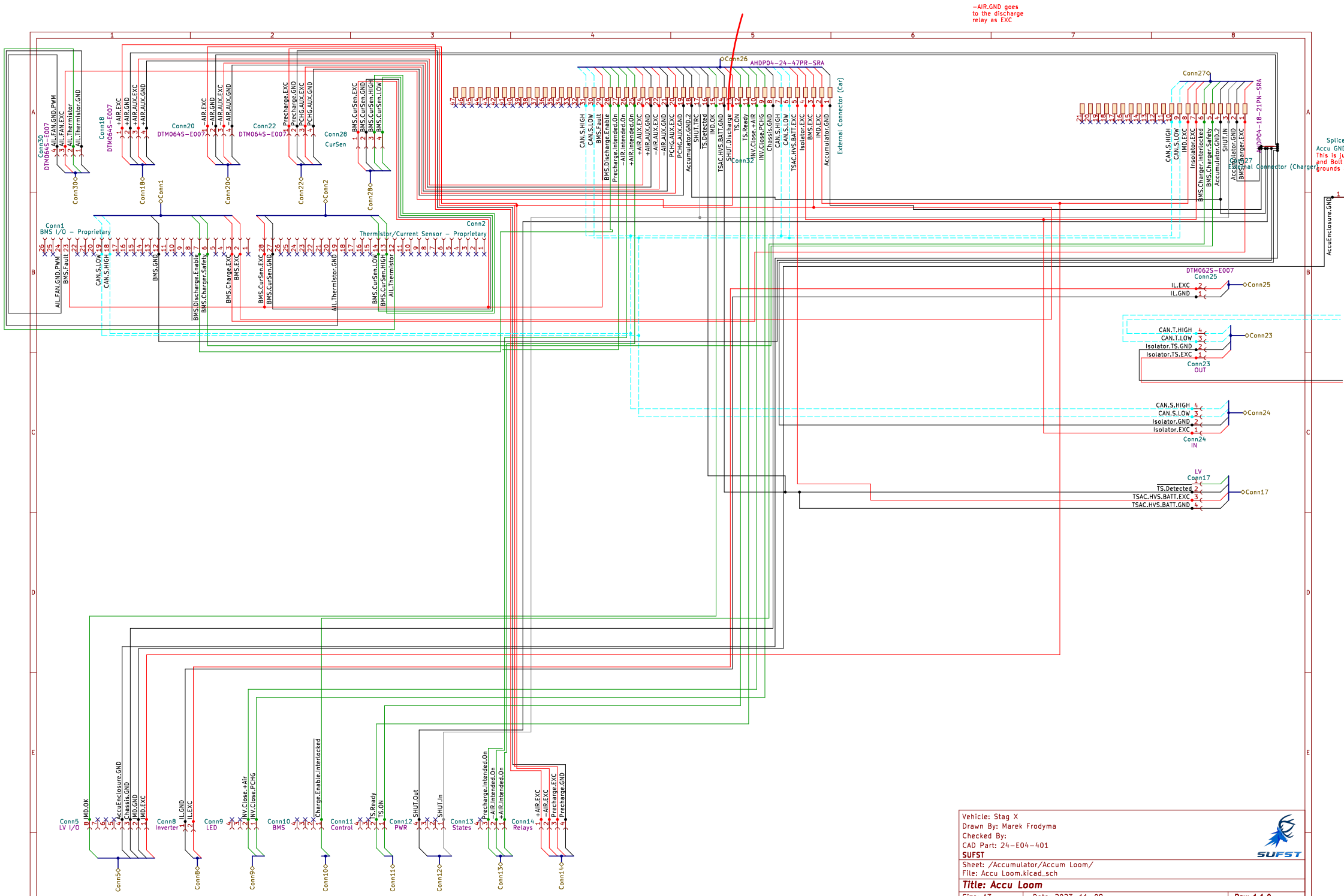
-AIR.GND goes to the discharge relay as EXC
Conn26
AHDP04-24-47PR-SRA
External Connector (Car)
Conn27
AHDP04-18-21PN-SRA
External Connector (Charger)
Splice Accu GND This is just and Bolt grounds
AccuEnclosure.GND
Conn30
DTM0645-E007
Conn18
Conn20
Conn22
Conn28
CurSen
Conn1
BMS I/O - Proprietary
Conn2
Thermistor/Current Sensor - Proprietary
Conn32
Conn25
IL.EXC
IL.GND
Conn23
CAN.T.HIGH
CAN.T.LOW
Isolator.TS.GND
Isolator.TS.EXC
Conn23 OUT
Conn24
CAN.S.HIGH
CAN.S.LOW
Isolator.GND
Isolator.EXC
Conn24 IN
LV Conn17
TS.Detected
TSAC.HVS.BATT.EXC
TSAC.HVS.BATT.GND
Conn17
Conn5 LV I/O
Conn8 Inverter
Conn9 LED
Conn10 BMS
Conn11 Control
Conn12 PWR
Conn13 States
Conn14 Relays
Vehicle: Stag X
Drawn By: Marek Frodyma
Checked By:
CAD Part: 24-E04-401
SUFST
Sheet: /Accumulator/Accum Loom/
File: Accu Loom.kicad_sch
Title: Accu Loom
Size: A3
Date: 2023-11-08
Rev: 1.1.0
KiCad E.D.A. kicad 7.0.1-0
Id: 8/15

Pin connector removal needs to be thought about

note:
the connectors here are just a repetition from the front and rear looms

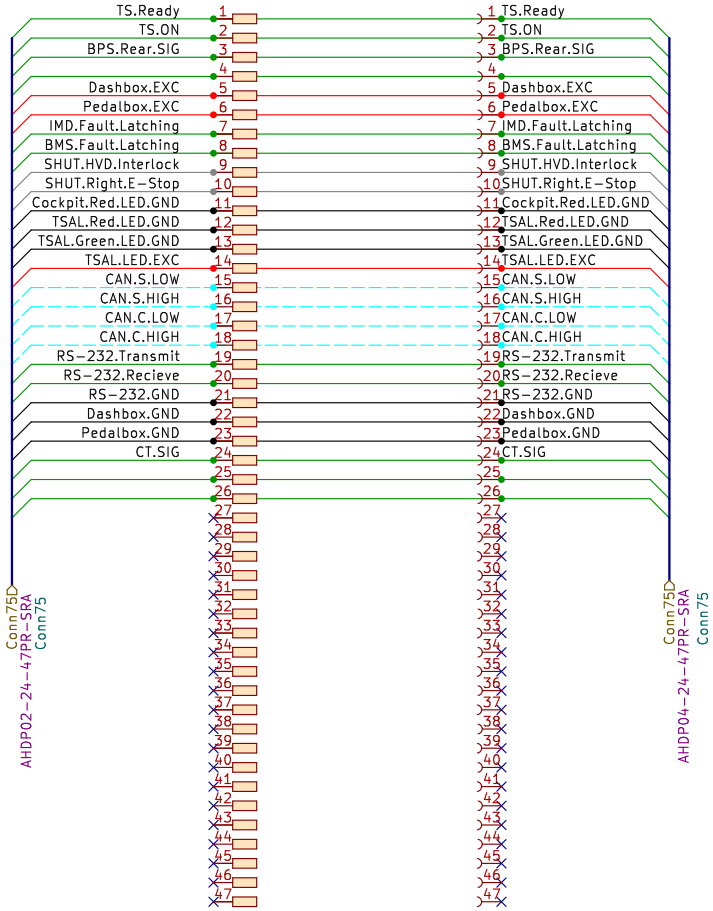

Vehicle: Stag X Drawn By: Marek Frodyma Checked By: CAD Part: **SUFST**		
Sheet: /Firewall Conns/ File: FirewallConns.kicad_sch		
Title: Firewall		
Size: A4	Date: 2024-02-11	**Rev: 1.1.0**
KiCad E.D.A. kicad 7.0.1-0		Id: 9/15

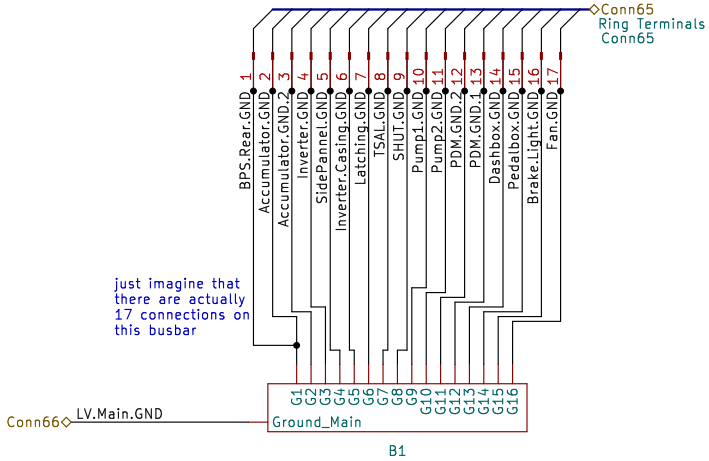

Vehicle: Stag X
Drawn By: Marek Frodyma
Checked By:
CAD Part:
SUFST

Sheet: /Ground Box/
File: GroundBox.kicad_sch

Title: Grounding Box

Size: A4	Date: 2024-02-12	**Rev: 1.1.0**
KiCad E.D.A. kicad 7.0.1-0		Id: 10/15

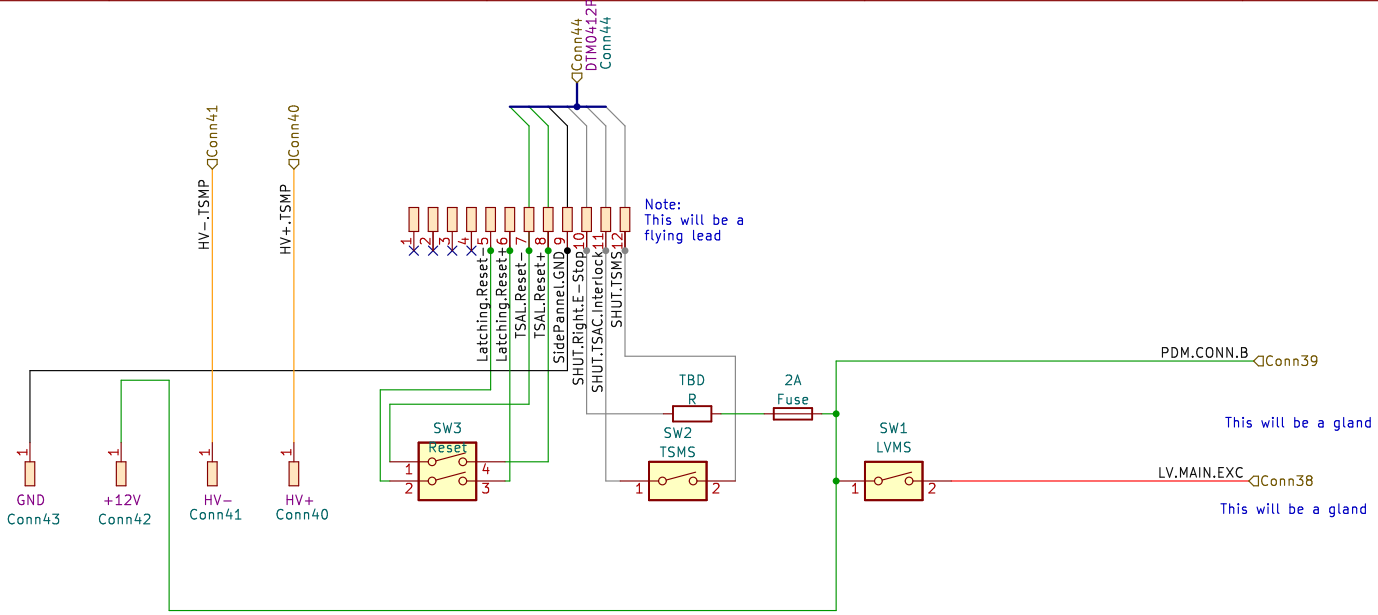

Vehicle: Stag X
Drawn By: Marek Frodyma
Checked By:
CAD Part:
SUFST

Sheet: /Side Pannel/
File: SidePannel.kicad_sch

Title: Side Pannel Loom

Size: A4	Date: 2024-02-07	**Rev: 1.1.0**
KiCad E.D.A. kicad 7.0.1-0		Id: 11/15

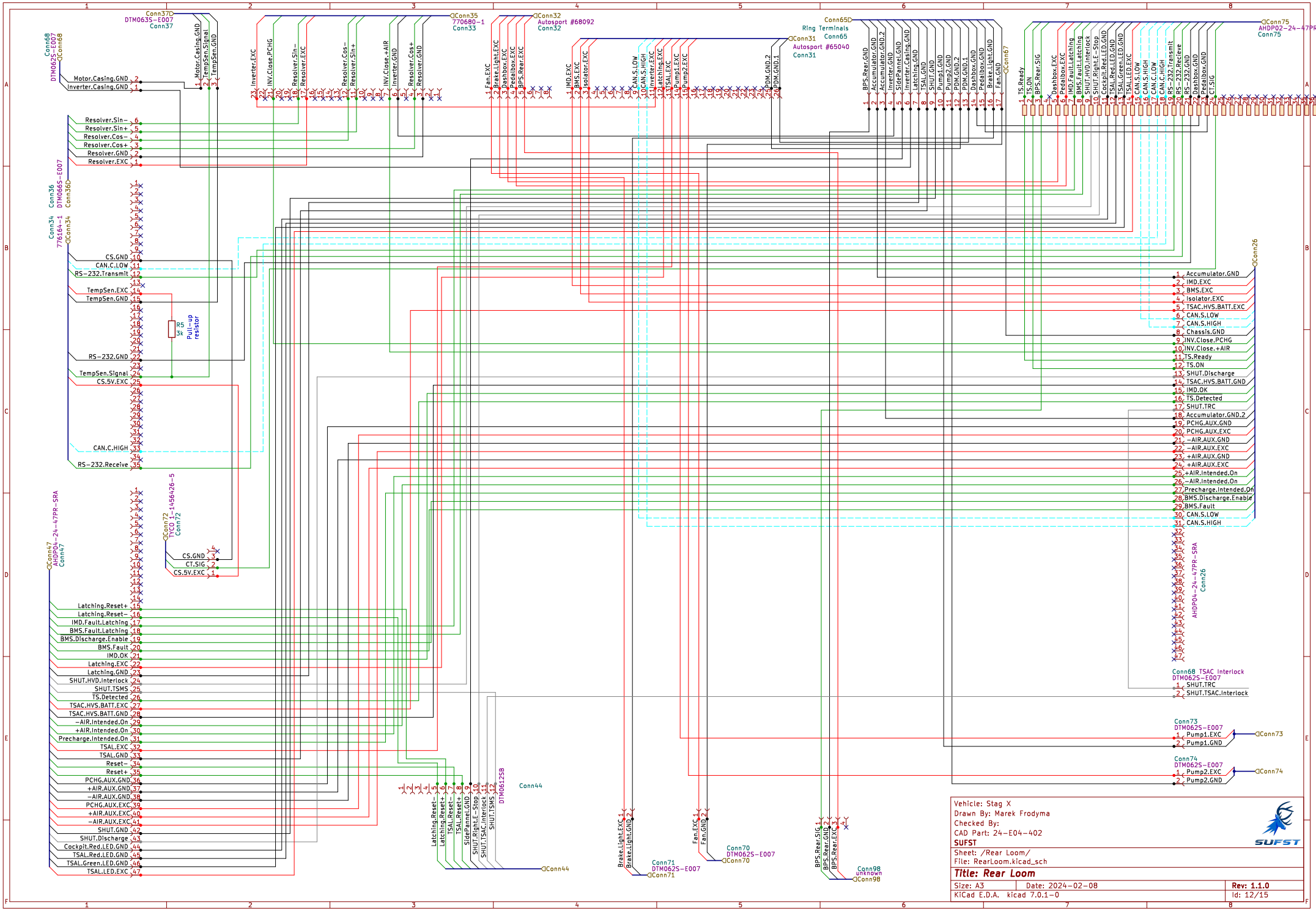
Conn37D
DTM0635-E007
Conn37
Conn68
DTM0625-E007
Conn68
Motor.Casing.GND
Inverter.Casing.GND
Motor.Casing.GND
TempSen.Signal
TempSen.GND
Conn35
770680-1
Conn35
Conn32
Autosport #68092
Conn32
Conn65D
Ring Terminals
Conn65
Conn31
Autosport #65040
Conn31
Conn75
AHDP02-24-47PR-SRA
Conn75
Resolver.Sin-
Resolver.Sin+
Resolver.Cos-
Resolver.Cos+
Resolver.GND
Resolver.EXC
Conn36
DTM0665-E007
Conn36D
Conn34
776164-1
Conn34
CS.GND
CAN.C.LOW
RS-232.Transmit
TempSen.EXC
TempSen.GND
R5
3k
Pull-up resistor
RS-232.GND
TempSen.Signal
CS.5V.EXC
CAN.C.HIGH
RS-232.Receive
Conn47
AHDP04-24-47PR-SRA
Conn47
Conn72
TYCO 1-1456426-5
Conn72
CS.GND
CT.SIG
CS.5V.EXC
Latching.Reset+
Latching.Reset-
IMD.Fault.Latching
BMS.Fault.Latching
BMS.Discharge.Enable
BMS.Fault
IMD.OK
Latching.EXC
Latching.GND
SHUT.HVD.Interlock
SHUT.TSMS
TS.Detected
TSAC.HVS.BATT.EXC
TSAC.HVS.BATT.GND
-AIR.Intended.On
+AIR.Intended.On
Precharge.Intended.On
TSAL.EXC
TSAL.GND
Reset-
Reset+
PCHG.AUX.GND
+AIR.AUX.GND
-AIR.AUX.GND
PCHG.AUX.EXC
+AIR.AUX.EXC
-AIR.AUX.EXC
SHUT.GND
SHUT.Discharge
Cockpit.Red.LED.GND
TSAL.Red.LED.GND
TSAL.Green.LED.GND
TSAL.LED.EXC
Conn44
DTM06125B
Conn26
AHDP04-24-47PR-SRA
Conn68 TSAC Interlock
DTM0625-E007
SHUT.TRC
SHUT.TSAC.Interlock
Conn73
DTM0625-E007
Pump1.EXC
Pump1.GND
Conn74
DTM0625-E007
Pump2.EXC
Pump2.GND
Conn71
DTM0625-E007
Conn70
DTM0625-E007
Conn98
unknown
Vehicle: Stag X
Drawn By: Marek Frodyma
Checked By:
CAD Part: 24-E04-402
SUFST
Sheet: /Rear Loom/
File: RearLoom.kicad_sch
Title: Rear Loom
Size: A3
Date: 2024-02-08
Rev: 1.1.0
KiCad E.D.A. kicad 7.0.1-0
Id: 12/15

tsal unit needs
a series resistor
for each LED.

EDIT: LEDs have
internal regulators
therefore resistors
not necessary

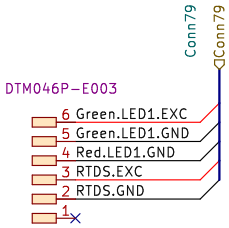

The cables are then
spliced internally
inside the TSAL unit
to the LEDs

Vehicle: Stag X
Drawn By: Marek Frodyma
Checked By:
CAD Part:
SUFST

Sheet: /TSAL Unit/
File: TSALUnit.kicad_sch

Title: TSAL Unit

Size: A4	Date: 2024-02-11	**Rev: 1.1.0**
KiCad E.D.A. kicad 7.0.1-0		Id: 13/15

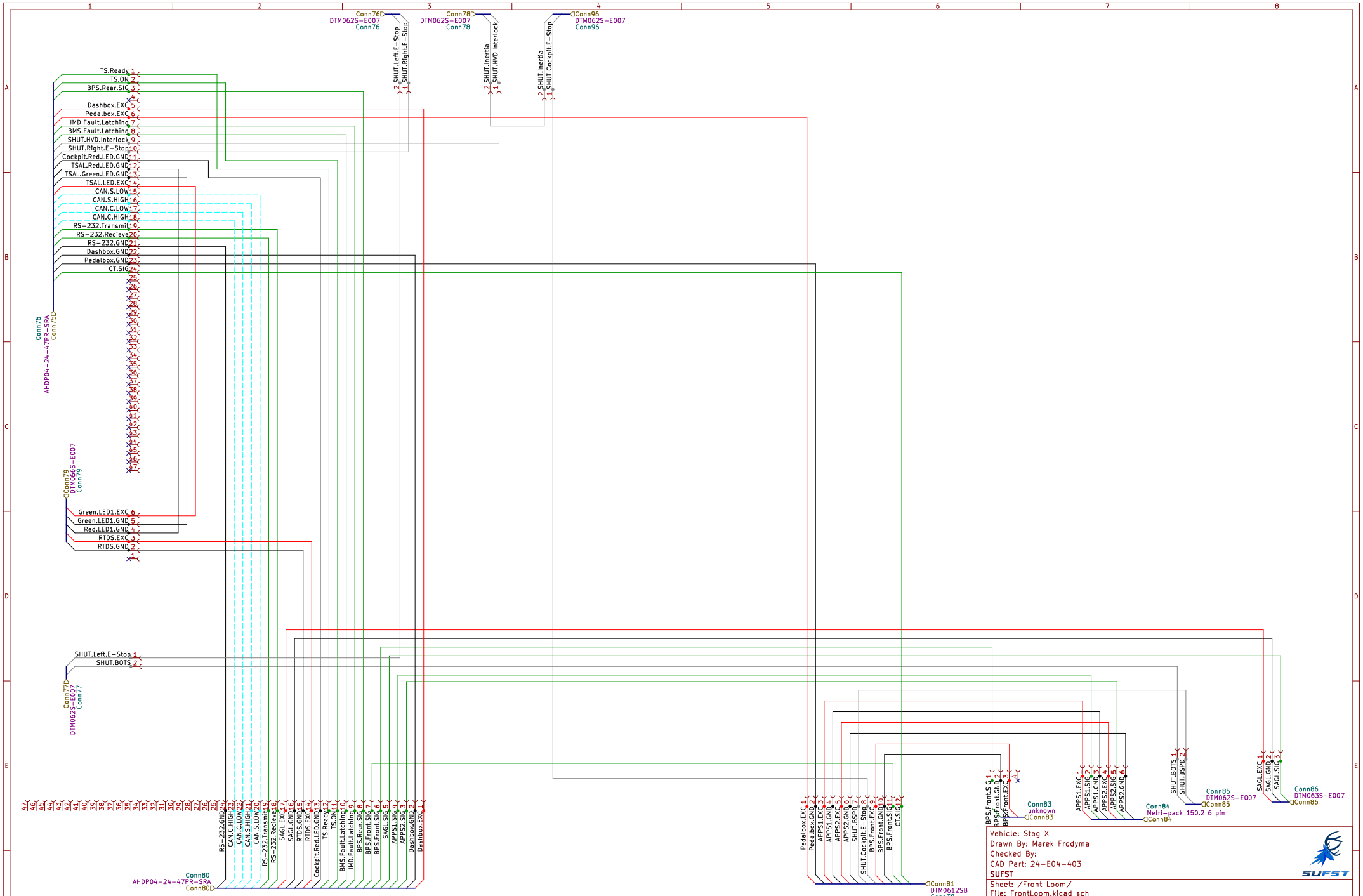
Conn76D
DTM0625-E007
Conn76
Conn78D
DTM0625-E007
Conn78
Conn96
DTM0625-E007
Conn96
2 SHUT.Left.E-Stop
1 SHUT.Right.E-Stop
2 SHUT.Inertia
1 SHUT.HVD.Interlock
2 SHUT.Inertia
1 SHUT.Cockpit.E-Stop
TS.Ready 1
TS.ON 2
BPS.Rear.SIG 3
4
Dashbox.EXC 5
Pedalbox.EXC 6
IMD.Fault.Latching 7
BMS.Fault.Latching 8
SHUT.HVD.Interlock 9
SHUT.Right.E-Stop 10
Cockpit.Red.LED.GND 11
TSAL.Red.LED.GND 12
TSAL.Green.LED.GND 13
TSAL.LED.EXC 14
CAN.S.LOW 15
CAN.S.HIGH 16
CAN.C.LOW 17
CAN.C.HIGH 18
RS-232.Transmit 19
RS-232.Recieve 20
RS-232.GND 21
Dashbox.GND 22
Pedalbox.GND 23
CT.SIG 24
Conn75
AHDP04-24-47PR-SRA
Conn75D
Conn79
DTM0665-E007
Conn79
Green.LED1.EXC 6
Green.LED1.GND 5
Red.LED1.GND 4
RTDS.EXC 3
RTDS.GND 2
SHUT.Left.E-Stop 1
SHUT.BOTS 2
Conn77D
DTM0625-E007
Conn77
Conn80
AHDP04-24-47PR-SRA
Conn80D
RS-232.GND 24
CAN.C.HIGH 23
CAN.C.LOW 22
CAN.S.HIGH 21
CAN.S.LOW 20
RS-232.Transmit 19
RS-232.Recieve 18
SAGL.EXC 17
SAGL.GND 16
RTDS.GND 15
RTDS.EXC 14
Cockpit.Red.LED.GND 13
TS.Ready 12
TS.ON 11
BMS.Fault.Latching 10
IMD.Fault.Latching 9
BPS.Rear.SIG 8
BPS.Front.SIG 7
SAGL.SIG 6
APPS1.SIG 5
APPS2.SIG 4
Dashbox.GND 3
Dashbox.EXC 2
Dashbox.EXC 1
Pedalbox.EXC 1
Pedalbox.GND 2
APPS1.EXC 3
APPS1.GND 4
APPS2.EXC 5
APPS2.GND 6
SHUT.BSPD 7
SHUT.Cockpit.E-Stop 8
BPS.Front.EXC 9
BPS.Front.GND 10
BPS.Front.SIG 11
CT.SIG 12
Conn81
DTM0612SB
Conn38
BPS.Front.SIG 1
BPS.Front.GND 2
BPS.Front.EXC 3
4
Conn83
unknown
Conn83
APPS1.EXC 1
APPS1.SIG 2
APPS1.GND 3
APPS2.EXC 4
APPS2.SIG 5
APPS2.GND 6
Conn84
Metri-pack 150.2 6 pin
Conn84
SHUT.BOTS 1
SHUT.BSPD 2
Conn85
DTM0625-E007
Conn85
SAGL.EXC 1
SAGL.GND 2
SAGL.SIG 3
Conn86
DTM0635-E007
Conn86
Vehicle: Stag X
Drawn By: Marek Frodyma
Checked By:
CAD Part: 24-E04-403
SUFST
Sheet: /Front Loom/
File: FrontLoom.kicad_sch
Title: Front Loom
Size: A3
Date: 2024-02-12
Rev: 1.0.0
KiCad E.D.A. kicad 7.0.1-0
Id: 14/15

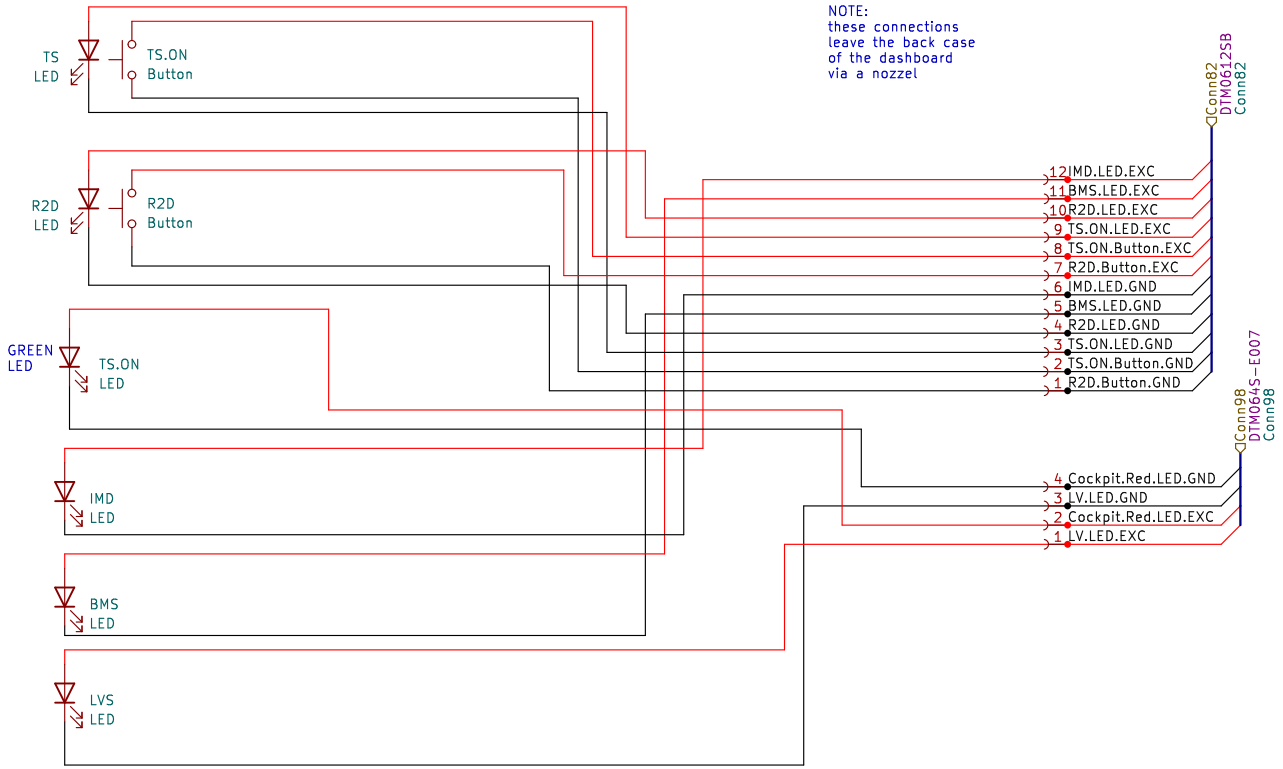

Vehicle: Stag X
Drawn By: Marek Frodyma
Checked By:
CAD Part:
SUFST

Sheet: /Dashboard/
File: Dashboard.kicad_sch

Title: Dashboard

Size: A4	Date: 2024-02-21	**Rev: 1.0.0**
KiCad E.D.A. kicad 7.0.1-0		Id: 15/15