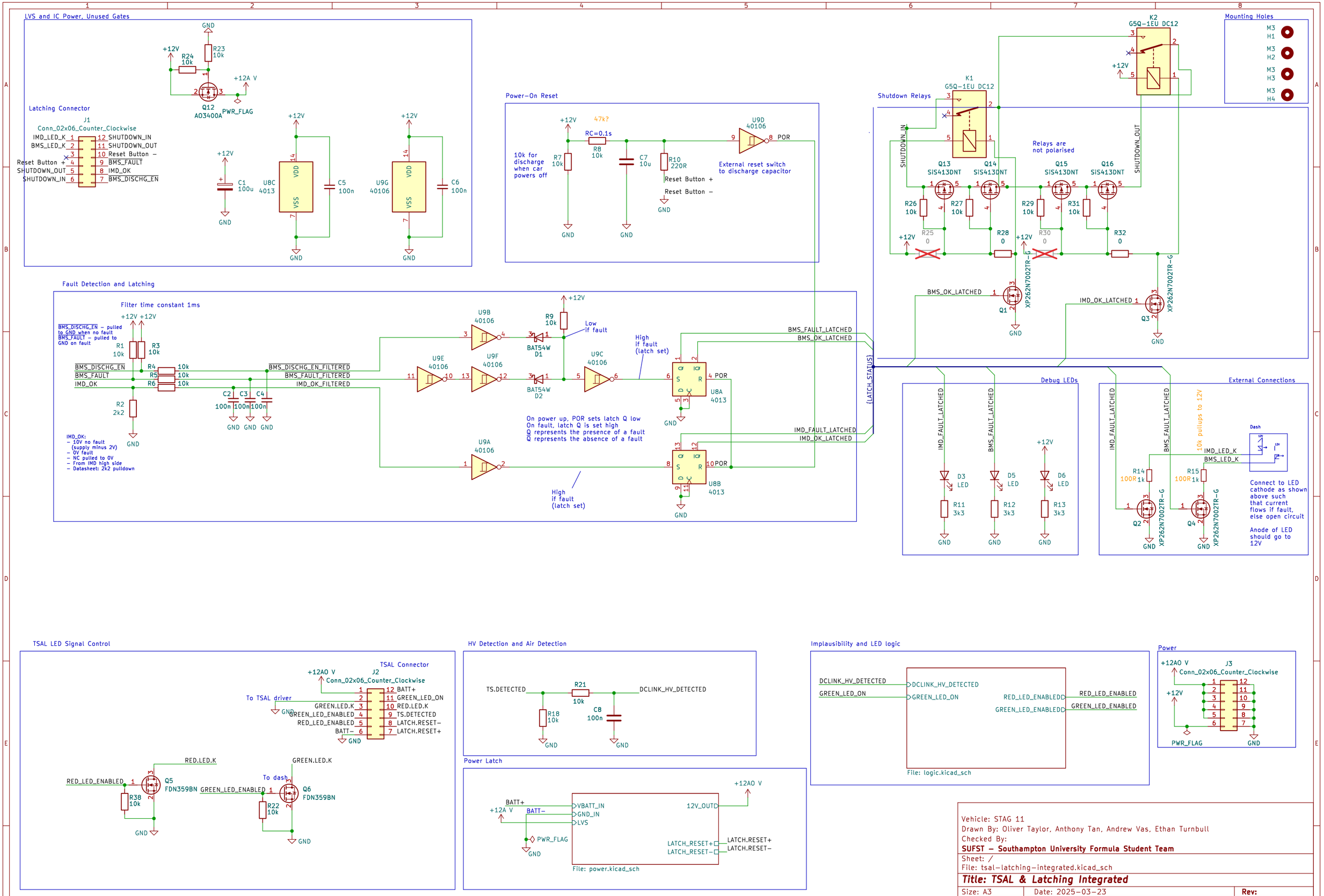

Vehicle: STAG 11
Drawn By: Oliver Taylor, Anthony Tan, Andrew Vas, Ethan Turnbull
Checked By:
SUFST – Southampton University Formula Student Team
Sheet: /
File: tsal-latching-integrated.kicad_sch

Title: TSAL & Latching Integrated

Size: A3	Date: 2025-03-23	**Rev:**
KiCad E.D.A. 9.0.0		Id: 1/3

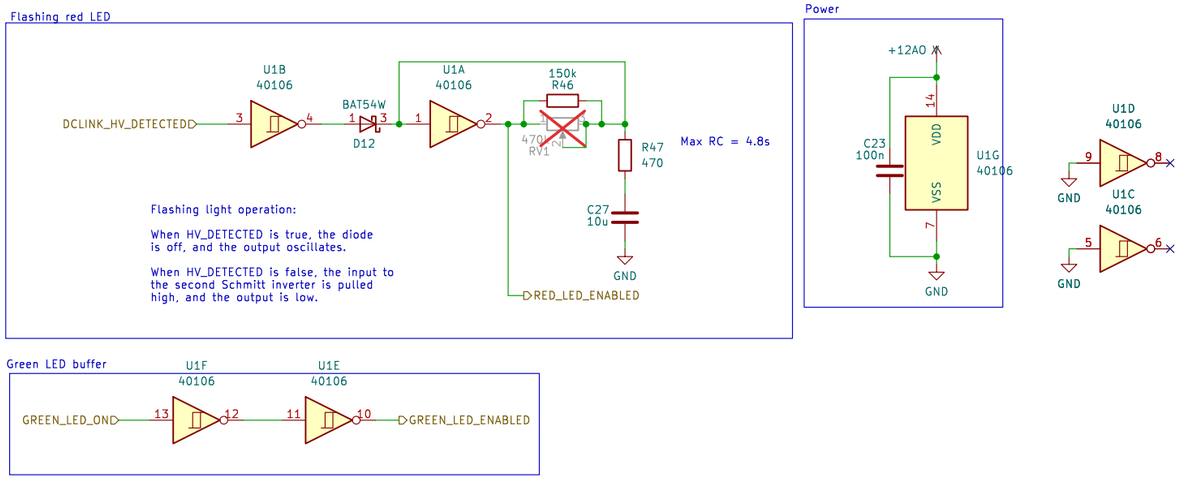

Marek Frodyma

STAG 9
SUFST – Southampton University Formula Student Team

Sheet: /LED logic/
File: logic.kicad_sch

Title: HV Sense

Size: A3	Date: 2023-05-11	**Rev: 1.1.1**
KiCad E.D.A. 9.0.0		Id: 2/3

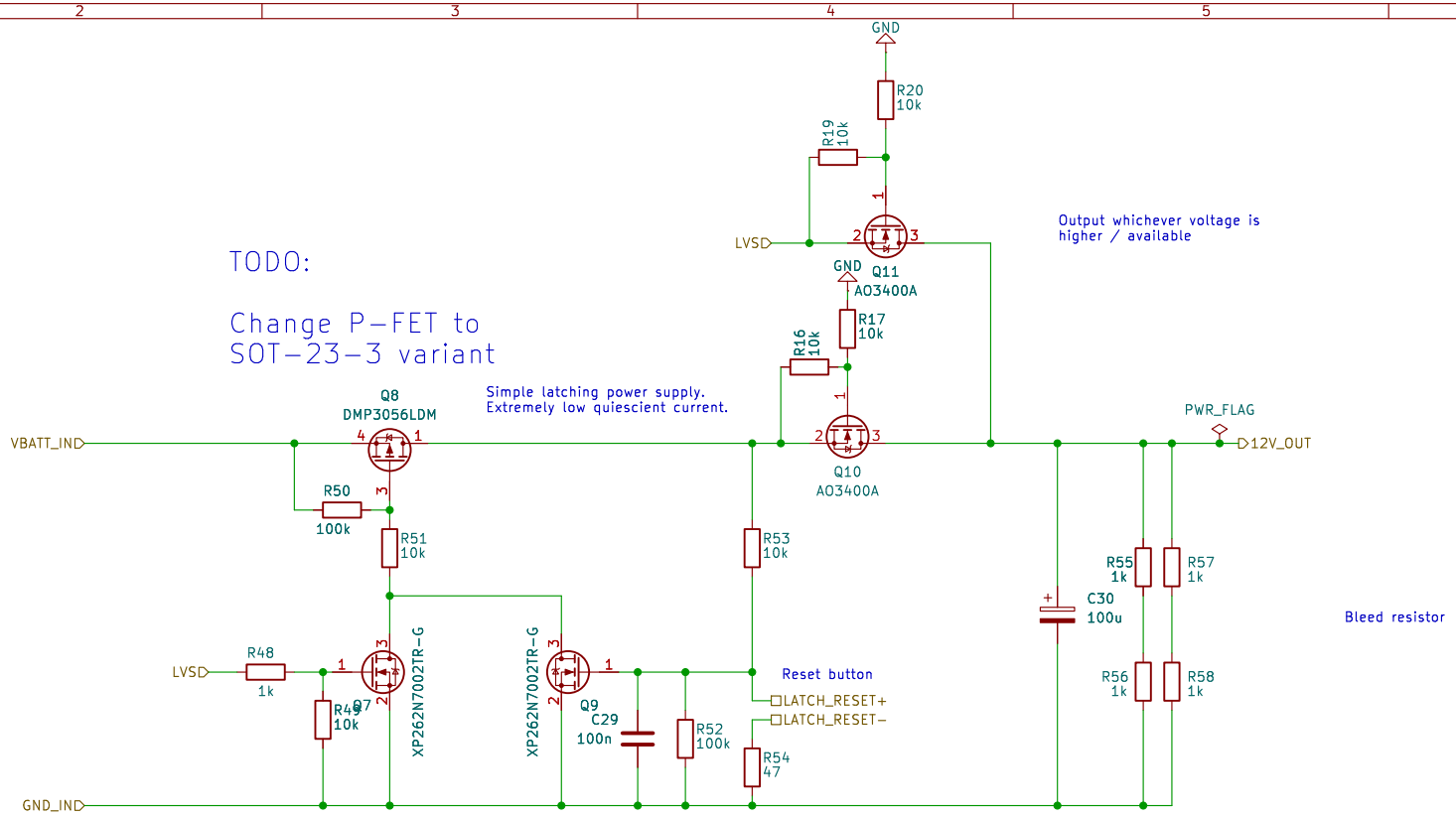

Sheet: /Power Latch/
File: power.kicad_sch

Title:

Size: A4	Date:	Rev:
KiCad E.D.A. 9.0.0		Id: 3/3