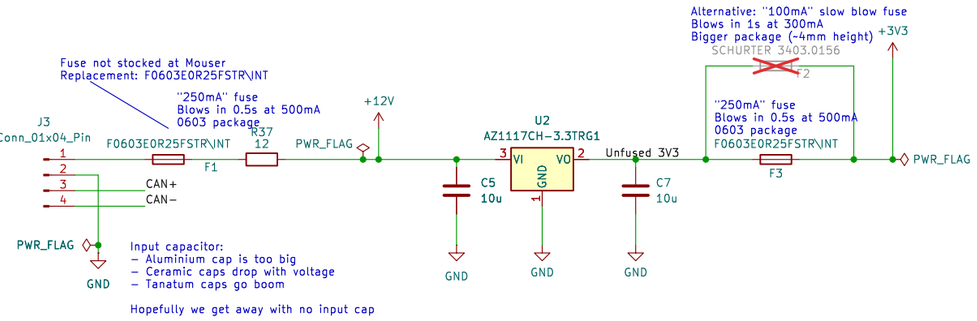

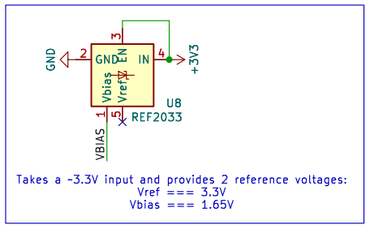

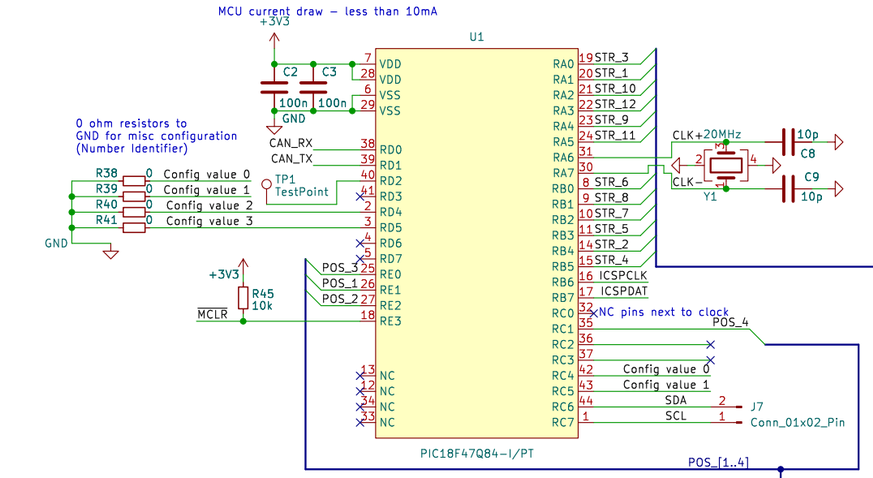

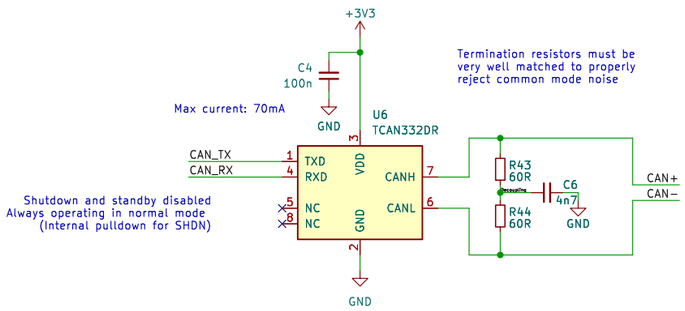

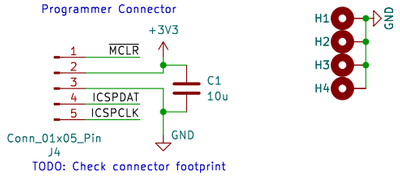

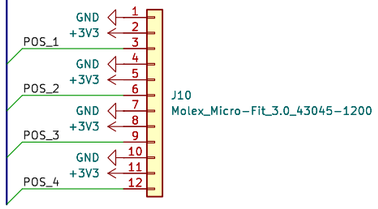

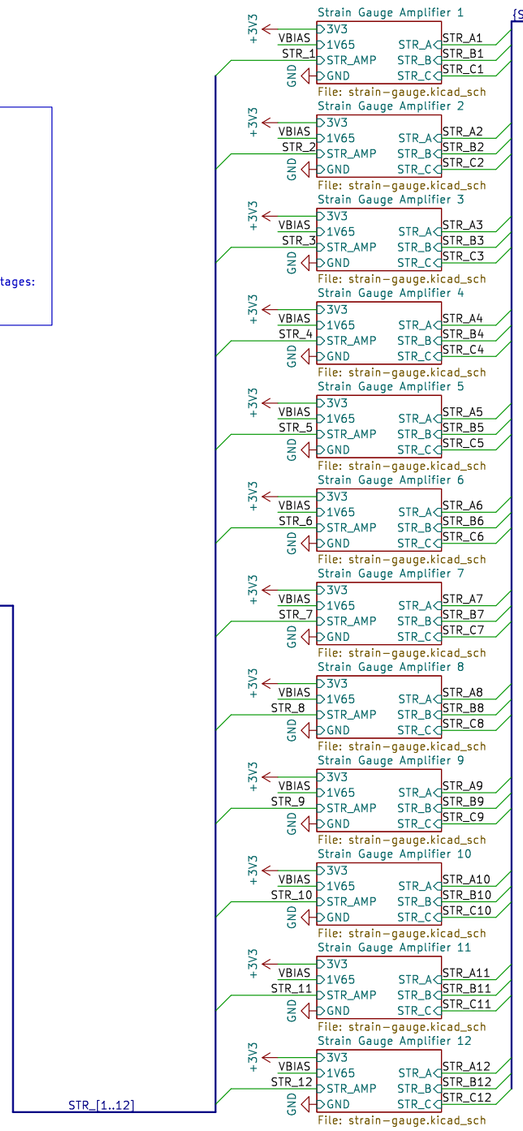

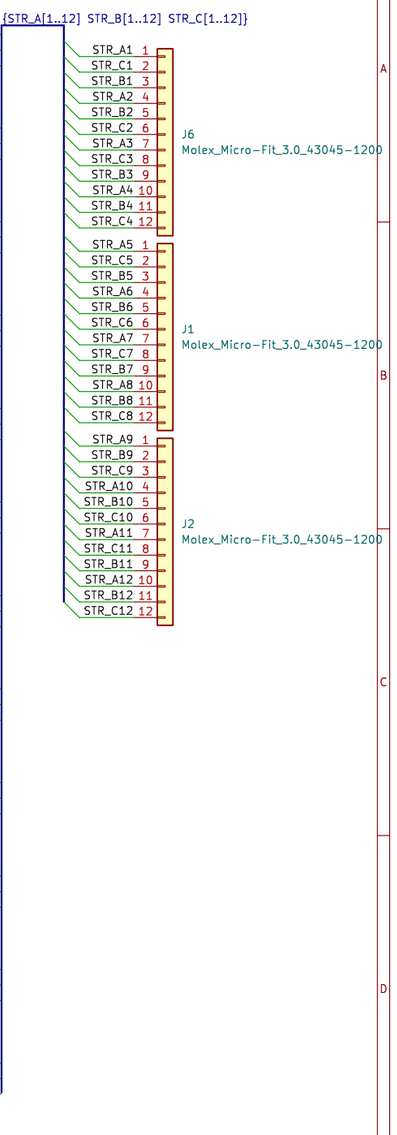

Sheet: /
File: sensor-board.kicad_sch

Title: Sensor Board

Size: A3	Date: 27-09-2024	Rev: 1.0.0
KiCad E.D.A. 9.0.1		Id: 1/13

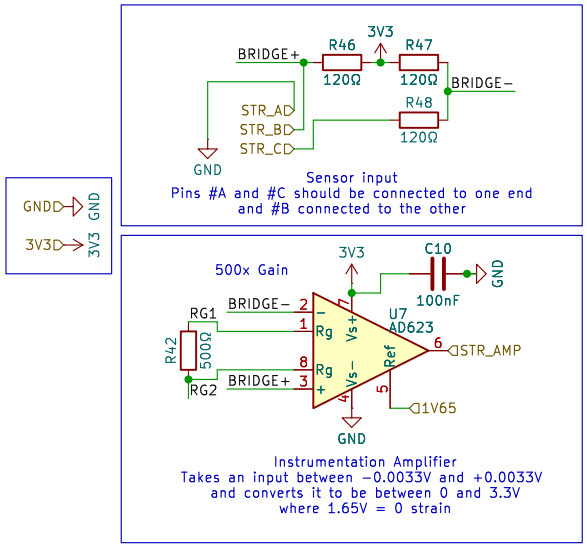

Sheet: /Strain Gauge Amplifier 1/
File: strain−gauge.kicad_sch

Title:

Size: A4	Date: 27−09−2024	**Rev: 1.0.0**
KiCad E.D.A. 9.0.1		Id: 2/13

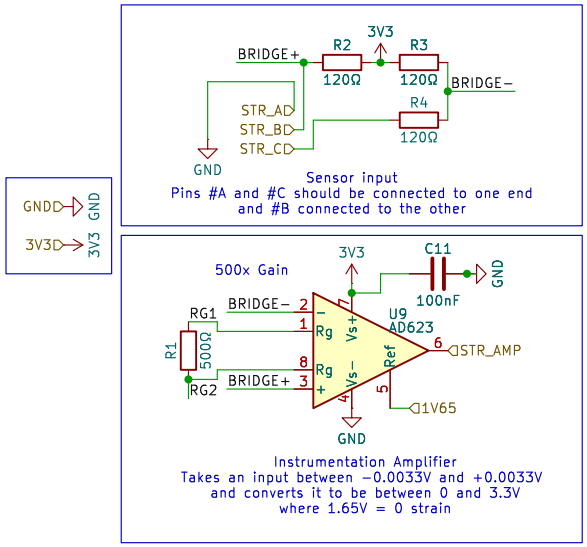

Sheet: /Strain Gauge Amplifier 2/
File: strain−gauge.kicad_sch

Title:

Size: A4	Date: 27−09−2024	**Rev: 1.0.0**
KiCad E.D.A. 9.0.1		Id: 3/13

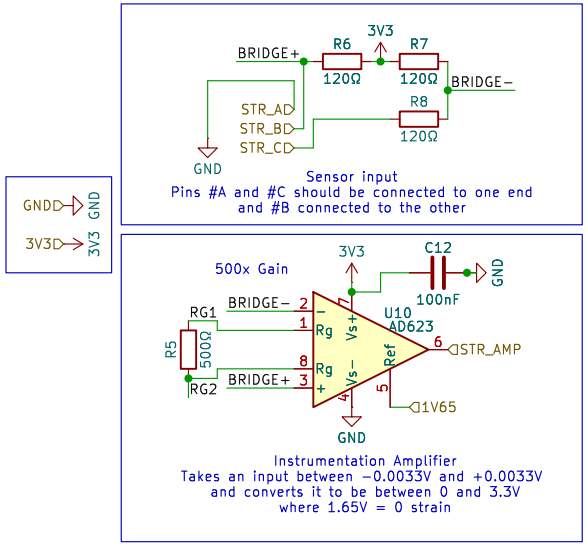

Sheet: /Strain Gauge Amplifier 3/
File: strain−gauge.kicad_sch

Title:

Size: A4	Date: 27−09−2024	**Rev: 1.0.0**
KiCad E.D.A. 9.0.1		Id: 4/13

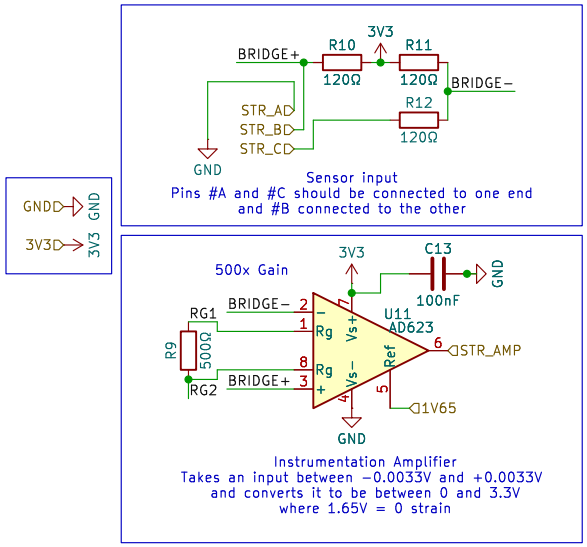

Sheet: /Strain Gauge Amplifier 4/
File: strain−gauge.kicad_sch

Title:

Size: A4	Date: 27−09−2024	**Rev: 1.0.0**
KiCad E.D.A. 9.0.1		Id: 5/13

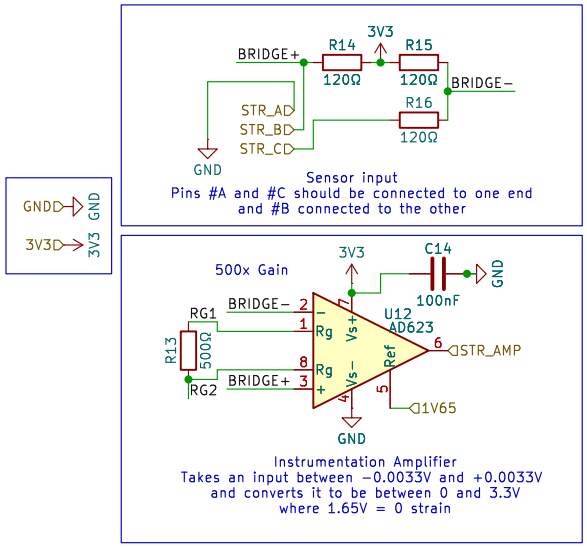

Sheet: /Strain Gauge Amplifier 5/
File: strain−gauge.kicad_sch

Title:

Size: A4	Date: 27−09−2024	**Rev: 1.0.0**
KiCad E.D.A. 9.0.1		Id: 6/13

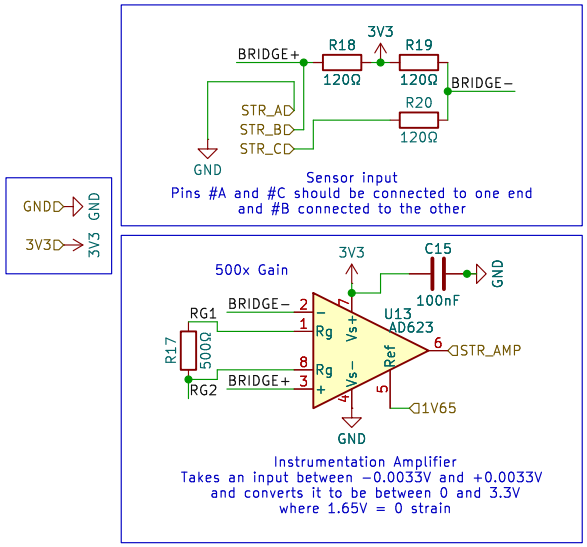

Sheet: /Strain Gauge Amplifier 6/
File: strain−gauge.kicad_sch

Title:

Size: A4	Date: 27−09−2024	**Rev: 1.0.0**
KiCad E.D.A. 9.0.1		Id: 7/13

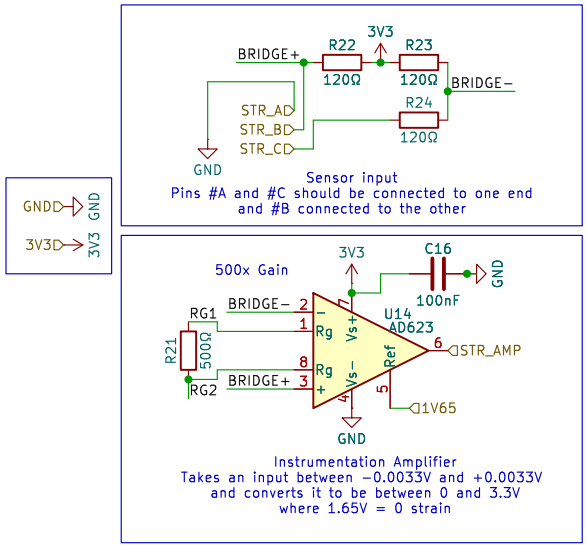

Sheet: /Strain Gauge Amplifier 7/
File: strain−gauge.kicad_sch

Title:

Size: A4	Date: 27−09−2024	**Rev: 1.0.0**
KiCad E.D.A. 9.0.1		Id: 8/13

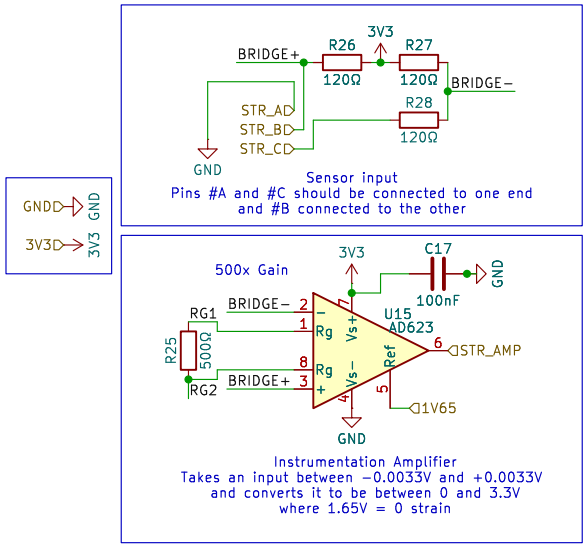

Sheet: /Strain Gauge Amplifier 8/
File: strain−gauge.kicad_sch

Title:

Size: A4	Date: 27−09−2024	**Rev: 1.0.0**
KiCad E.D.A. 9.0.1		Id: 9/13

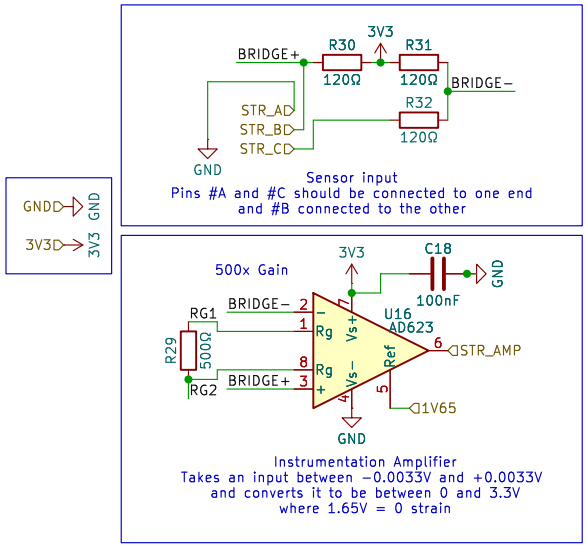

Sheet: /Strain Gauge Amplifier 9/
File: strain−gauge.kicad_sch

Title:

Size: A4	Date: 27−09−2024	**Rev: 1.0.0**
KiCad E.D.A. 9.0.1		Id: 10/13

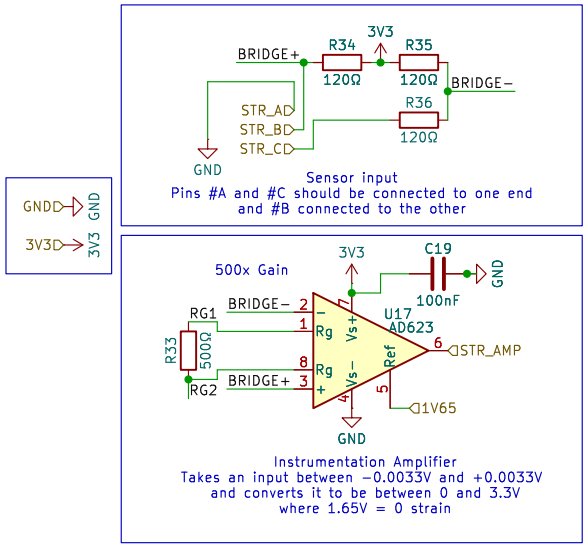

Sheet: /Strain Gauge Amplifier 10/
File: strain−gauge.kicad_sch

Title:

Size: A4	Date: 27−09−2024	**Rev: 1.0.0**
KiCad E.D.A. 9.0.1		Id: 11/13

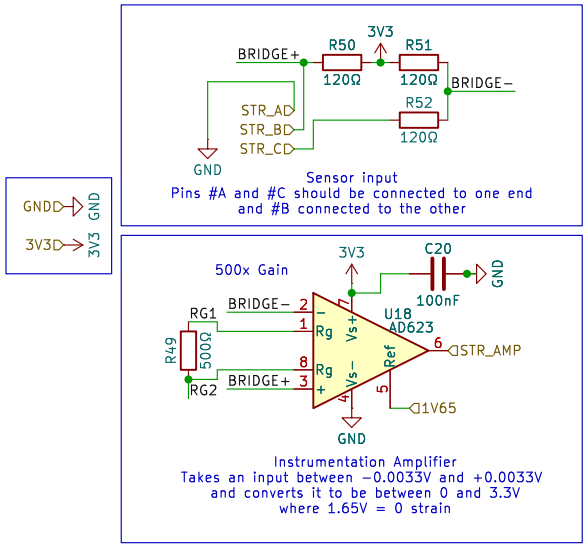

Sheet: /Strain Gauge Amplifier 11/
File: strain−gauge.kicad_sch

Title:

Size: A4	Date: 27−09−2024	**Rev: 1.0.0**
KiCad E.D.A. 9.0.1		Id: 12/13

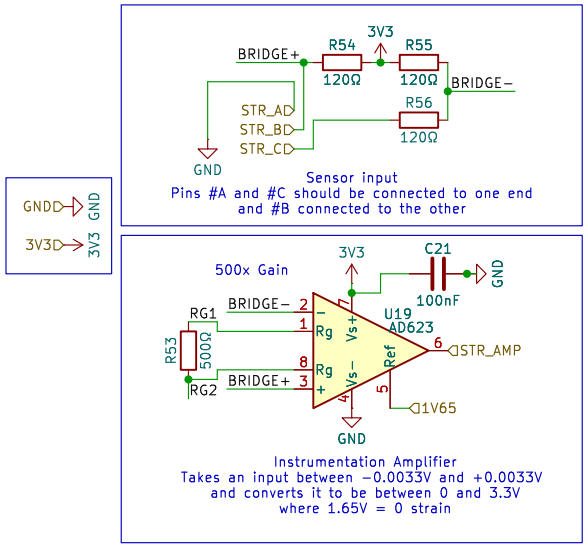

Sheet: /Strain Gauge Amplifier 12/
File: strain−gauge.kicad_sch

Title:

Size: A4	Date: 27−09−2024	**Rev: 1.0.0**
KiCad E.D.A. 9.0.1		Id: 13/13