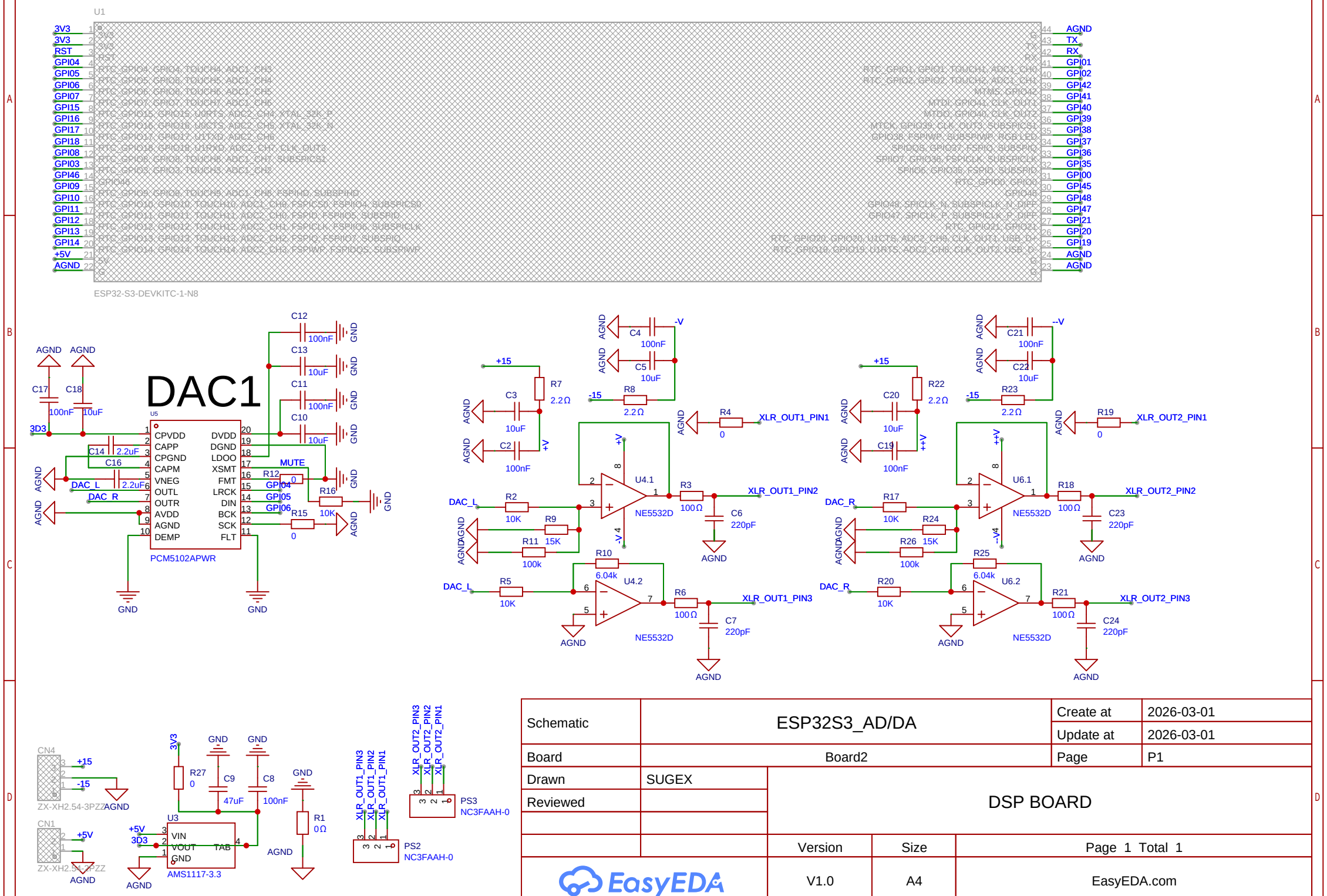
U1
3V3
RST
GPI04
GPI05
GPI06
GPI07
GPI15
GPI16
GPI17
GPI18
GPI08
GPI03
GPI46
GPI09
GPI10
GPI11
GPI12
GPI13
GPI14
+5V
AGND
TX
RX
GPI01
GPI02
GPI42
GPI41
GPI40
GPI39
GPI38
GPI37
GPI36
GPI35
GPI00
GPI45
GPI48
GPI47
GPI21
GPI20
GPI19
ESP32-S3-DEVKITC-1-N8
DAC1
U5
CPVDD
CAPP
CPGND
CAPM
VNEG
OUTL
OUTR
AVDD
AGND
DEMP
DVDD
DGND
LDOO
XSMT
FMT
LRCK
DIN
BCK
SCK
FLT
MUTE
DAC_L
DAC_R
PCM5102APWR
C12
C13
C11
C10
C17
C18
C14
C16
R12
R15
R16
GND
U4.1
U4.2
U6.1
U6.2
NE5532D
R7
R8
R4
R3
R2
R9
R11
R10
R5
R6
R22
R23
R19
R18
R17
R24
R26
R25
R20
R21
C4
C5
C3
C2
C21
C22
C20
C19
C6
C7
C23
C24
XLR_OUT1_PIN1
XLR_OUT1_PIN2
XLR_OUT1_PIN3
XLR_OUT2_PIN1
XLR_OUT2_PIN2
XLR_OUT2_PIN3
CN4
CN1
ZX-XH2.54-3PZZ
U3
VIN
VOUT
TAB
AMS1117-3.3
R27
C9
C8
R1
PS2
PS3
NC3FAAH-0
Schematic
ESP32S3_AD/DA
Create at
2026-03-01
Update at
2026-03-01
Board
Board2
Page
P1
Drawn
SUGEX
Reviewed
DSP BOARD
Version
Size
Page 1 Total 1
V1.0
A4
EasyEDA.com