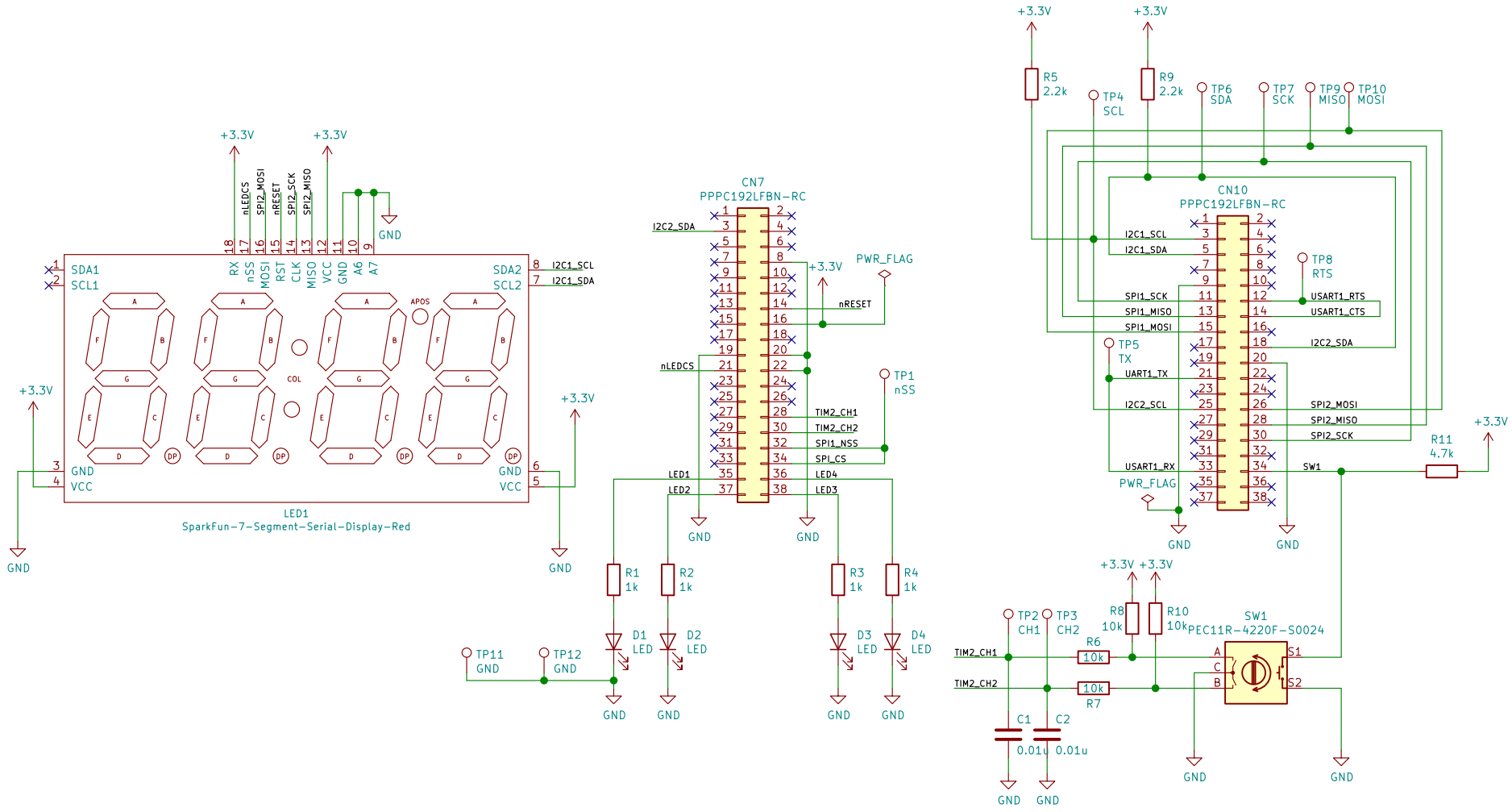

CODEC control test jig "Kiritsubo" v2.
This jig can test two type of codec board
by two audio peripheral and two control protocol.

Sheet: /
File: Akashi-01.sch

Title: Kiritsubo v2

Size: A4	Date: 2019/Mar/27	Rev:
KiCad E.D.A. kicad 5.1.0-060a0da80ubuntu16.04.1		Id: 1/1