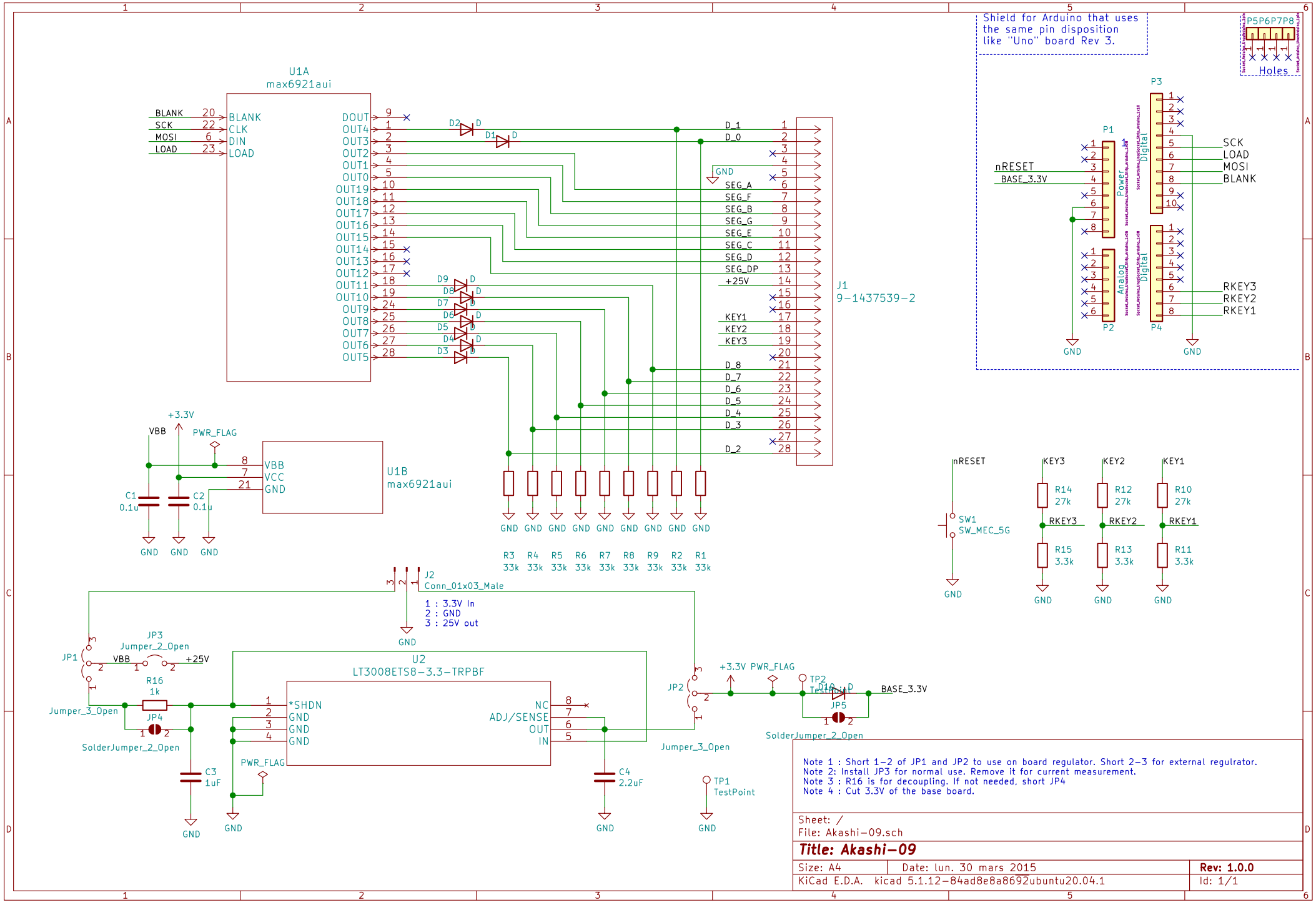
Shield for Arduino that uses the same pin disposition like "Uno" board Rev 3.
P5P6P7P8
Holes
U1A
max6921aui
BLANK
SCK
MOSI
LOAD
DOUT
OUT4
OUT3
OUT2
OUT1
OUT0
OUT19
OUT18
OUT17
OUT16
OUT15
OUT14
OUT13
OUT12
OUT11
OUT10
OUT9
OUT8
OUT7
OUT6
OUT5
D_1
D_0
GND
SEG_A
SEG_F
SEG_B
SEG_G
SEG_E
SEG_C
SEG_D
SEG_DP
+25V
KEY1
KEY2
KEY3
D_8
D_7
D_6
D_5
D_4
D_3
D_2
J1
9-1437539-2
U1B
max6921aui
VBB
VCC
+3.3V
PWR_FLAG
C1
0.1u
C2
0.1u
R3 33k
R4 33k
R5 33k
R6 33k
R7 33k
R8 33k
R9 33k
R2 33k
R1 33k
P3
P1
P2
P4
Power
Analog
Digital
nRESET
BASE_3.3V
SCK
LOAD
MOSI
BLANK
RKEY3
RKEY2
RKEY1
SW1
SW_MEC_5G
R14 27k
R12 27k
R10 27k
R15 3.3k
R13 3.3k
R11 3.3k
J2
Conn_01x03_Male
1 : 3.3V In
2 : GND
3 : 25V out
JP1
JP3
Jumper_2_Open
VBB
+25V
R16
1k
Jumper_3_Open
JP4
SolderJumper_2_Open
U2
LT3008ETS8-3.3-TRPBF
*SHDN
NC
ADJ/SENSE
OUT
IN
C3
1uF
C4
2.2uF
JP2
TP2
TestPoint
D10
JP5
BASE_3.3V
TP1
TestPoint
Note 1 : Short 1-2 of JP1 and JP2 to use on board regulator. Short 2-3 for external regulrator.
Note 2: Install JP3 for normal use. Remove it for current measurement.
Note 3 : R16 is for decoupling. If not needed, short JP4
Note 4 : Cut 3.3V of the base board.
Sheet: /
File: Akashi-09.sch
Title: Akashi-09
Size: A4
Date: lun. 30 mars 2015
Rev: 1.0.0
KiCad E.D.A. kicad 5.1.12-84ad8e8a8692ubuntu20.04.1
Id: 1/1