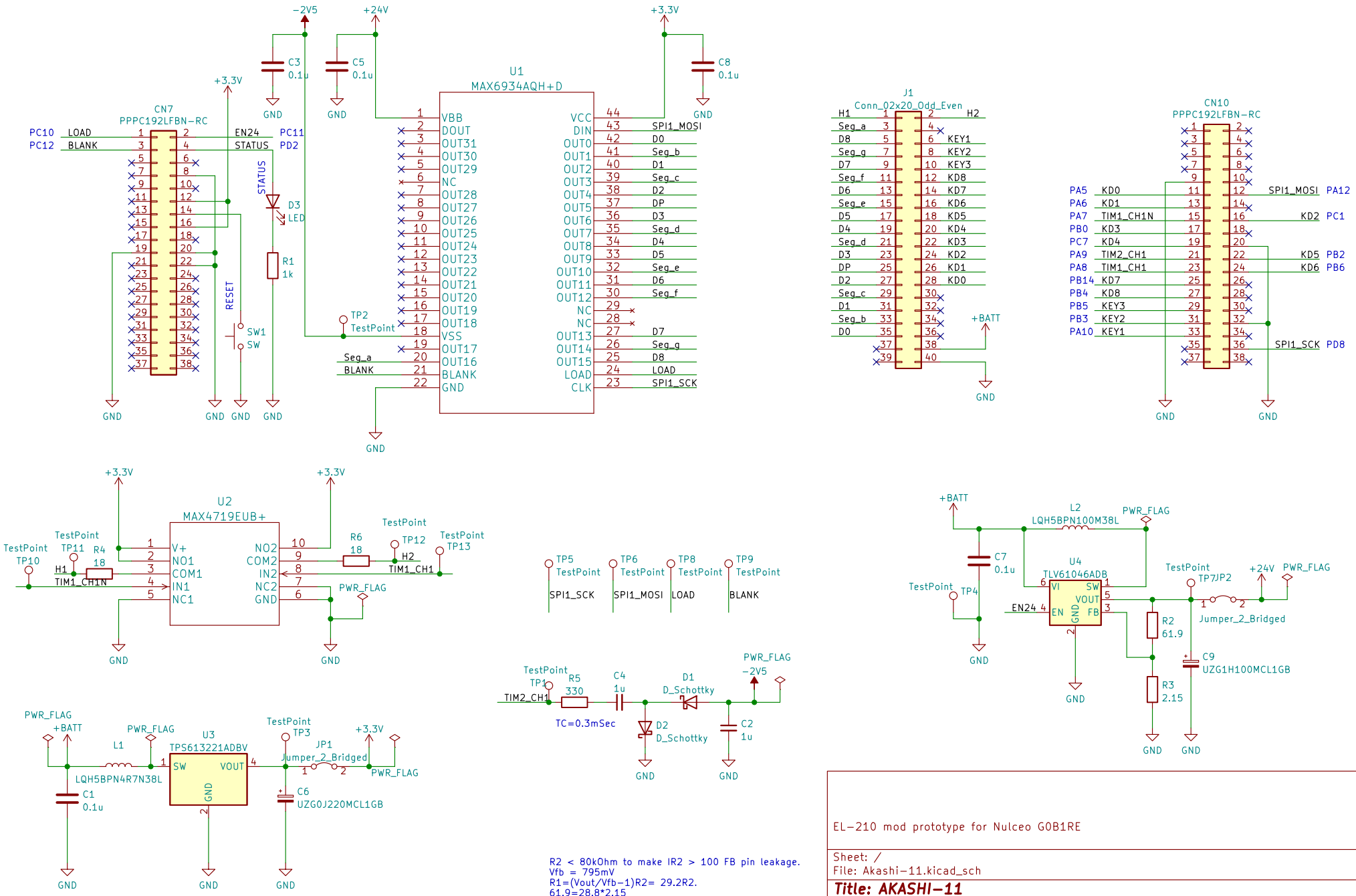

EL-210 mod prototype for Nulceo G0B1RE

Sheet: /
File: Akashi-11.kicad_sch

Title: AKASHI-11

Size: A4	Date: 2022-10-10	Rev: v1.0.0
KiCad E.D.A. kicad 6.0.2+dfsg-1		Id: 1/1