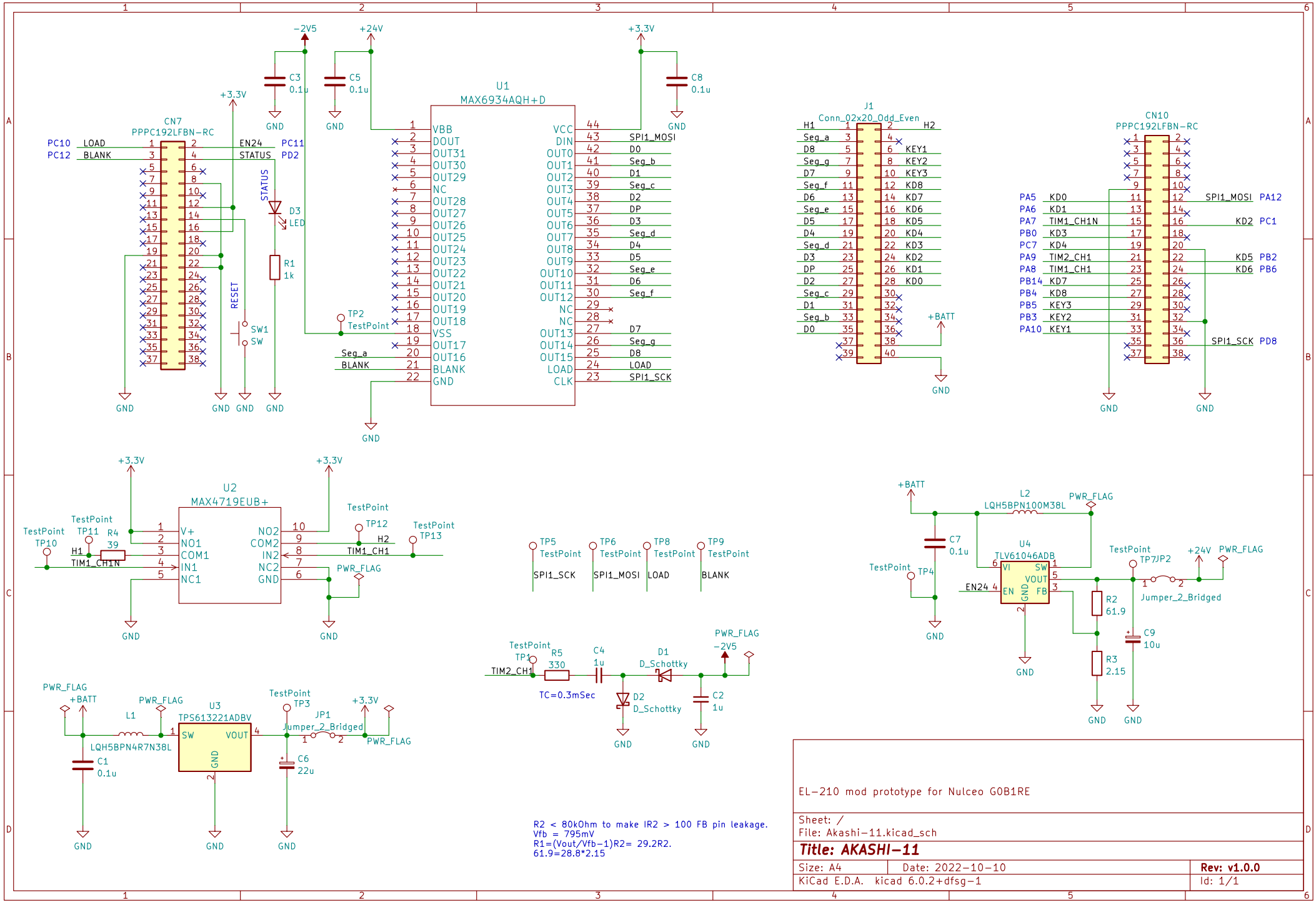
CN7
PPPC192LFBN-RC
PC10 LOAD
PC12 BLANK
EN24 PC11
STATUS PD2
STATUS
D3
LED
R1
1k
RESET
SW1
SW
TP2
TestPoint
Seg_a
BLANK
U1
MAX6934AQH+D
VBB
DOUT
OUT31
OUT30
OUT29
NC
OUT28
OUT27
OUT26
OUT25
OUT24
OUT23
OUT22
OUT21
OUT20
OUT19
OUT18
VSS
OUT17
OUT16
BLANK
GND
VCC
DIN
OUT0
OUT1
OUT2
OUT3
OUT4
OUT5
OUT6
OUT7
OUT8
OUT9
OUT10
OUT11
OUT12
NC
NC
OUT13
OUT14
OUT15
LOAD
CLK
SPI1_MOSI
D0
Seg_b
D1
Seg_c
D2
DP
D3
Seg_d
D4
D5
Seg_e
D6
Seg_f
D7
Seg_g
D8
LOAD
SPI1_SCK
C3
0.1u
C5
0.1u
C8
0.1u
-2V5
+24V
+3.3V
GND
J1
Conn_02x20_Odd_Even
H1
H2
Seg_a
D8
KEY1
Seg_g
KEY2
D7
KEY3
Seg_f
KD8
D6
KD7
Seg_e
KD6
D5
KD5
D4
KD4
Seg_d
KD3
D3
KD2
DP
KD1
D2
KD0
Seg_c
D1
Seg_b
D0
+BATT
CN10
PPPC192LFBN-RC
PA5 KD0
PA6 KD1
PA7 TIM1_CH1N
PB0 KD3
PC7 KD4
PA9 TIM2_CH1
PA8 TIM1_CH1
PB14 KD7
PB4 KD8
PB5 KEY3
PB3 KEY2
PA10 KEY1
SPI1_MOSI PA12
KD2 PC1
KD5 PB2
KD6 PB6
SPI1_SCK PD8
U2
MAX4719EUB+
V+
NO1
COM1
IN1
NC1
NO2
COM2
IN2
NC2
GND
TestPoint
TP10
TP11
R4
39
H1
TIM1_CH1N
TP12
H2
TP13
TIM1_CH1
PWR_FLAG
TP5
TP6
TP8
TP9
SPI1_SCK
SPI1_MOSI
LOAD
BLANK
TP1
TIM2_CH1
R5
330
C4
1u
D1
D_Schottky
TC=0.3mSec
D2
D_Schottky
C2
1u
-2V5
L2
LQH5BPN100M38L
C7
0.1u
TP4
U4
TLV61046ADB
VI
SW
VOUT
EN
FB
EN24
TP7JP2
Jumper_2_Bridged
R2
61.9
R3
2.15
C9
10u
PWR_FLAG
+BATT
L1
LQH5BPN4R7N38L
C1
0.1u
U3
TPS613221ADBV
SW
VOUT
GND
TP3
JP1
Jumper_2_Bridged
C6
22u
R2 < 80kOhm to make IR2 > 100 FB pin leakage.
Vfb = 795mV
R1=(Vout/Vfb-1)R2= 29.2R2.
61.9=28.8*2.15
EL-210 mod prototype for Nulceo G0B1RE
Sheet: /
File: Akashi-11.kicad_sch
Title: AKASHI-11
Size: A4
Date: 2022-10-10
Rev: v1.0.0
KiCad E.D.A. kicad 6.0.2+dfsg-1
Id: 1/1