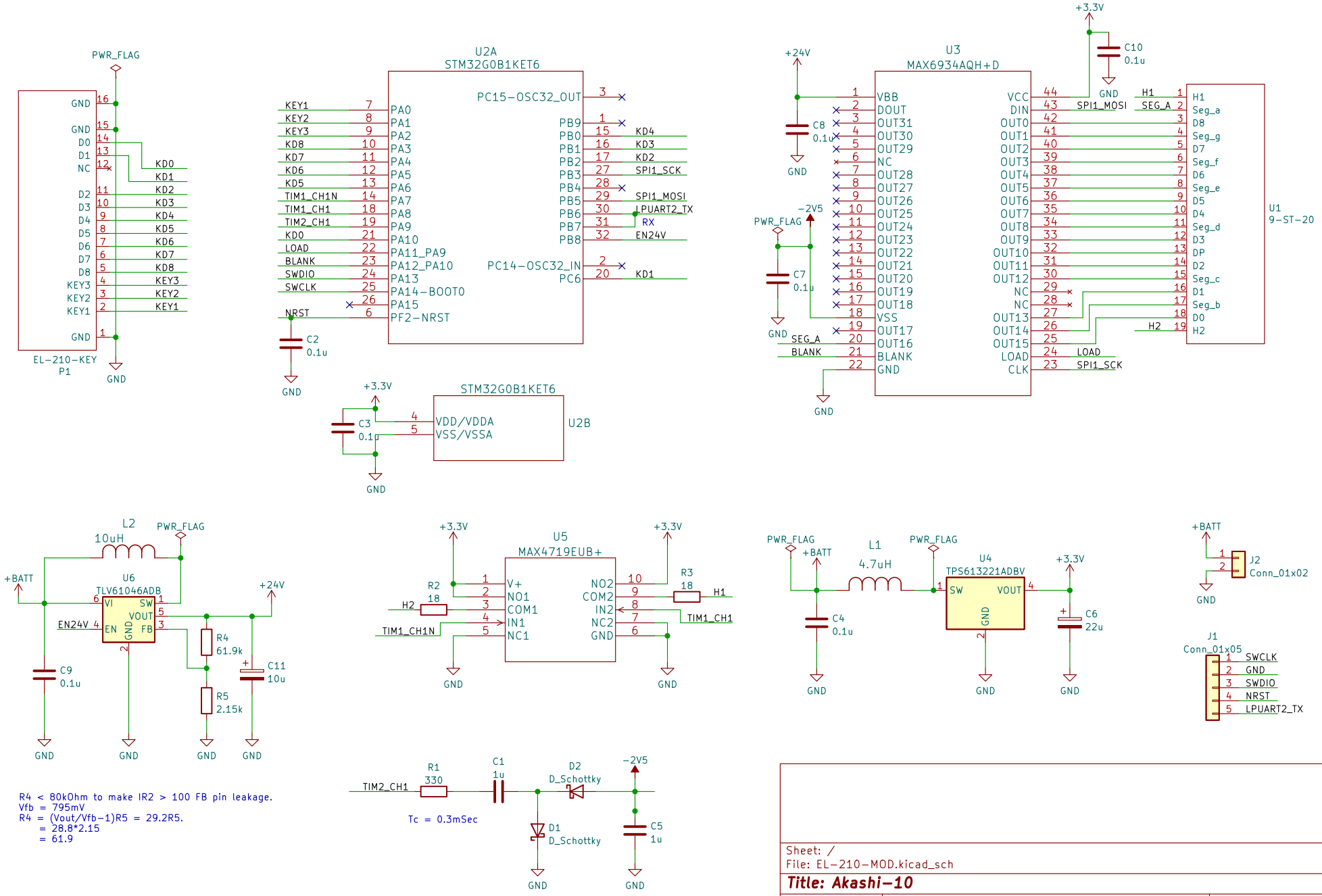
PWR_FLAG
EL-210-KEY
P1
GND
D0
D1
NC
D2
D3
D4
D5
D6
D7
D8
KEY3
KEY2
KEY1
KD0
KD1
KD2
KD3
KD4
KD5
KD6
KD7
KD8
U2A
STM32G0B1KET6
PC15-OSC32_OUT
PA0
PA1
PA2
PA3
PA4
PA5
PA6
PA7
PA8
PA9
PA10
PA11_PA9
PA12_PA10
PA13
PA14-BOOT0
PA15
PF2-NRST
PB9
PB0
PB1
PB2
PB3
PB4
PB5
PB6
PB7
PB8
PC14-OSC32_IN
PC6
TIM1_CH1N
TIM1_CH1
TIM2_CH1
LOAD
BLANK
SWDIO
SWCLK
NRST
SPI1_SCK
SPI1_MOSI
LPUART2_TX
RX
EN24V
C2
0.1u
U2B
VDD/VDDA
VSS/VSSA
C3
0.1u
+3.3V
U3
MAX6934AQH+D
+24V
C8
0.1u
C10
0.1u
-2V5
C7
0.1u
VBB
DOUT
OUT31
OUT30
OUT29
NC
OUT28
OUT27
OUT26
OUT25
OUT24
OUT23
OUT22
OUT21
OUT20
OUT19
OUT18
VSS
OUT17
OUT16
BLANK
GND
VCC
DIN
OUT0
OUT1
OUT2
OUT3
OUT4
OUT5
OUT6
OUT7
OUT8
OUT9
OUT10
OUT11
OUT12
OUT13
OUT14
OUT15
LOAD
CLK
SEG_A
H1
H2
U1
9-ST-20
Seg_a
D8
Seg_g
D7
Seg_f
D6
Seg_e
D5
D4
Seg_d
D3
DP
D2
Seg_c
D1
Seg_b
D0
L2
10uH
U6
TLV61046ADB
VI
SW
VOUT
EN
FB
R4
61.9k
R5
2.15k
C11
10u
C9
0.1u
+BATT
U5
MAX4719EUB+
V+
NO1
COM1
IN1
NC1
NO2
COM2
IN2
NC2
R2
18
R3
18
L1
4.7uH
U4
TPS613221ADBV
C4
0.1u
C6
22u
J2
Conn_01x02
J1
Conn_01x05
R1
330
C1
1u
D2
D_Schottky
D1
D_Schottky
C5
1u
Tc = 0.3mSec
R4 < 80kOhm to make IR2 > 100 FB pin leakage.
Vfb = 795mV
R4 = (Vout/Vfb-1)R5 = 29.2R5.
= 28.8*2.15
= 61.9
Sheet: /
File: EL-210-MOD.kicad_sch
Title: Akashi-10
Size: A4
Date: 2022-06-07
Rev: 1.0
KiCad E.D.A. kicad 6.0.2+dfsg-1
Id: 1/1