Design Process Planning and Management

LAB EX-07: Turning-Threading

Dr. K. Anandavel
Anandavel.k@vit.ac.in
anandavelvit@gmail.com

Room: 313-A43, SJT

Name: SUJAL SRIVASTAVA
Reg. no.: 20BME0699

EX07: Turning-Threading

Target Date: 11.59 PM on 9 Mar.

AIM

Develop a process and tool plan, generate tool path and part programming for Turning-Threading operations, and process set up sheet for the given job shown in the fig.1.

Tool: Fusion 360

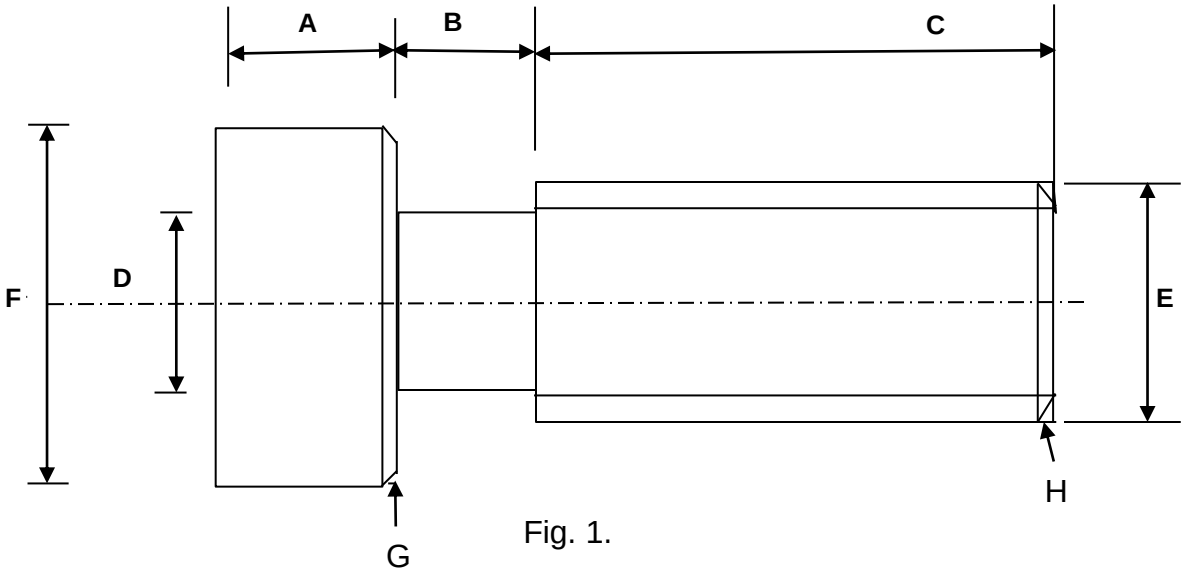

Fig. 1.

Para meter	Details	Remarks
A	12 mm	-
B	8 mm	-
C	60 mm	-
D	8 mm	Dia
E	M 12 x 1.5 mm pitch X 1.5 mm depth	Threading
F	20	Dia
G, H	1.5 mm x 1.5 mm x 45	Chamfer

Please email to anandavel.k@vit.ac.in for any clarification or missing data or suggestion

EX07: Turning-Threading

Material given:
MS Bar 24 mm diameter

Procedure

1. Create geometric model of finished size (Fusion 360) to the given dimensions in Fig.1
2. Save model EX06_ Roll No_GM
3. Study the model and material given and identify the sequence of operation and fill in Table 1.
4. Identify the required tools and its size. Fill it in Table 1
5. Enter into Manufacture model in Fusion 360
6. Complete the manufacturing setup
7. Define each of the identified process in sequence with the required tools, and machining parameters
8. Simulate and visualize the each of the process to ensure the correct process, tools and other parameters defined properly to carryout the each operation without any warning and error. Also optimise the tool path.
9. Save the model with EX06_ Roll No_MM
10. Post process and get the NC codes individually for all the operations (with programme numbers like 1001, 2001, 3001, ….) and one consolidation of all operations (Programme number 10001)
11. Generate the Setup sheet, to give an overview of NC program to the operator.
12. Save the manufacturing model
13. Complete the experiment report
14. Upload the report programme files and set up sheet in FUSION 360- in your folder under EX07
15. Keep all the files safely to upload the same in VTOP when you receive communication later for upload

EX07: Turning-Threading

Table 1: Process and Tool Plan —

Process Sequence No.	Process Name	Tool	Tool Details	Part programming file Number
1	Profile roughing	VNMT09T302-DVLN-L	0.2 mm	2001
2	Threading	OD Threading	0 mm	2001
3	Profile Finishing	VNMT09T302-DVLN-R	0.2 mm	2001

EX07: Turning-Threading

Fig. 1: Tool Path for Operation 1:____Profile Roughing____

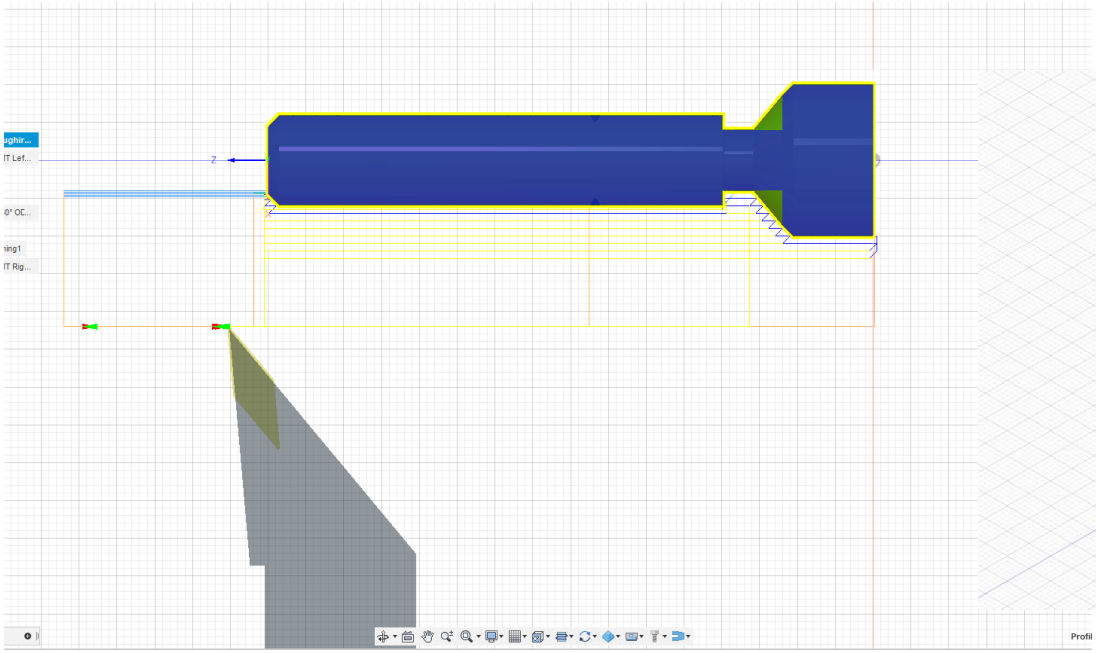

View 1

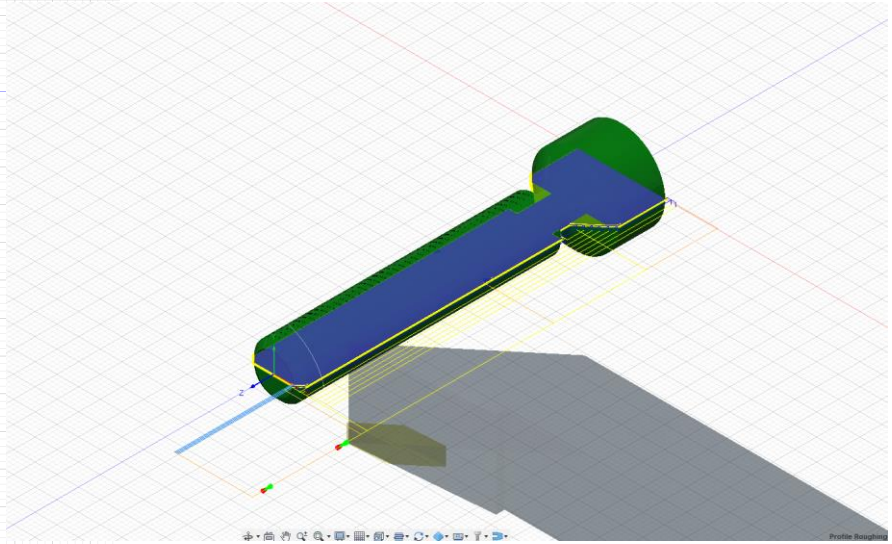

View 2

EX07: Turning-Threading

Fig. 2: Tool Path for Operation 2_____Threading_____

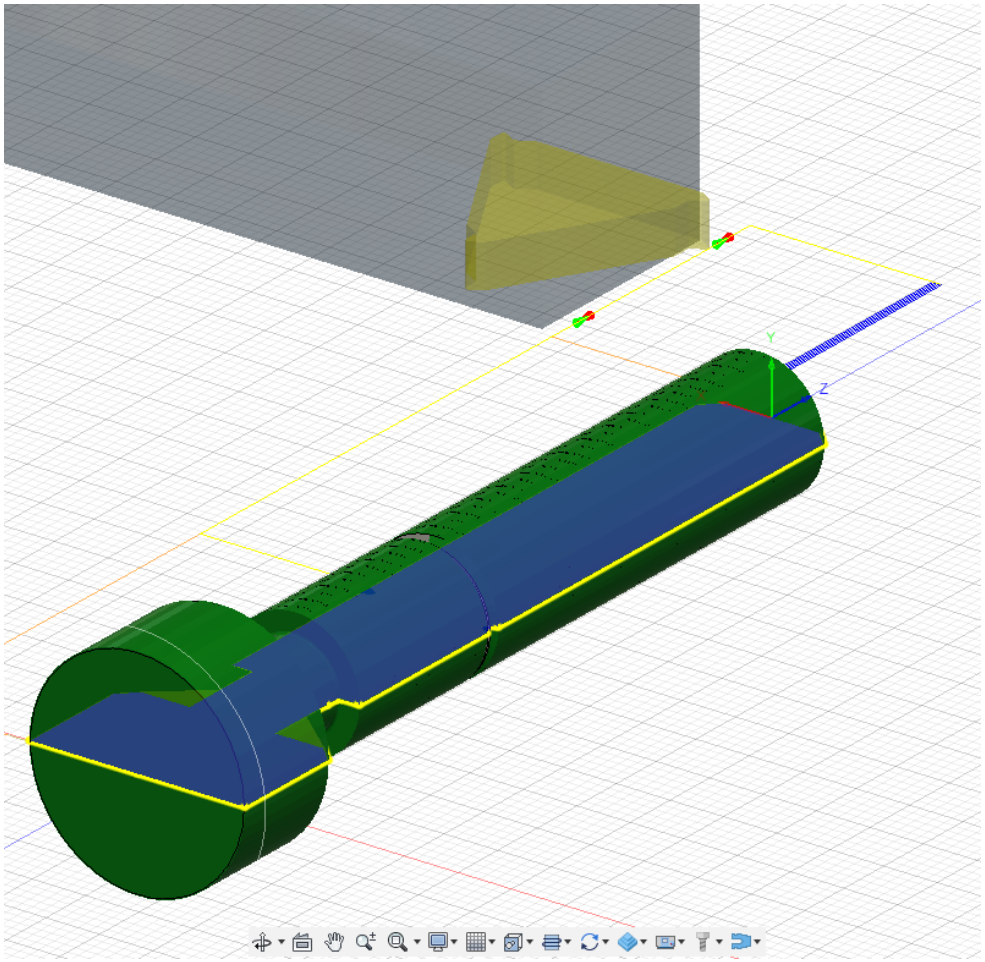

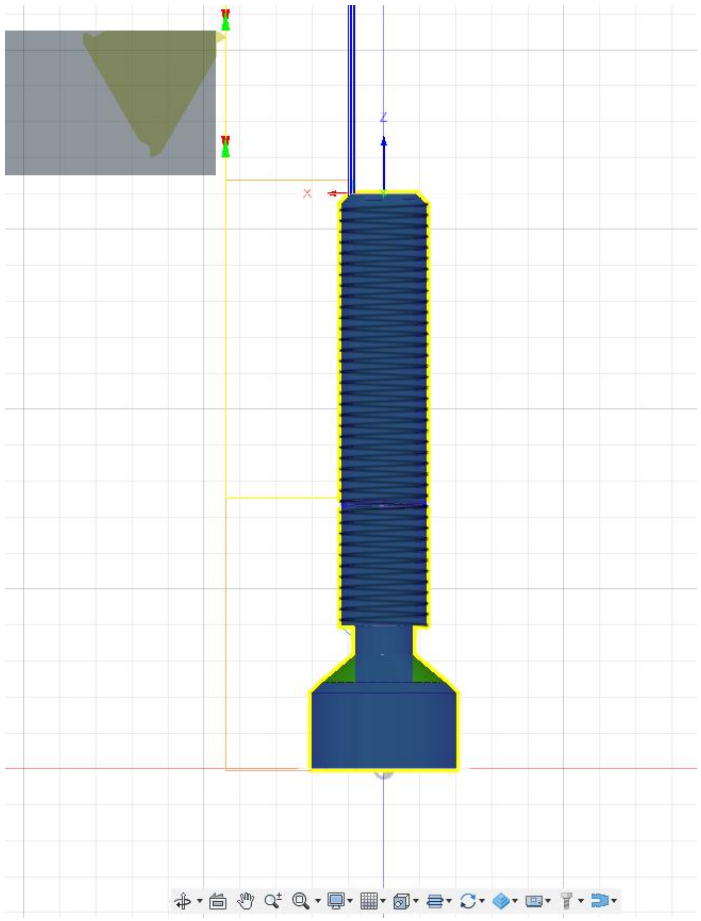

Fig. N: Tool Path for Operation 3: Profile Finishing -

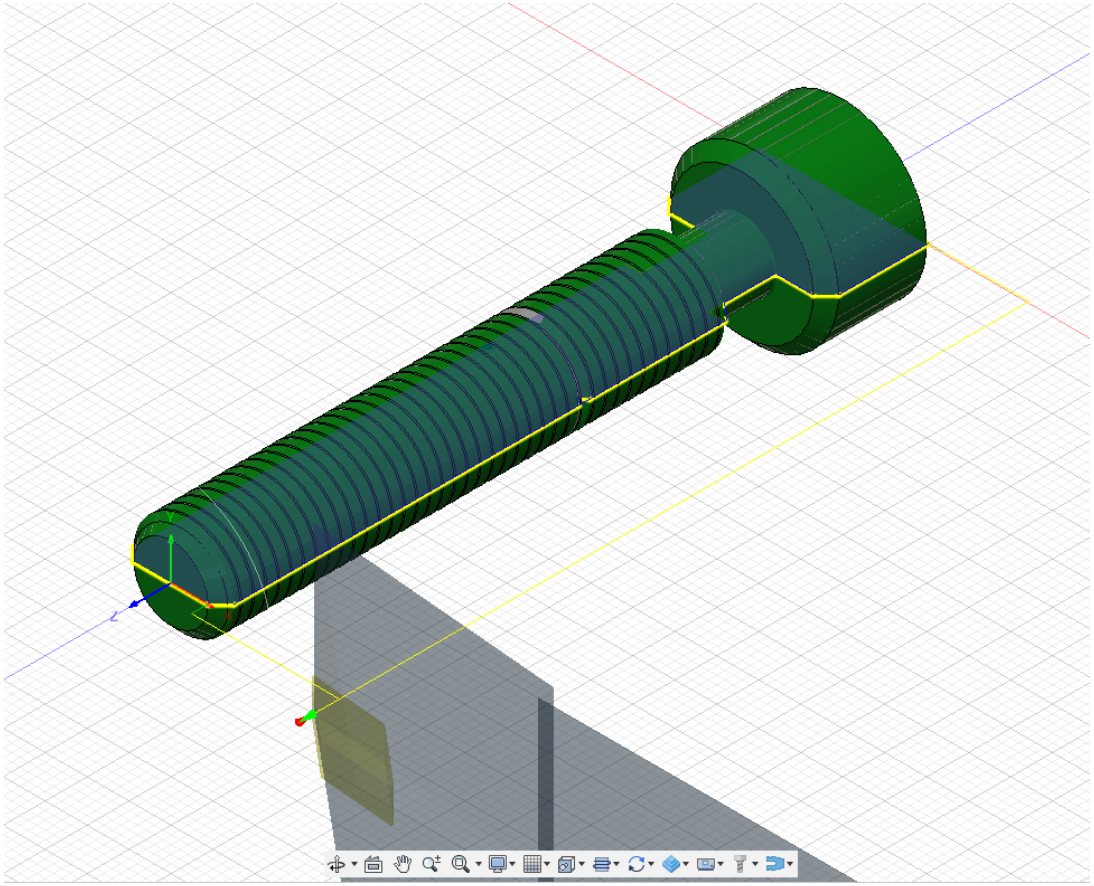

View 1

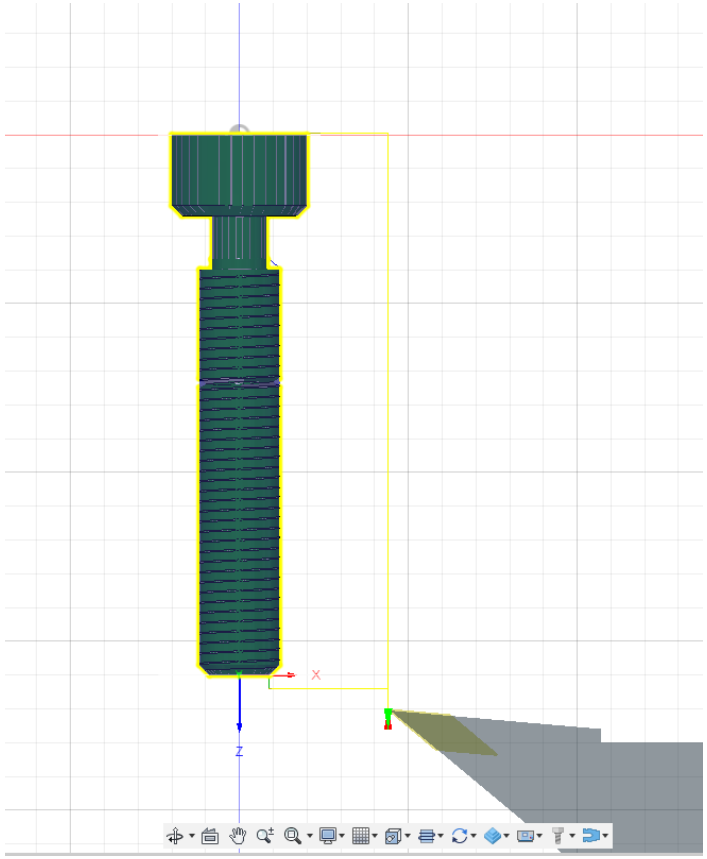

View 2

EX07: Turning-Threading

Inference and Conclusion

1. a) Machining time for operation 1, Profile Roughing is 00:24
   b) Machining distance for operation 1, Profile Roughing is 1.088 m.

2. a) Machining time for operation 2, Threading is 00:16
   b) Machining distance for operation 2, Threading is 0.867 m.

3. a) Machining time for operation 3, Profile Finishing is 00:16
   b) Machining distance for operation 3, Profile Finishing is 0.207 m.

Total machining time is 00:56
Total machining distance is 2.162 m

NC Code for all the operations :

2001.nc

C: > Users > USER > Documents > Fusion 360 > N

```
%
(2001)
N10 G90 G94 G18
N11 G21
N12 G28 U0.
N13 G28 W0.

(PROFILE ROUGHING1)
N14 T0101
N15 G90 G95 G18
N16 G54
N17 M8
N18 G97 S1447 M3
N19 G0 X44. Z5.4
N20 M48 S4000
N21 G96 S200 M3
N22 G0 Z0.5
N23 X22.
N24 G1 Z-80.5 F1.
N25 X24.
N26 X26. Z-79.5
N27 G0 Z0.5
N28 X20.
N29 G1 Z-69.076 F1.
N30 X20.2 Z-69.176
N31 Z-80.5
N32 X22.
N33 X24. Z-79.5
N34 G0 Z0.5
```

2001.nc

C: > Users > USER > Documents > Fusion 360 >

```
N34 G0 Z0.5
N35 X18.
N36 G1 Z-68.076 F1.
N37 X20. Z-69.076
N38 X22. Z-68.076
N39 G0 Z0.5
N40 X16.
N41 G1 Z-67.157 F1.
N42 X17.006 Z-67.579
N43 X18. Z-68.076
N44 X20. Z-67.076
N45 G0 Z0.5
N46 X14.
N47 G1 Z-66.318 F1.
N48 X16. Z-67.157
N49 X18. Z-66.157
N50 G0 Z0.5
N51 X12.
N52 G1 Z-1.151 F1.
N53 X12.05 Z-1.176
N54 Z-60.1
N55 X12.
N56 Z-65.478
N57 X14. Z-66.318
N58 X16. Z-65.318
N59 G0 Z0.5
N60 X10.508
N61 G1 Z-0.405 F1.
N62 X12. Z-1.151
```

2001.nc

C: > Users > USER > Documents > Fusion 360 > N

```
N62 X12. Z-1.151
N63 X14. Z-0.151
N64 G0 Z0.5
N65 X9.016
N66 G1 Z0.341 F1.
N67 X10.508 Z-0.405
N68 X12.508 Z0.595
N69 G0 X13.05
N70 Z-60.6
N71 X13.
N72 G1 Z-60.1 F1.
N73 X10.1
N74 Z-64.681
N75 X12. Z-65.478
N76 X14. Z-64.478
N77 G0 Z-60.6
N78 X11.1
N79 G1 Z-60.1 F1.
N80 X8.2
N81 Z-63.884
N82 X10.1 Z-64.681
N83 X12.1 Z-63.681
N84 G0 X44.
N85 Z5.4
N86 G97 S1447 M3
N87 M9
N88 G28 U0.
N89 G28 W0.
```

C: > Users > USER > Documents > Fusion 360 > NC Programs

```
(THREAD1)
N90 M1
N91 T0202
N92 G90 G95 G18
N93 G54
N94 M8
N95 G97 S500 M3
N96 G0 X44. Z22.609
N97 G0 Z26.966
N98 X9.737
N99 G32 Z-42.191 F2.
N100 G32 X10.137 Z-42.391 F2.
N101 G0 X44.
N102 Z26.966
N103 X9.337
N104 G32 Z-41.991 F2.
N105 G32 X10.137 Z-42.391 F2.
N106 G0 X44.
N107 Z26.966
N108 X8.937
N109 G32 Z-41.791 F2.
N110 G32 X10.137 Z-42.391 F2.
N111 G0 X44.
N112 Z26.966
N113 X8.537
N114 G32 Z-41.591 F2.
N115 G32 X10.137 Z-42.391 F2.
N116 G0 X44.
N117 Z26.966
```

2001.nc

C: > Users > USER > Documents > Fusion 360 > NC Prog

```
N117 Z26.966
N118 X8.137
N119 G32 Z-41.391 F2.
N120 G32 X10.137 Z-42.391 F2.
N121 G0 X44.
N122 Z22.609
N123 M9
N124 G28 U0.
N125 G28 W0.

(PROFILE FINISHING1)
N126 M1
N127 T0606
N128 G90 G95 G18
N129 G54
N130 M8
N131 G97 S1447 M3
N132 G0 X44. Z5.
N133 M48 S4000
N134 G96 S200 M3
N135 G0 Z1.941
N136 X9.459
N137 G1 X8.733 F1.
N138 Z-0.059
N139 X11.85 Z-1.617
N140 Z-60.293
N141 X8. Z-61.909
N142 Z-68.
N143 X16.766
N144 X20. Z-69.617
```

2001.nc

C: > Users > USER > Documents > Fusion 360 > NC Pro

```
N128 G90 G95 G18
N129 G54
N130 M8
N131 G97 S1447 M3
N132 G0 X44. Z5.
N133 M48 S4000
N134 G96 S200 M3
N135 G0 Z1.941
N136 X9.459
N137 G1 X8.733 F1.
N138 Z-0.059
N139 X11.85 Z-1.617
N140 Z-60.293
N141 X8. Z-61.909
N142 Z-68.
N143 X16.766
N144 X20. Z-69.617
N145 Z-80.2
N146 X24.
N147 G0 X44.
N148 Z5.
N149 G97 S1447 M3

N150 M9
N151 G28 U0.
N152 G28 W0.
N153 M30
%
```