Design Process Planning and Management

LAB EX-06: Turning

Dr. K. Anandavel
Anandavel.k@vit.ac.in
anandavelvit@gmail.com

Room: 313-A43, SJT

Name: **SUJAL SRIVASTAVA**
Reg. No.: **20BME0699**

EX06: Turning

Target Date: 11.59 PM on 2nd March

AIM

Develop a process and tool plan, generate tool path and part programming for turning operations, and process set up sheet for the given job shown in the fig.1.

Tool: Fusion 360

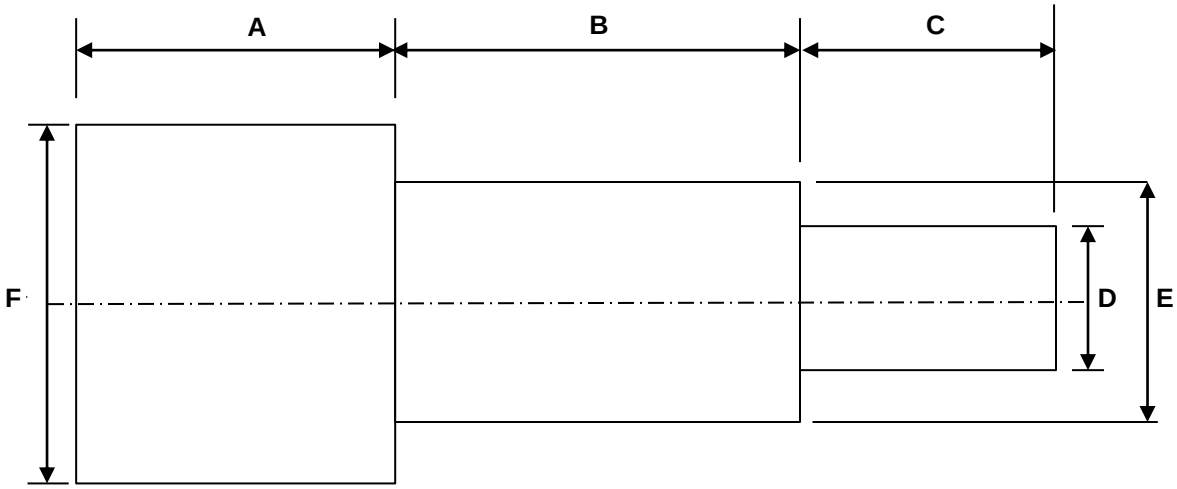

Fig. 1.

Para meter	Details	Remarks
A	40 mm	-
B	20 mm	-
C	20 mm	-
D	15 mm	Dia
E	25 mm	Dia
F	36 mm	Dia

Please email to anandavel.k@vit.ac.in for any clarification or missing data or suggestion

EX06: Turning

Material given:
MS Bar 40 mm diameter

Procedure

1. Create geometric model of finished size (Fusion 360) to the given dimensions in Fig.1
2. Save model EX06_ Roll No_GM
3. Study the model and material given and identify the sequence of operation and fill in Table 1.
4. Identify the required tools and its size. Fill it in Table 1
5. Enter into Manufacture model in Fusion 360
6. Complete the manufacturing setup
7. Define each of the identified process in sequence with the required tools, and machining parameters
8. Simulate and visualize the each of the process to ensure the correct process, tools and other parameters defined properly to carryout the each operation without any warning and error. Also optimise the tool path.
9. Save the model with EX06_ Roll No_MM
10. Post process and get the NC codes individually for all the operations (with programme numbers like 1001, 2001, 3001, ….) and one consolidation of all operations (Programme number 10001)
11. Generate the Setup sheet, to give an overview of NC program to the operator.
12. Save the manufacturing model
13. Complete the experiment report
14. Upload the report programme files and set up sheet in FUSION 360- in your folder under EX06
15. Keep all the files safely to upload the same in VTOP when you receive communication later for upload

EX06: Turning

Table 1: Process and Tool Plan

Process Sequence No.	Process Name	Tool	Tool Details	Part programming file Number
1	Facing	DCLN-R (CNMT Right Hand)	Radius – 0.8 Turning General	NC program 7
2	Profile roughing	DVLN-L (VNMT Left hand)	Radius – 0.2 Turning General	NC program 8
3	Profile Finishing	DVLN-R (VNMT Right hand)	Radius – 0.2 Turning General	NC program 9

EX06: Turning

Fig. 1: Tool Path for Operation 1: Facing

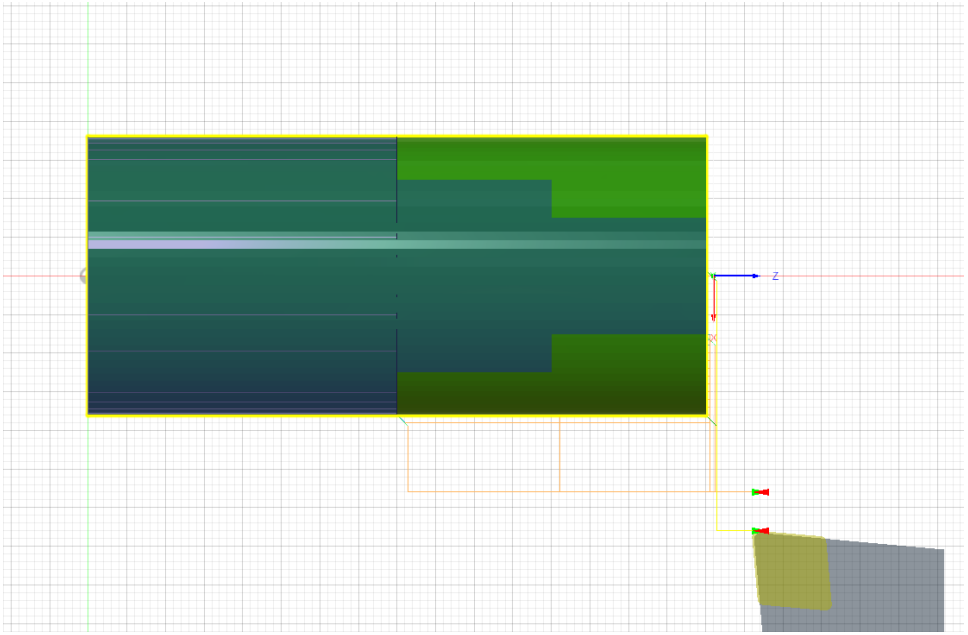

View 1

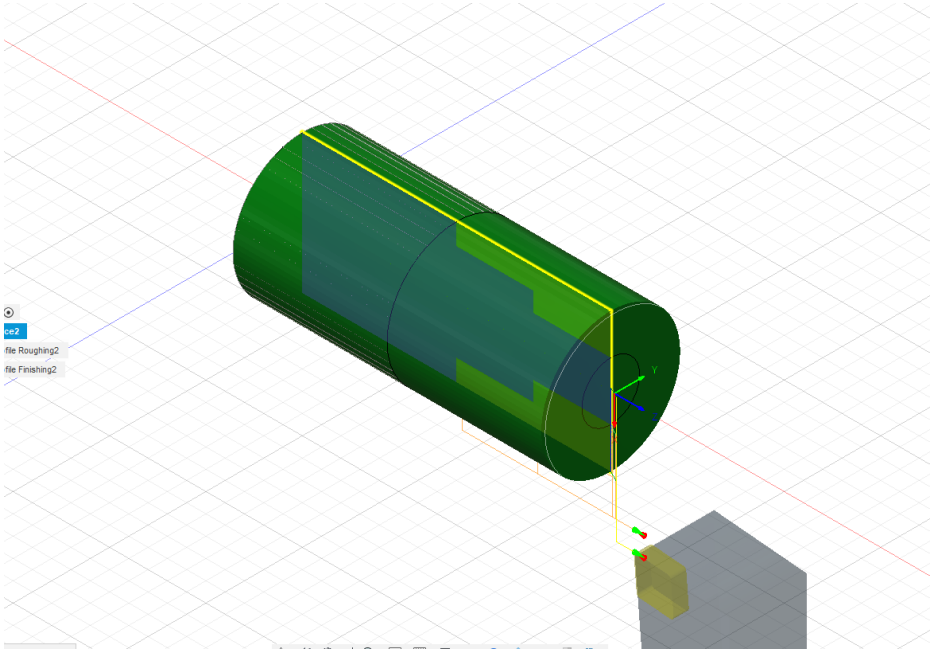

View 2

EX06: Turning

Fig. 2: Tool Path for Operation 2: Profile roughing

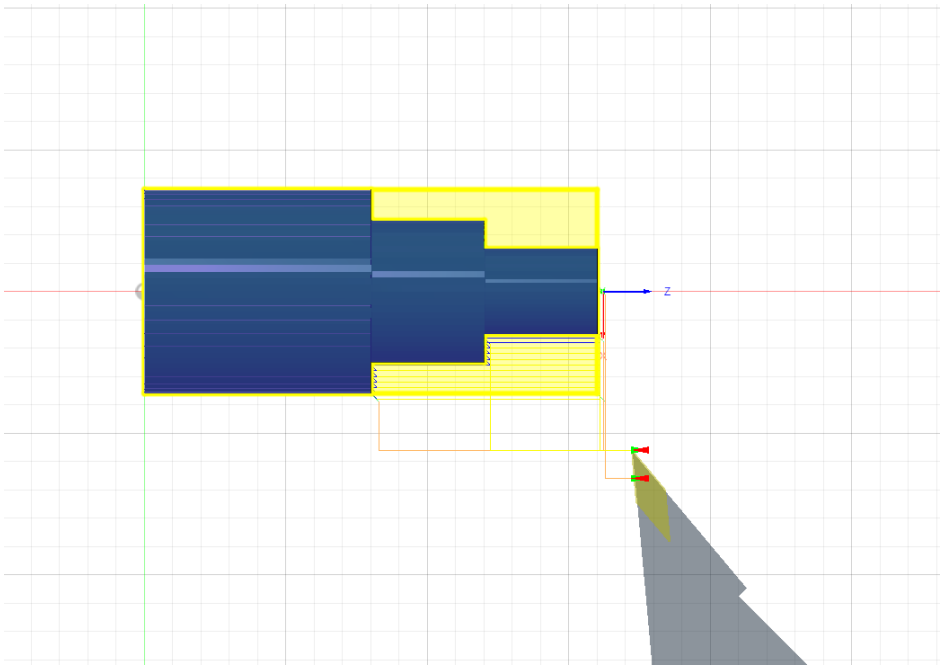

View 1

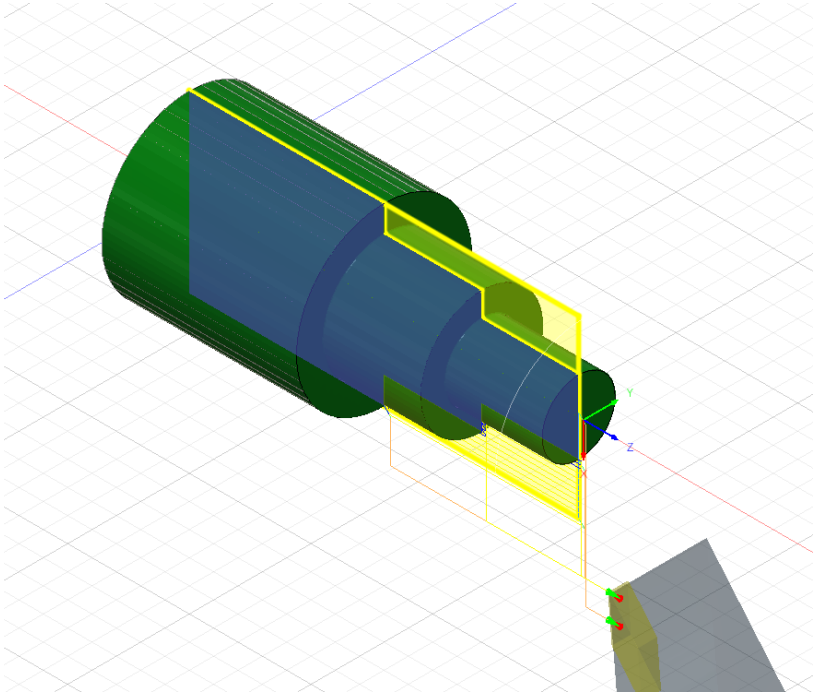

View 2

EX06: Turning

Fig. N: Tool Path for Operation 3: Profile Finishing

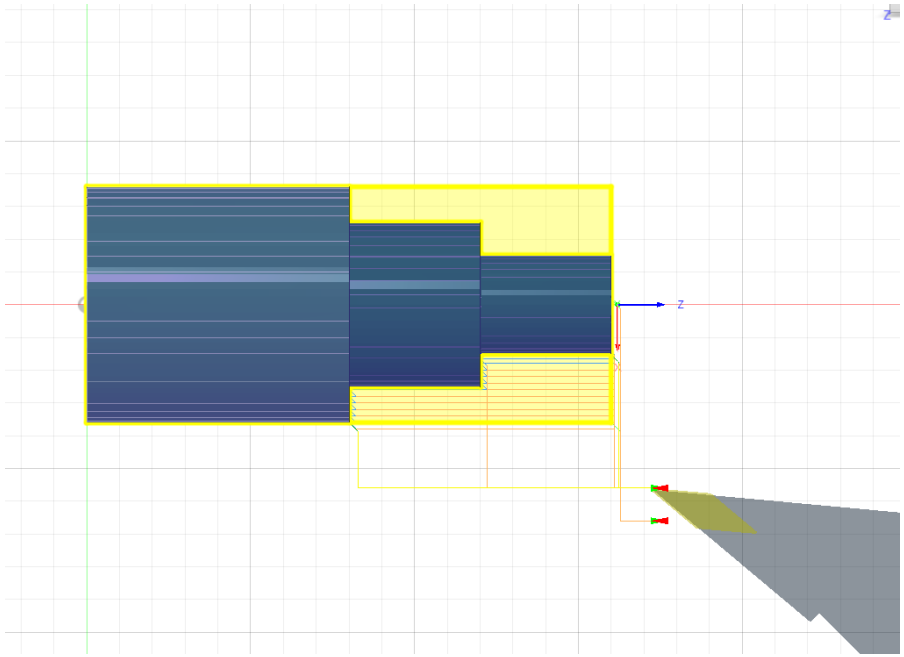

View 1

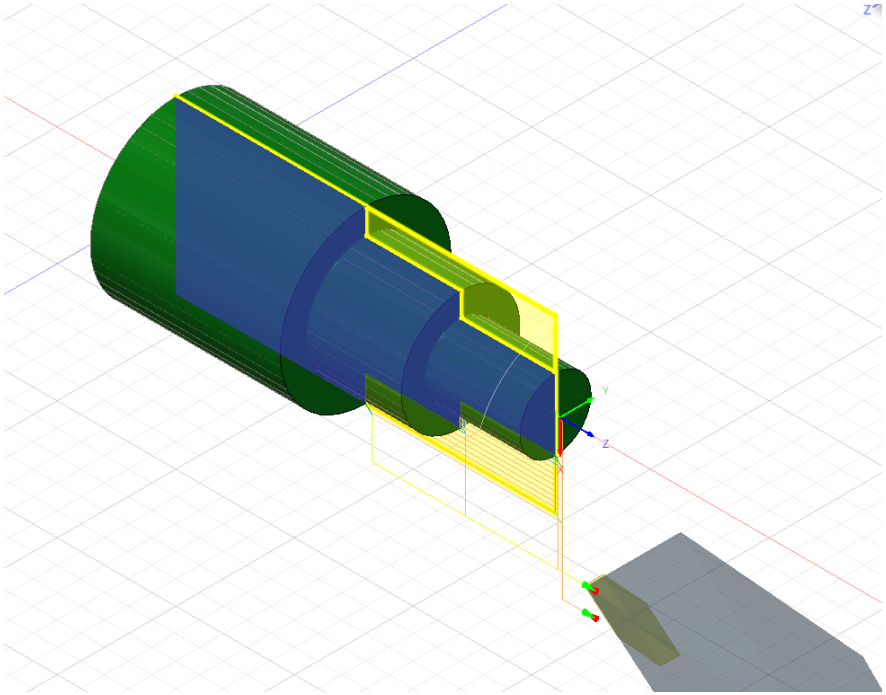

View 2

EX06: Turning

Inference and Conclusion

1. a) Machining time for operation 1 Facing is 00:15 sec.
   b) Machining distance for operation 1 Facing is 0.078 m.

2. a) Machining time for operation 1 Profile roughing is 00:24 sec.
   b) Machining distance for operation 1 Profile roughing is 0.774 m.

3. a) Machining time for operation 1 Profile finishing is 00:16 sec.
   b) Machining distance for operation 1 Profile finishing is 0.131 m.

Total machining time: 00:56 sec.
Total machining distance: 0.983 m

Repeat for individual operation , and one for all (total)operations