DIGITAL ASSIGNMENT-7

NAME: SUJAL SRIVASTAVA

REG NO: 20BME0699

AIM: To design a mouse using Free Form

Procedure :

1. Open a new design and click on Create Form option in the design window.
2. Click on Insert dropdown menu and select Canvas option. Now select Insert from my computer option and select the image you want.
3. Now select the XY plane and click OK from Canvas menu.

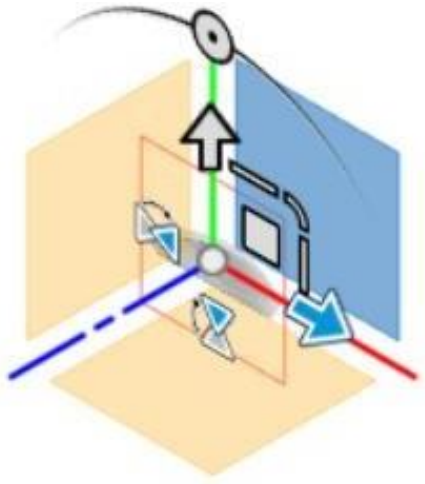

4. Now, select Calibrate option after right clicking on the image name as shown below.

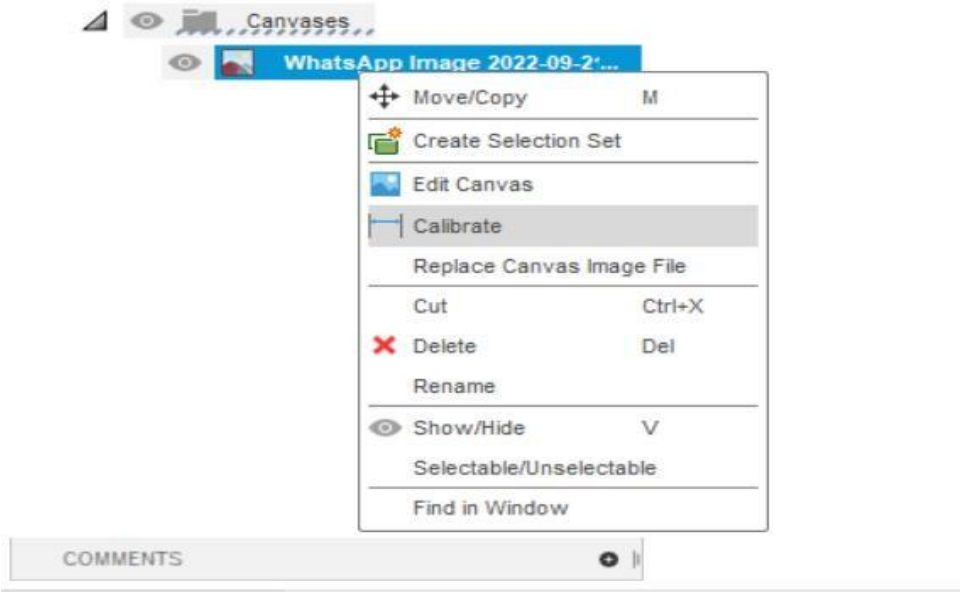

5. Select the starting and ending point of the mouse and enter the value as 100mm.

6. Again right click on the image name on the left side of the screen and select Move/Copy option. And move the figure such that thebase of the mouse aligns parallel and very close to the horizontal axis.

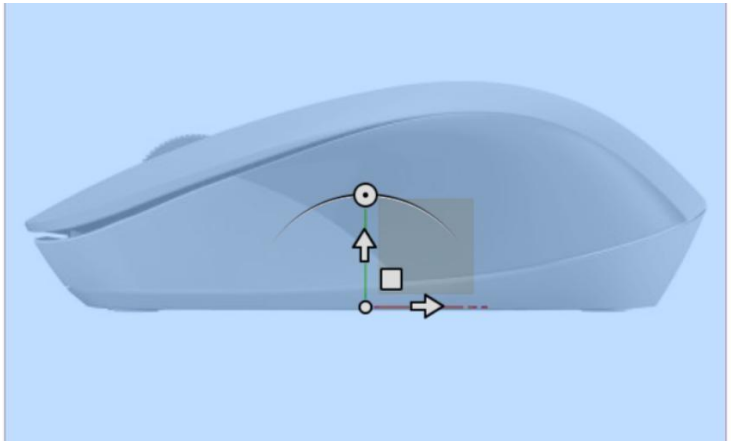

7. Choose Box option from Create dropdown and select the horizontal plane and origin of the figure. Then set the width of the box to50mm and length to 100mm and click OK.

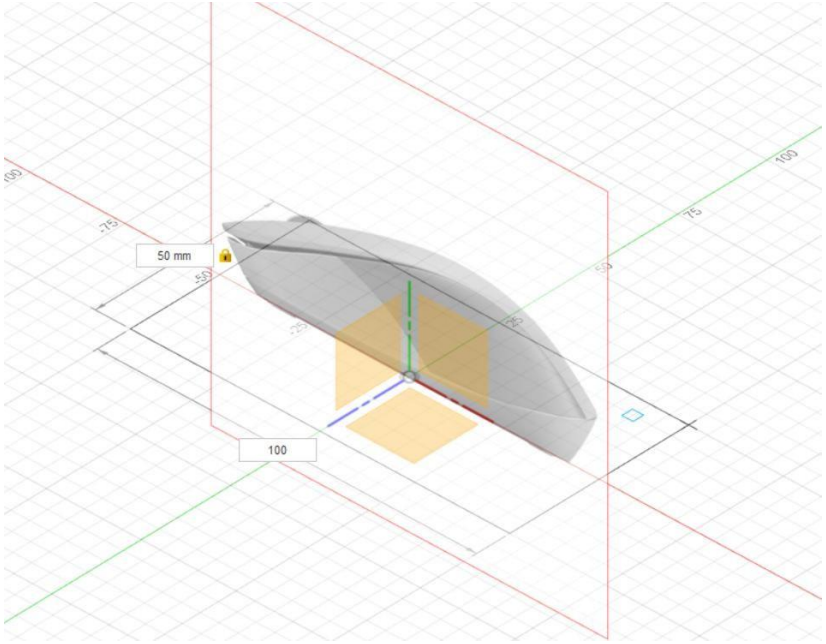

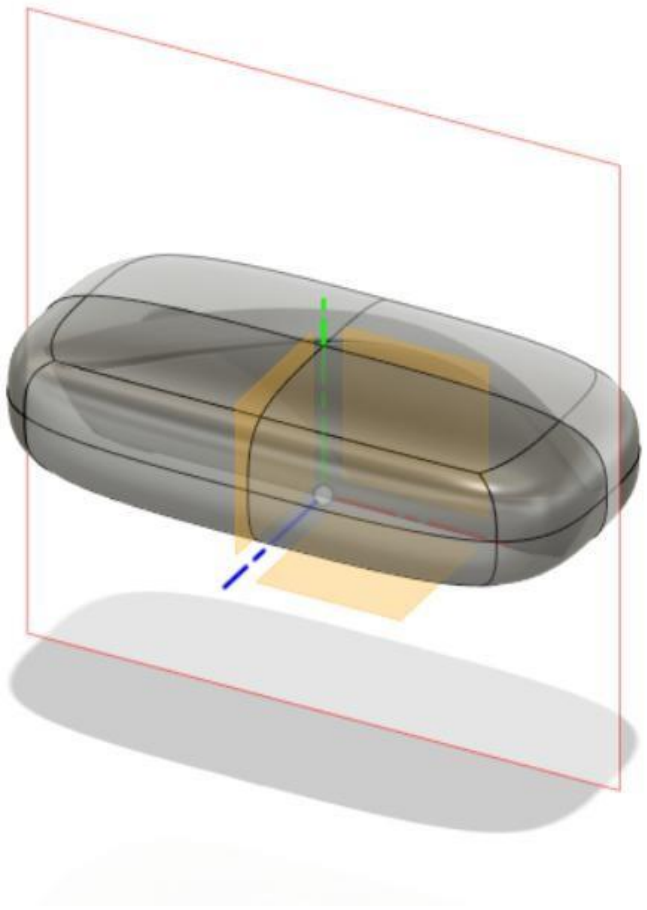

8. Select Mirror-Internal from Symmetry dropdown. Then proceed to select the following parts and click OK.

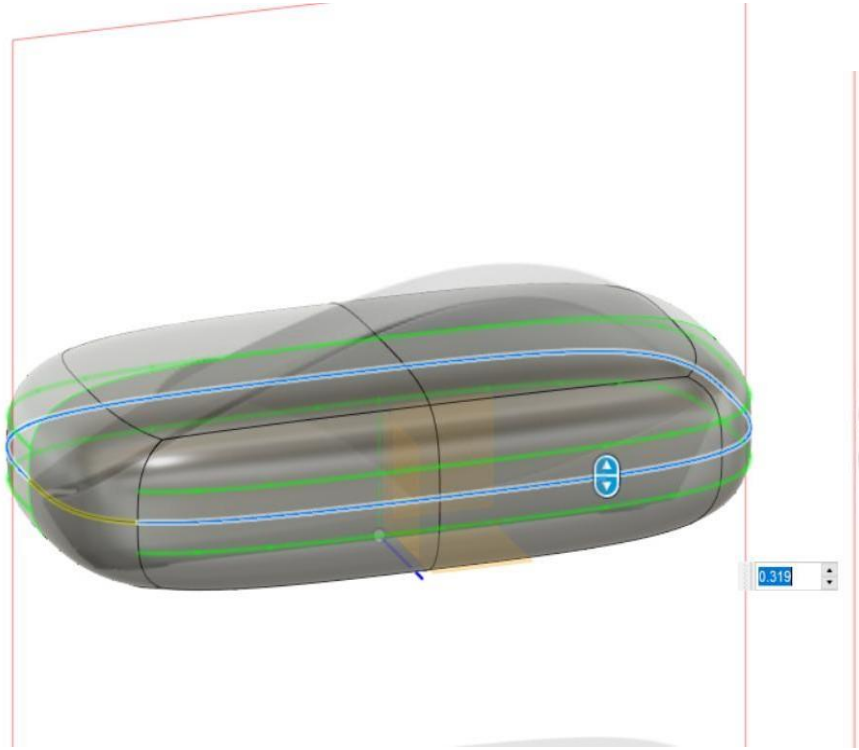

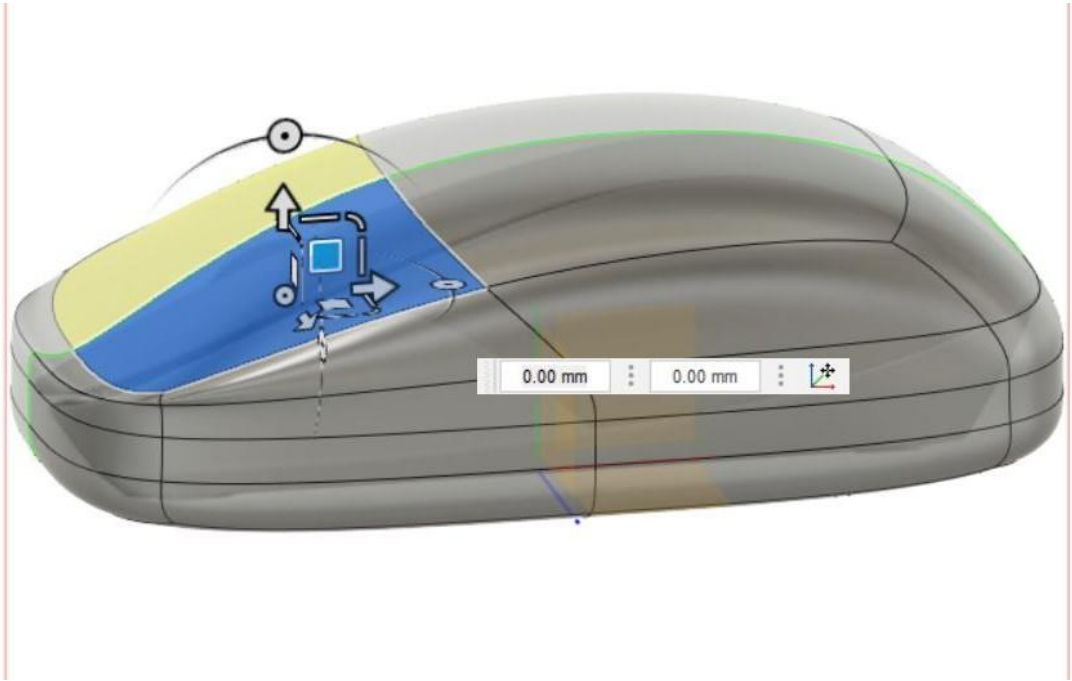

9. Now right click on the panels and select Edit form to give the box the shape of a mouse. Edges, points and faces all can be edited.

10. Click OK.

11. Now go to Sketch feature and again select the XY plane. Use Intersect option from Create dropdown, and select the upper edge ofthe mouse. Now, using a 3-Point Arc option draw the shape of the scrolling wheel. Select the sketch of the wheel and extrude it. Set Direction to Symmetric. Measurement to Whole Length. Give the distance as 5 mm and hit OK button.

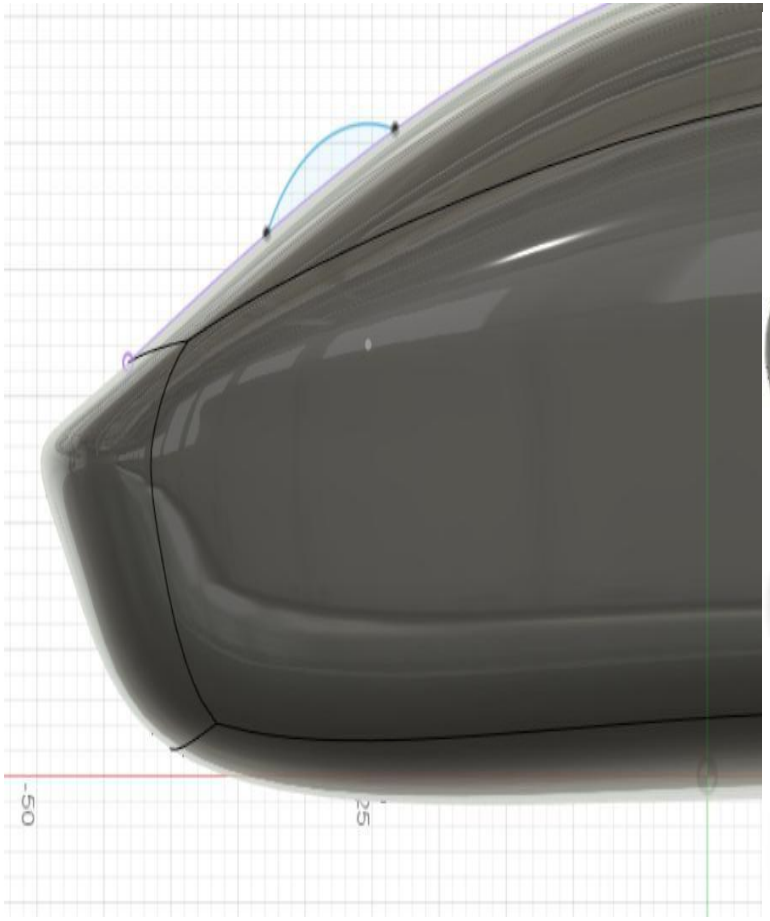

12. Now apply Fillet to the two edges of the scrolling wheel of 1 mm.

13. Now select the bottom surface of the mouse and draw a circle like shown below.

14. Extrude the circle drawn in step 14, to 1.5mm and select the Operation as Join.

15. Using the Rectangular Pattern option, construct 3 more circles from the one drawn in step 15. Click OK.

RESULT:

LINK:

https://a360.co/3SoGvjz