MODULE 1
DC Circuits

Syllabus:
DC Circuits: Ohms Law, Voltage division & Current division in DC circuits; Analysis of series, Parallel and series-parallel circuits excited by independent voltage sources; Power and Energy; Kirchhoff's Laws.

DC Circuits:

Ohm's Law

This law applies to electric conduction through good conductors. This law gives relationship between the voltage or potential difference (V), the current (I) and the resistance (R) of a circuit.

Statement of Ohm's Law:

"The voltage across a conductor is directly proportional to the current flowing through it, provided all physical conditions and temperature, remain constant". That is

$$V \propto I \text{ or } V = RI$$

Where R = constant of proportionality = resistance of the conductor. Its unit is ohm(Ω).

$$\text{Hence, } \frac{V}{I} = R$$

Limitations of Ohm's Law

The limitations of the Ohm's law are,

1. It is not applicable to the nonlinear devices such as diodes, Zener diodes, voltage regulators etc.
2. It does not hold good for non-metallic conductors such as silicon carbide.

Problems:

1. A resistance of 10 Ω is connected in series with two resistances each of 15 Ω arranged in parallel. What resistance must be shunted across this parallel combination so that the total current taken shall be 1.5 A with 20 V applied?

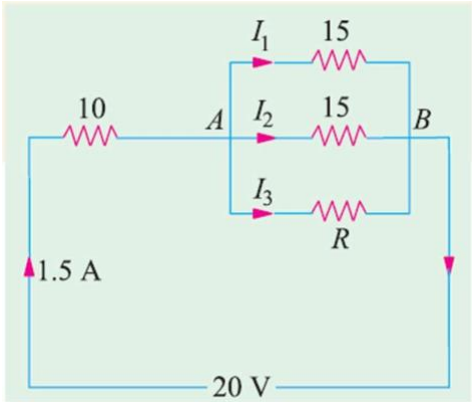

Drop across 10-Ω resistor = 1.5 × 10 = 15 V
Drop across parallel combination, VAB = 20 − 15 = 5 V
Hence, voltage across each parallel resistance is 5 V.
I1 = 5/15 = 1/3 A, I2 = 5/15 = 1/3 A
I3 = 1.5 − (1/3 + 1/3) = 5/6 A
∴ I3 R = 5 or (5/6) R = 5 or R = 6 Ω

2. A Battery has an emf of 12.8 volts and supplies a current of 3.24 A. What is the resistance of the circuit?
   Sol: Circuit Resistance, R = V/I = 12.8/3.24 = 4 Ω.

Series Circuit

A series circuit is one in which several resistances are connected one after the other. Such connection is also called end to end connection or cascade connection. There is only one path for the flow of current.

Consider the resistances shown in the Fig. 2.1

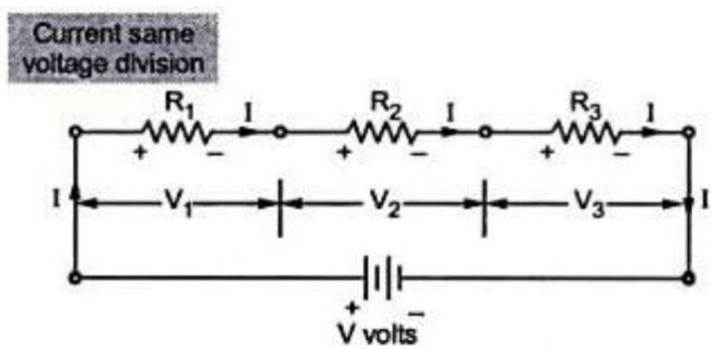

Fig 2.1 Series circuit

The resistance R_1, R_2 and R_3 are said to be in series. The combination is connected across a source of voltage V volts. Naturally the current flowing through all of them is same indicated as I amperes. Ex: the chain of small lights, used for the decoration is good example of series combination.
Let V_1, V_2 and V_3 be the voltages across the terminals of resistances R_1, R_2 and R_3 respectively.

Then, $V = V_1 + V_2 + V_3$

Where $V_1 = IR_1$, $V_2 = IR_2$, $V_3 = IR_3$ (from Ohm's law)
Current through all the resistors is the same, that is I
Therefore, $V = IR_1 + IR_2 + IR_3 = I(R_1 + R_2 + R_3)$ ------ *Eqn 1*

Applying Ohm's law to the overall circuit

$V = I R_{eq}$ --------*Eqn 2*

Where Req = equivalent resistance of the circuit.
By comparing *Eqn 1* and *Eqn 2*

$$R_{eq} = R_1 + R_2 + R_3$$

The total or equivalent resistance of series circuit is the arithmetic sum of resistance connected in series.

Characteristics of Series Circuits

- The same current flows through each resistance.
- The equivalent resistance is equal to the sum of the individual resistances
- The voltage drop across each resistor will be different.
- The supply voltage V is the sum of the individual voltage drops across the resistances.
  $V = V_1+V_2+..... +V_n$

Parallel Circuit

The parallel circuit is one in which several resistances are connected across one another in such a way that one terminal of each is connected to form a junction point while the remaining ends are also joined to form another junction point.
Consider a parallel circuit shown in the Fig. 2.2 below

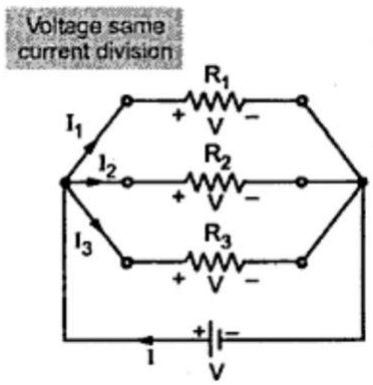

Fig 2.2 Parallel circuit

In the circuit shown above, the three resistances R_1, R_2 and R_3 are connected in parallel and combination is connected across a source of voltage 'V'.
Let total current drawn is say 'I' as shown.
There are 3 paths for this current (through R_1, R_2 and R_3).
I_1 = Current through R_1
I_2= Current through R_2
I_3= Current through R_3
Voltage drop across each resistor is the same and equals to the supply voltage V.

By applying Ohm's law to each resistance we get,

$$I_1 = \frac{V}{R1} \qquad I_2 = \frac{V}{R2} \qquad I_3 = \frac{V}{R3}$$

$$I = I_1 + I_2 + I_3 = \frac{V}{R1} + \frac{V}{R2} + \frac{V}{R3}$$

$$I = V\left(\frac{1}{R1} + \frac{1}{R2} + \frac{1}{R3}\right) \text{-------} \textit{Eqn 1}$$

For the overall circuit if ohm`s law is applied,

$$V = I\,Req$$

Where Req = equivalent resistance of the circuit.

So, $$I = \frac{V}{Req} \text{ ----- } Eqn\ 2$$

By comparing *Eqn 1* and *Eqn 2*

$$\frac{1}{Req} = \frac{1}{R1} + \frac{1}{R2} + \frac{1}{R3}$$

In general, if **n** resistors are connected in parallel,

$$\frac{1}{Req} = \frac{1}{R1} + \frac{1}{R2} + \frac{1}{R3} + \ldots\ldots + \frac{1}{Rn}$$

Now if **n=2**, two resistance are in parallel, then,

$$\frac{1}{Req} = \frac{1}{R_1} + \frac{1}{R_2}$$

$$R_{eq} = \frac{R1R2}{R1 + R2}$$

Characteristics of Parallel Circuits

- The potential difference across each resistor is the same.
- The current through each resistor is different.
- The total current is always sum of all the branch currents. $I = I_1 + I_2 + I_3 + \ldots + I_n$.
- Resistance of the circuit is $\frac{1}{Req} = \frac{1}{R1} + \frac{1}{R2} + \frac{1}{R3} + \ldots\ldots + \frac{1}{Rn}$.

Voltage Division in Series Circuit of Resistors

Consider a series circuit of two resistors R_1 and R_2 connected to source of V volts (Fig. 2.3). As two resistors are connected in series, the current flowing through both the resistors is same, i.e. I.

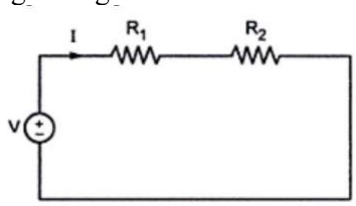

Fig 2.3 Voltage divider circuit

Then applying KVL, we get, $\mathbf{V = IR_1 + IR_2}$

$$I = \frac{V}{(R1 + R2)}$$

Let V_{R1} = Voltage drop across R1
V_{R2} = Voltage drop across R2
Therefore, $\mathbf{V_{R1} = IR_1}$

$$V_{R1} = \frac{V}{R_1 + R_2} \cdot R_1 = \left[\frac{R_1}{R_1 + R_2}\right] V$$

Similarly, $V_{R2} = IR_2$

$$V_{R2} = \frac{V}{R_1 + R_2} \cdot R_2 = \left[\frac{R_2}{R_1 + R_2}\right] V$$

So, in general, voltage drop across any resistors or combination of resistors in a series circuit is equal to the ratio of that resistance value, to the total resistance multiplied by the source voltage.

Current Division in Parallel Circuit of Resistors

Consider a parallel circuit of two resistors R_1 and R_2 connected across a source of V volts (Fig. 2.4). Current through R_1 is I_1 and R_2 is I_2, while total current drawn from source is I_T.

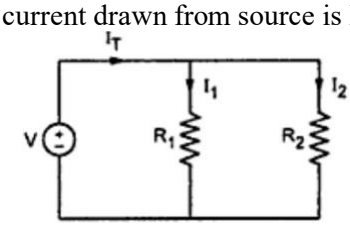

Fig 2.4 Current division circuit

By KCL, we get, $I_T = I1 + I2$

But $I_1 = \frac{V_1}{R_1}$ & $I_2 = \frac{V_2}{R_2}$

and $V = I_1R_1 = I_2R_2$

$$\text{Hence, } I_T = I_2 \left(\frac{R_2}{R_1}\right)$$

Substituting the value of $I1$ in I_T

$$I_T = I_2 \left(\frac{R2}{R1}\right) + I_2 = I_2\left[\left(\frac{R_2}{R_1}\right) + 1\right] = I_2 \left(\frac{R_2+R_1}{R_1}\right)$$

$$I_2 = I_T \left(\frac{R_1}{R_1 + R_2}\right)$$

Now, $I_1 = I_T - I_2 = I_T - I_T \left(\frac{R_1}{R_1 + R_2}\right)$

$$I_1 = I_T \left(\frac{R_1 + R_2 - R_1}{R_1 + R_2}\right)$$

$$I_1 = I_T \left(\frac{R_2}{R_1 + R_2}\right)$$

In general, the current in any branch is equal to the ratio of opposite branch resistance to the total resistance value, multiplied by the total current in the circuit.

Problem:

1. Three resistors 30 Ω, 25 Ω, 45 Ω are connected in series across 200V. Calculate (i) Total resistance (ii) Current (iii) Potential difference across each element.

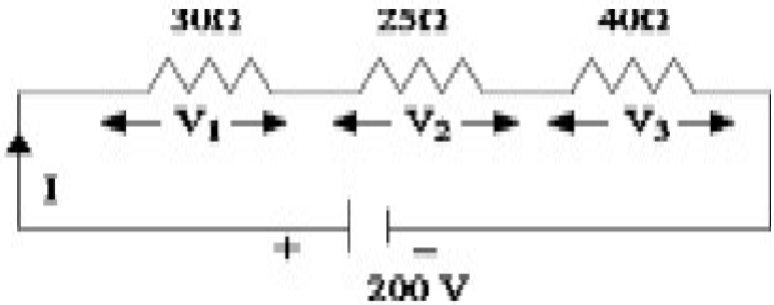

(i) Total Resistance (R_T)

$$R_T = R_1 + R_2 + R_3$$
$$R_T = 30 + 25 + 45 = 100\ \Omega$$

(ii) Current, $I = \frac{V}{R_T} = \frac{200}{100} = 2\ A$

(iii) Potential difference across each element,

$$V_1 = IR_1 = 2 * 30 = 60\ V$$
$$V_2 = IR_2 = 2 * 25 = 50\ V$$
$$V_3 = IR_3 = 2 * 45 = 90\ V$$

2. Find the value of 'R' in the circuit diagram, given below.

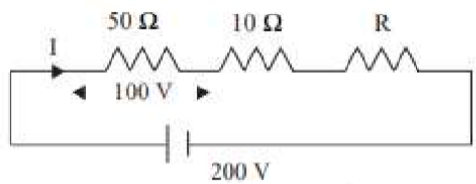

We know that, $V_1 = IR_1$

$I = V_1 / R_1 = 100/50 = 2$ A

Similarly, $V_2 = IR_2 = 2 * 10 = 20\ V$

Total voltage drop, $V = V_1 + V_2 + V_3$

$$V_3 = V - (V_1 + V_2) = 200 - (100 + 20)$$
$$V_3 = 80\ V$$
$$V_3 = IR_3,\ R_3 = V_3 / I = 80/2 = 40\ \Omega$$
$$\therefore R_3 = 40\ \Omega$$

Power (P): Power in a DC circuit is the rate at which electrical energy is transferred or converted within the circuit. It is the amount of work done or energy consumed (or produced) per unit of time. Mathematically, power in a DC circuit is calculated using Ohm's Law:

$$P = VI$$

Where:

P is the power in watts (W)
V is the voltage in volts (V)
I is the current in amperes (A)

This equation demonstrates that power is directly proportional to both voltage and current in a DC circuit.

Energy (E): Energy in a DC circuit is the capacity to do work or the total amount of electrical potential and kinetic energy stored or used in the circuit. It represents the cumulative power consumed or produced over a specific period. The energy consumed or produced in a DC circuit is calculated using the following equation:

$$E=Pt$$

Where:
E is the energy in watt-hours (Wh) or joules (J)
P is the power in watts (W)
t is the time in hours (h) for watt-hours or seconds (s) for joules.

This equation illustrates that energy is the product of power and time.
In summary, power represents the rate of energy transfer or conversion in a DC circuit, while energy is the total amount of work done or consumed over a given time.

Kirchhoff's Current Law or Point Law (KCL)

It states as follows:

"The algebraic sum of all currents entering and leaving a node must equal to zero"
In other words, the total current leaving a junction is equal to the total current entering that junction.
Consider the case of a few conductors meeting at a point A as in Fig. 2.5 below

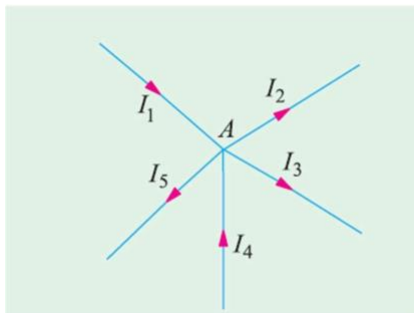

Fig. 2.5 Illustration of KCL

Some currents are moving towards point A, whereas some currents are moving away from point A. Assuming the incoming currents to be positive and the outgoing currents negative, we have

$$I_1 - I_2 - I_3 + I_4 - I_5 = 0$$

$$\text{or } I_1 + I_4 - I_2 - I_3 - I_5 = 0 \text{ or } I_1 + I_4 = I_2 + I_3 + I_5$$

or sum of incoming currents = sum of outgoing currents

Kirchhoff's Voltage Law or Mesh Law (KVL)

It states as follows:

"The algebraic sum of all voltage drops around any closed loop is zero."

In other words, $\Sigma\, IR + \Sigma\, e.m.f. = 0$ ...round a mesh

It should be noted that algebraic sum is the sum which takes into account the polarities of the voltage drops.

Sign conventions to be followed while applying KVL:

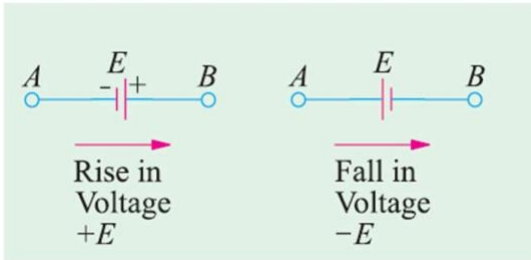

If we move from negative terminal to the positive terminal of the battery, there is a rise in potential and it is represented by a + sign

If we move from positive terminal to the negative terminal of the battery, there is a fall in potential and it is represented by a – sign

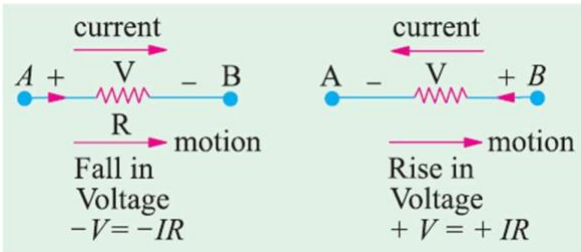

If we go through a resistor in the same direction as the current, then there is a fall in potential because current flows from a higher to a lower potential. Hence, this voltage fall should be taken negative.

However, if we go in a direction opposite to that of the current, then there is a rise in voltage. Hence, this voltage rise should be given a positive sign.

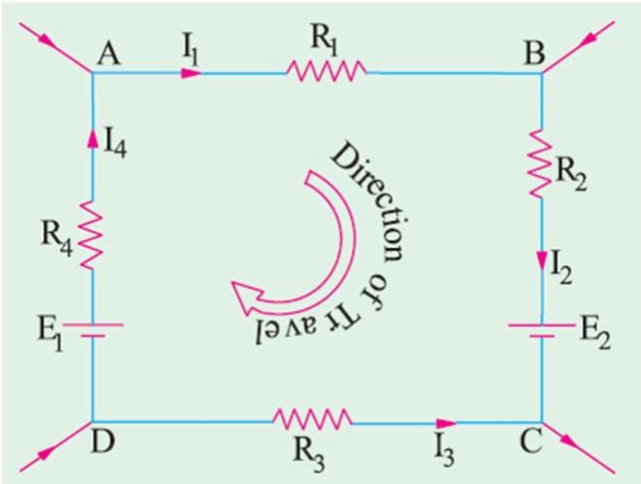

I_1R_1 is − ve (fall in potential)

I_2R_2 is − ve (fall in potential)

I_3R_3 is + ve (rise in potential)

I_4R_4 is − ve (fall in potential)

E_2 is − ve (fall in potential)

E_1 is + ve (rise in potential)

Using Kirchhoff's voltage law, we get

$-I_1R_1 - I_2R_2 + I_3R_3 - I_4R_4 - E_2 + E_1 = 0$

or $\boldsymbol{I_1R_1 + I_2R_2 - I_3R_3 + I_4R_4 = E_1 - E_2}$

EXERCISE PROBLEMS:

1. Determine the voltage across each resistor in the following circuit shown in Fig. 1 using voltage division rule

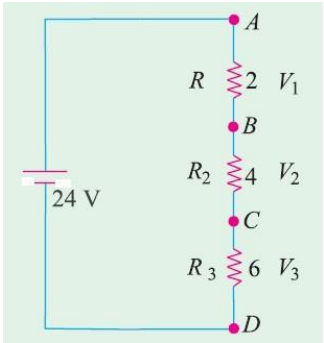

Fig. 1

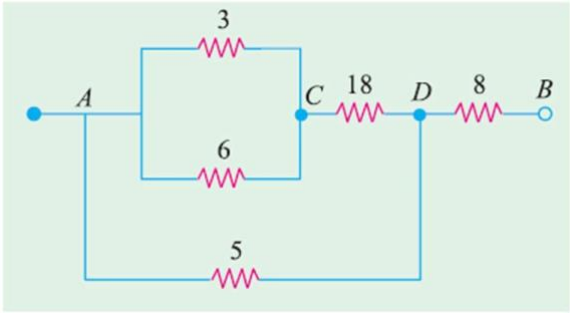

Fig. 2

2. Calculate the effective resistance and the voltage drop across each resistance when a P.D. of 60 V is applied between points A and B for the circuit shown in Fig. 2

3. A resistance of 10 Ω is connected in series with two resistances each of 15 Ω arranged in parallel. What resistance must be shunted across this parallel combination so that the total current taken shall be 1.5 A with 20 V applied?

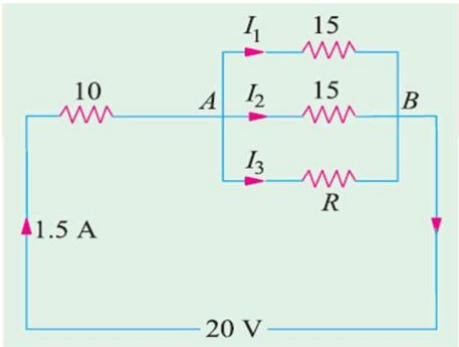

4. Find the current and voltage of each element of the circuit for the following given circuit parameter using Kirchhoff's voltage law.

$R_1 = 5\Omega R_2 = 10\Omega R_3 = 5\Omega R_4 = 10\Omega V = 20$Volts

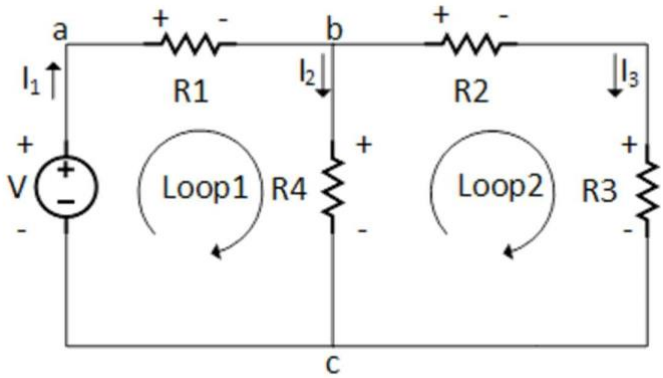

(Ans: I1=1.81A, I2=1.09A, I3=0.72A, VR1=9.05V, VR2=7.2V, VR3=3.6V, VR4=10.9V)

5. Determine currents I1, I2 and I3 in the circuit given below

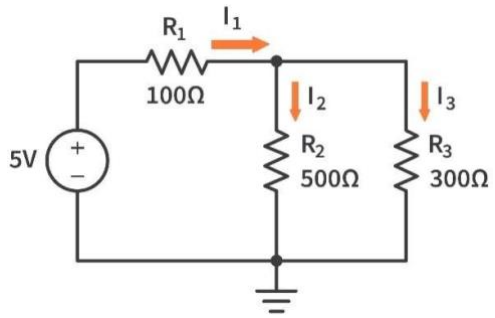

(Ans: I1=17.4mA, I2=6.52mA, I3=10.87mA)