UNIT I
ELECTRODES AND ENERGY SYSTEMS

Electrode System

An electrochemical cell is a device that converts chemical energy into electrical energy or electrical energy into chemical energy. Thus, there can be two types of electrochemical cells.

(i) Electrolytic cells are devices that convert electrical energy into chemical energy.

(ii) Galvanic cells (or voltaic cells) are devices that convert chemical energy into electrical energy. E.g. Daniel cell (Fig.1): The Daniel cell consists of two containers, one of them contains a zinc rod dipped in zinc sulfate solution and the other is with a copper rod dipped in a copper sulphate solution. The solutions of two containers are connected by a salt bridge. The zinc and copper rods (electrodes) are connected externally through an ammeter by using a wire, the following changes are observed:

- Zinc starts to dissolve.
- Copper gets deposited on a copper rod.
- The ammeter indicates the flow of electrons from zinc to the copper rod.
- The zinc sulfate solution becomes richer with Zn^{2+} ions.
- The copper sulfate solution becomes more dilute with respect to Cu^{2+} ions.

Anode (oxidation): $Zn \rightarrow Zn^{2+} + 2e^-$

Cathode (reduction): $Cu^{2+} + 2e^- \rightarrow Cu$

Net Cell reaction: $Zn + Cu^{2+} \rightarrow Zn^{2+} + Cu$

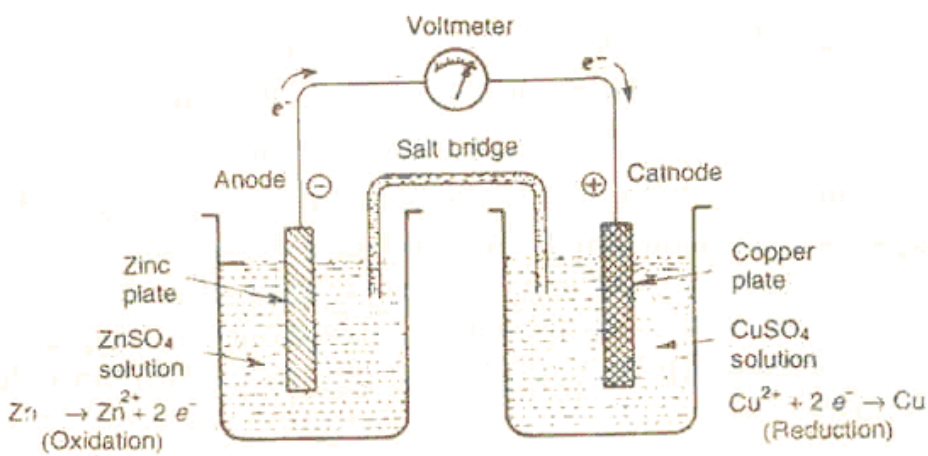

Fig.1. Daniel cell.

The flow of electrons from zinc electrode to copper electrode. Hence the flow of conventional current is from copper to zinc electrode.

Cell notation and convention:

By convention, the electrode at which oxidation occurs is the **anode** and the electrode where reduction occurs is the **cathode.** Thus, in the above cell zinc electrode acts as an anode. And copper electrode acts as a cathode. In a galvanic cell, anode is **negative** and the cathode is **positive.** The reason, for this, is that oxidation is accompanied by the liberation of electrons which are given up to that electrode, which thereby acquires a negative charge. Reduction, on the other hand, is accompanied by the absorption of electrons by the reactant in the solution from the electrode, which thereby acquires a positive charge.

According to present conventions, a galvanic cell is represented by keeping view the following points:

(1) Anode is written on the left-hand side, while the cathode is written on the right-hand side.

(2) The electrode on the left (i.e., anode) is written by writing the metal (or solid phase) first and then the electrolyte. Two are separated by a vertical line or a semicolon. The electrolyte may be represented by the formula of the whole compound or by ionic species. Additional information regarding the concentration may also be mentioned in the bracket.

Eg., $Zn \mid Zn^{2+}$ or $Zn ; Zn^{2+}$ or $Zn \mid ZnSO_4(1M)$

Pt, H_2 (1 atm.) $\mid H^+(1M)$.

(3) The cathode of the cell (at which reduction takes place) is written on the right-hand side. In this case, the electrolyte is represented first and the metal (or solid phase) thereafter. The two are separated by a vertical line or a semicolon.

E.g., $Cu^{2+} \mid Cu$ or $Cu^{2+}; Cu$ or Cu^{2+} (1M) $\mid Cu$ or $Cu2^+$ (1M); Cu

(4) A salt bridge is indicated by two vertical lines, separating the two half cells. Thus applying the above considerations to Daniel cell, we may represent as:

$$Zn \mid Zn^{2+} (1M) \parallel Cu^{2+}(1M) \mid Cu$$

The electromotive force of the cell (EMF): The difference in potential which causes a current to flow from an electrode of higher potential to that of lower potential is called the electromotive force (emf). The cell potential is represented by the $E_{cell.}$

$$E_{cell} = E_{RHS} - E_{LHS}$$

$$E_{cell} = E_{cathode} - E_{anode}$$

Standard emf of the cell is defined as the emf of the galvanic cell when the reactants and products of the cell reaction are at unit concentration or unit activity, at 298K and 1-atmosphere pressure.

$$E^o_{cell} = E^o_{RHS} - E^o_{LHS}$$

Electrode is a part of an electrochemical setup where an element is in contact with its own ions at which oxidation or reduction takes place.

An electrode is a point where current enters and leaves the electrolyte. When the current leaves the electrodes it is known as the cathode and when the current enters it is known as the anode. Electrodes are vital components of electrochemical cells.

Types of Electrodes

1. Metal/Metal ion electrode (M/M^{n+})

When a metal is immersed in its own salt solution such type of electrode is called metal/metal ion electrode. **Eg: Zn/Zn^{2+}, Cu/ Cu^{2+}**

In general M/M^{n+}

The electrode reaction is $M^{n+} + ne^{-} \rightarrow M$

Electrode potential depends on the logarithmic concentration of metal ion.

2. Gas Electrode

The gas is bubbled around an inert metal like platinum which is immersed in a solution containing ions of the same gas. **Eg: Hydrogen electrode or SHE, chlorine electrode.**

Electrode potential depends on the logarithmic concentration of the ion and the pressure at which the gas is bubbled.

3. Metal insoluble metal salt/ common ion electrode

The metal (M) is covered with an insoluble metal salt (MX) is in contact with a solution containing an anion of the insoluble metal salt (X).

Eg: Calomel electrode ($Hg/Hg_2Cl_2/Cl^{-}$), silver-silver chloride electrode ($Ag/AgCl/Cl^{-}$)

Electrode potential is the logarithmic concentration of the common ion (Cl^{-})

4. Redox electrode

In this electrode, an inert metal is immersed in a solution containing ions of the same metal having two different oxidation states.

Eg: $Pt/Fe^{2+}/Fe^{3+}$

Reaction: $Fe^{2+} \rightarrow Fe^{3+} + e-$

Electrode potential is the logarithmic concentration of all ionic species involved in the redox reaction.

5. Ion selective electrode

In this type, the sensing part of the electrode is usually made of an ion-specific membrane. The membrane can be glass membrane, crystalline membrane, and ion-exchange resin membrane.

Eg: Glass electrode

Single electrode potential (Reduction potential):

Electrode potential is defined as the potential developed on the electrode at the interface when it is in contact with a solution of its own ions. It is denoted by E. All single electrode potentials represent reduction potentials which is the measure of the tendency of an electrode to undergo reduction.

Standard electrode potential is the is the potential developed when the electrode (metal) is in contact with solution of unit concentration (1M) at 298K. It is denoted by E^{o}.

Evaluation of single electrode potential:

Single electrode potential can be calculated using Nernst equation. Nernst equation is an expression of a quantitative relationship between electrode potential/cell potential and concentration of the electrolyte species in an electro-chemical reaction.

$$M^{n+}(aq) + ne^- \rightleftharpoons M(s) \text{ [Reduction reaction]}$$

$$E = E^\circ + \frac{2.303\,R\,T}{n\,F} \log [M^{n+}]$$

E= Electrode potential
E°= Standard electrode potential
R= Universal gas constant (8.314 joules / mol/ K)
T= Temperature in Kelvin scale
F= Faraday constant (96,500 Coulombs / mol)
n = Number of electrons transferred in the half reaction.
$[M^{n+}]$ = Concentration of metal ion at given time
At 298 K, by substituting the values of R and F, the equation reduces to,

$$E = E^\circ + \frac{0.0591}{n} \log [M^{n+}]$$

This expression is known as the **Nernst equation** for electrode potential at 298 K. From these equations, it is clear that,

i) If the concentration of the solution (M^{n+}) is increased, the electrode potential increases and vice versa.
ii) If the temperature is increased, the electrode potential increases and vice versa.

Nernst equation for emf of cells: Nernst equation may also be used to calculate the emf of chemical cells

$$E_{cell} = E^o cell - \frac{0.0591}{n} \log \frac{[products]}{[reactants]}$$

$$\text{or, } E_{cell} = E^o_{cell} + \frac{0.0591}{n} \log \frac{[reactants]}{[products]}$$

$$\text{or, } E_{cell} = E^o_{cell} + \frac{0.0591}{n} \log \frac{[species\ at\ cathode]}{[species\ at\ anode]}$$

For a Daniel cell, $Zn + Cu^{2+} \rightarrow Zn^{2+} + Cu$

$$E_{Daniel\ cell} = E^o_{Daniel\ cell} + \frac{0.0591}{n} \log \frac{[Cu^{2+}]}{[Zn^{2+}]}$$

Reference electrode

Any electrode of constant and reproducible potential used to determine the potential of other electrode. E.g.: Standard hydrogen electrode (primary reference electrode)

Secondary reference electrodes: Because of the difficulties involved in the use of standard hydrogen electrode as reference electrode, some other electrodes with constant electrode potential, have been developed. These electrodes are referred to as secondary reference electrodes. Two such electrodes are (i) calomel electrode (ii) silver-silver electrode.

(i) Calomel electrode (mercury-mercurous electrode):

Construction: Mercury is placed at the bottom of glass tube. A paste of calomel (Hg_2Cl_2) and mercury is placed over the pool of mercury. The remaining part of the tube is filled either a saturated or standard (normal or decinormal) solution of potassium chloride. A platinum wire fused in a glass tube, dipped into mercury, is used for electrical contact. A salt bridge is used to couple with other half-cells (Fig. 3). The calomel electrode is represented as Hg | Hg_2Cl_2 (s) | KCl (saturated or standard) or Hg, Hg_2Cl_2 (s), KCl (saturated or standard).

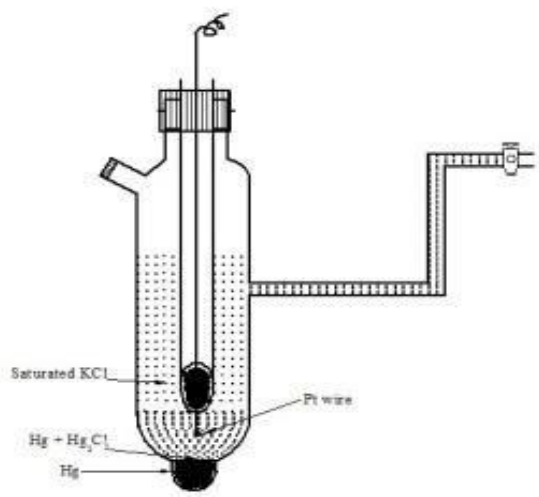

Fig. 3. Calomel electrode

Working: Calomel electrode can act as anode or cathode depending on the nature of the other electrode of the cell. The electrode reactions are represented as follows.

As anode:

$2Hg \rightarrow Hg_2^{2+} + 2e^-$

$Hg_2^{2+} + 2Cl^- \rightarrow Hg_2Cl_2$

$2Hg + 2Cl^- \rightarrow Hg_2Cl_2 + 2e^-$

As cathode:

$Hg_2Cl_2 \rightarrow Hg_2^{2+} + 2Cl^-$

$Hg_2^{2+} + 2e^- \rightarrow 2Hg$

$Hg_2Cl_2 + 2e^- \rightarrow 2Hg + 2Cl^-$

The net reversible electrode reaction is

$$Hg_2Cl_2 + 2e^- \rightleftharpoons 2Hg + 2Cl^- \quad \text{or} \quad \frac{1}{2}Hg_2Cl_2 + e^- \rightleftharpoons Hg + Cl^-$$

$$\textbf{Electrode potential E} = E^0 - \frac{2.303\,RT}{F}\log\,[Cl^-]$$

$$\textbf{At 298K, } E_{cal} = E^0_{cal} - 0.0591 \log\,[Cl^-]$$

Since the calomel electrode is reversible with respect to chloride ion its electrode potential depends on the concentration of KCl solution.
At 298 K, the electrode potentials as follows:

KCl Concentration	0.1 N	1 N	Saturated
Electrode potential (V)	0.334	0.281	0.2422

Advantages of calomel electrode:
1. It is very simple in construction.
2. The potential is reproducible and stable over a long period.
3. Its electrode potential will not vary with temperature.

Application of calomel electrode in the determination of single electrode potential
The test electrode (e.g., Zn^{2+}/Zn) is coupled with a saturated calomel electrode (Fig. 4). The cell, so formed, may be represented as
$Zn(s) \mid ZnSO_4\,(1M) \parallel KCl\,(Saturated\ solution) \mid Hg_2Cl_2\,(s) \mid Hg(l)$

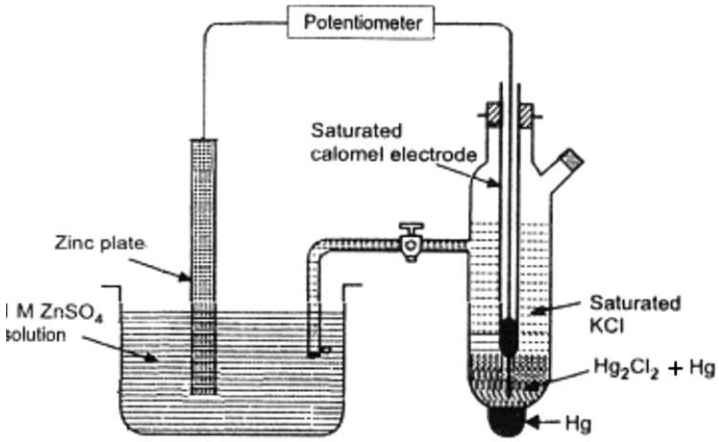

Fig. 4. Determination of electrode potential of zinc electrode using calomel electrode as reference electrode.

The calomel electrode is written on the right as reduction takes place at this electrode. The emf of this cell measured potentiometrically.

$$\text{Then } E_{cell} = E_{cathode} - E_{anode}$$
$$= E_{cal} - E_{Zn2+/\,Zn}$$
$$= 0.2422 - E_{Zn2+/\,Zn}$$
$$\textbf{i.e., } E_{Zn2+/\,Zn} = 0.2422 - E_{cell}$$

Concentration cell: A concentration cell is an electrochemical cell made of two-half cells having identical electrodes, identical electrolyte, except that the concentrations of electrolyte solutions are different **(Fig. 5)**. Two half cells may be joined by a salt bridge.

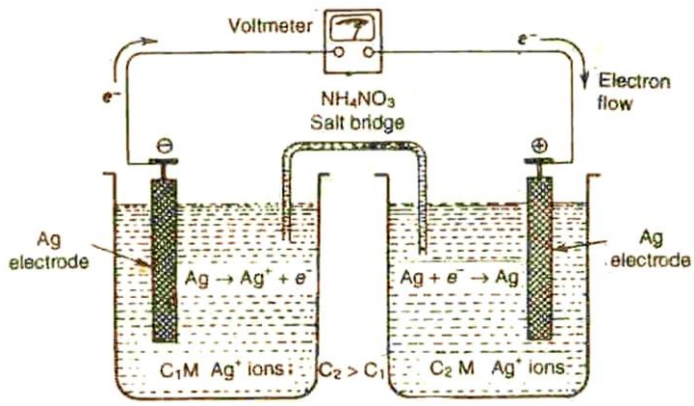

Fig. 5. Concentration cell

The cell is represented by

$$^{-}Ag \mid AgNO_3\ (C_1M) \parallel AgNO_3\ (C_2M) \mid Ag^{+}\ ;\ (C_2 > C_1)$$

The Ag electrode which is in contact with lower concentration (C_1) of the electrolyte acts as anode where oxidation occurs and enters the solution. The Ag electrode which is in contact with higher concentration (C_2) of the electrolyte acts as cathode where reduction occurs, and deposition of Ag occurs.

Electrode reactions: Anode: $Ag_{(s)} \rightarrow Ag^{+}_{(C1M)} + e^{-}$

Cathode: $Ag^{+}_{(C2M)} + e^{-} \rightarrow Ag_{(s)}$

Cell reaction: $Ag^{+}_{(C2M)} \rightarrow Ag^{+}_{(C1M)}$

There is no net chemical reaction but only concentration change takes place. Evidently, the emf so developed is due to the mere transference of metal ions from the solution of higher concentration (C_2) to the solution of lower concentration (C_1).

$$\text{Emf of the cell } (E_{cell}) = E_{cathode} - E_{anode}$$

According to Nernst Eq, $E = E^{o} + \left[\frac{RT}{nF}\right] \ln [M^{n+}]$

$$E_{cell} = [E^{o} + \left[\frac{RT}{nF}\right] \ln C_2] - [E^{o} + \left[\frac{RT}{nF}\right] \ln C_1]$$

$$E_{cell} = \left[\frac{RT}{nF}\right] \ln \frac{C2}{C1} \ldots\ldots\ldots\ldots(1)$$

At 298 K,

$$E_{cell} = \left[\frac{0.0591}{n}\right] \log \frac{C2}{C1} \ldots\ldots\ldots\ldots(2) \qquad \text{where, } C_2 > C_1$$

Note: (i) When $C_1 = C_2$ (concentrations are equal), log $[C_2 / C_1] = 0$ and hence no electricity flows (since emf = 0).
(ii) When $[C_2 / C_1] > 1$ (i.e., $C_2 > C_1$), log $[C_2 / C_1]$ is positive. Thus, the direction of spontaneous reaction is from the more concentrated solution (C_2) to less concentrated solution (C_1).
(iii) Higher the ratio C_2/C_1, higher is the value of cell potential. For eg. if the ratio C_2/C_1 increases from 0.001 to 0.1 (i.e., 100 times) the voltage increases three-fold.

Ion-selective electrode:
Ion-selective electrode is the one which selectively responds to a specific ion in a mixture and potential developed at the electrode is a function of concentration of that ion in the solution. The electrode generally consists of a membrane which can exchange the specific ions with the solution with which it is in contact. Therefore, these electrodes are also referred to as membrane electrodes.

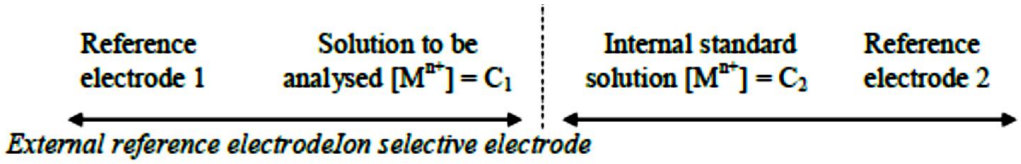

Applications: Ion selective electrodes are used in determining

- The concentration of several cations such as H^+, Li^+, Na^+, K^+, Ag^+, NH^{4+}, Cd^{2+}, Pb^{2+}, Cu^{2+}, Ca^{2+} and hardness [Ca^{2+} + Mg^{2+}];
- The concentration of anions such as F^-, NO^{3-}, CN^-, S^{2-} and halide ions;
- The pH of a solution using glass electrode (H^+ ion-selective electrode) and
- The concentration of gas using gas sensing electrodes. For example, an electrode which measures the level of CO_2 in blood samples makes use of glass electrode in contact with a very thin CO_2 permeable silicone rubber membrane soaked in a dilute solution of sodium bicarbonate.

Glass electrode
Construction: A glass electrode (Fig. 6) consists of a long glass tube with a thin-walled glass bulb at one end. Special glass (Corning glass containing 22% Na_2O, 6% CaO and 72% SiO_2) of low melting point and high electrical conductance is used for the purpose. This glass can specifically sense hydrogen ions up to a pH of about 9. The bulb contains 0.1 M HCl and a Ag/AgCl electrode (as internal reference electrode) is immersed into the solution and connected by a platinum wire for electrical contact.
The electrode is represented as, Ag | AgCl (s) | HCl (0.1M) | glass.

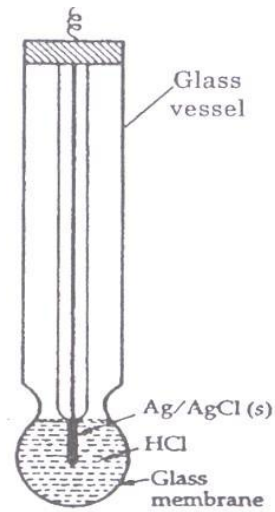

Fig. 6. Glass electrode

Working: The glass is a partially hydrated aluminosilicate containing sodium or calcium ions. If a thin-walled glass bulb containing an acid is immersed in another solution, the membrane undergoes an ion exchange reaction.

$$\underset{\text{solution}}{H^+} + \underset{\text{membrane}}{Na^+Gl^-} \rightleftharpoons \underset{\text{solution}}{Na^+} + \underset{\text{membrane}}{H^+Gl^-}$$

The Na^+ ions on the glass membrane are exchanged for H^+ ions in the solution at the hydrated layer. Exchange of ions at the inner and outer hydrated layer is represented in Fig.7.

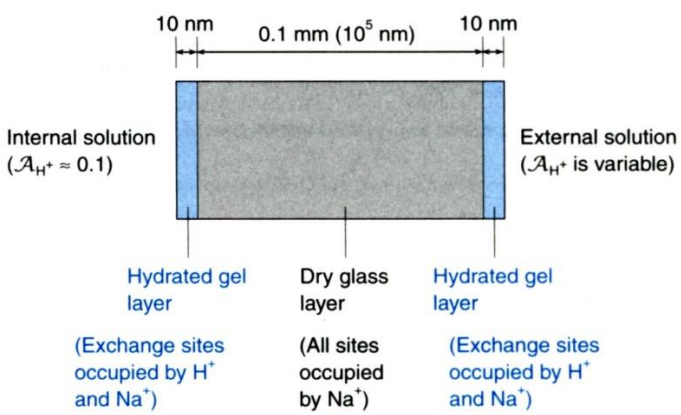

Fig. 7. Ion exchange across glass membrane

The potential of the electrode is controlled by the difference between the hydrogen ion concentration inside and outside the thin glass membrane. Since the H^+ ion concentration inside the electrode is constant, the electrode's potential varies only with the concentration of H^+ in the solution outside. Thus, the potential arises from the difference in positions of ion-exchange equilibrium on each of the two surfaces.

The overall potential of the glass electrode depends upon three parameters

1) The boundary potential (E_b)
2) The potential of the internal Ag/AgCl reference electrode. ($E_{Ag/AgCl}$)
3) A small unpredictable contribution called the asymmetry potential, (E_{asym})

1) The boundary potential E_b: It varies with the pH of the analyte solution. It is made up of two potentials, E_1 & E_2 which develop at the two surfaces of the glass membrane i.e. the potential developed at the inner glass surface and the potential developed at the outer glass surface.

$$\mathbf{E_b = E_1 - E_2} \quad \ldots\ldots\ldots\ldots(1)$$

Where E_b is the boundary potential

E_1 = potential developed at the interface between the exterior of the glass and the analyte solution

E_2 = Potential developed at the interface between the internal solution and the interior of the glass.

E_b = The boundary potential is related to the concentration of hydrogen ion in each of the solutions by the Nernst-like equation.

$$E_b = E_1 - E_2 = 0.0591 \log C_1 / C_2 \quad \ldots(2)$$

where C_1 = HCl solution of unknown pH (external solution) and C_2 = HCl solution of known pH (internal solution)

$$E_b = K + 0.0591 \log C_1 \quad \ldots\ldots (3) \quad (\text{Recall pH= -log } [H^+])$$

$$\mathbf{E_b = K - 0.0591\ pH} \quad \ldots.. (4) \quad (\text{where } K = -0.0591 \log C_2)$$

The boundary potential is then a measure of the hydrogen ion concentration of the external solution.

2) The potential of the internal Ag/AgCl reference electrode, $E_{Ag/AgCl}$

3) A small unpredictable contribution called the asymmetry potential, E_{asym}

The sources of the asymmetry potential include the following.

i) Differing conditions of strain in the two glass surfaces during manufacture
ii) Mechanical abrasion on the on the outer surface during use
iii) Chemical etching of the outer surface during use.

The asymmetry potential changes slowly with time. The glass electrode potential can be written in the equation form as

$$\mathbf{E_g = E_b + E_{Ag/AgCl} + E_{asym}} \quad \ldots\ldots\ldots\ldots\ldots\ldots\ldots (5)$$

Substitution of eqn (4) for E_b, gives

$$E_g = K - 0.0591\ pH + E_{Ag/AgCl} + E_{asym} \quad \ldots\ldots (6)$$

$$\mathbf{E_g = E^\circ_g - 0.0591\ pH} \quad \ldots\ldots\ldots (7)$$

(where $E^\circ_g = K + E_{Ag/AgCl} + E_{asym}$ and hence its value is a constant)

Application of glass electrode:

The glass electrode is immersed in the solution, the pH of which is to be determined. It is combined with a reference electrode such as a calomel electrode through a salt bridge (Fig. 8).

The cell assembly is represented as,

$Hg_{(l)}$ | $Hg_2Cl_{2\ (s)}$ | KCl (Saturated solution) || Solution of unknown pH | glass | HCl $_{(0.1M)}$ | $AgCl_{(s)}$ | $Ag_{(s)}$

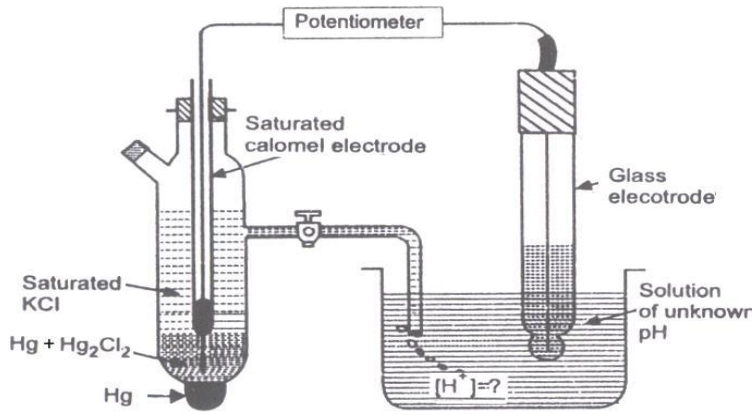

Fig. 8. Determination of pH using glass electrode

The emf of the above cell, E_{cell} is measured using an electronic voltmeter with a null type potentiometer circuit (or a pH meter) (An ordinary potentiometer with a low resistance of the galvanometer is not used because of high internal resistance of the glass electrode). E_{cell} measured is the difference between the calomel electrode (E_{cal}) and E_g.

$$E_{cell} = E_g - E_{cal}$$

$$E_{cell} = [E_g^\circ - 0.0591\ pH] - E_{cal}$$

$$\text{Therefore, pH} = \frac{E_g^0 - E_{cal} - E_{cell}}{0.0591}$$

Advantages of glass electrode:

(i) Glass electrode can be employed in the presence of strong oxidizing or reducing substances and metal ions.

(ii) It is not poisoned easily.

(iii) Accurate results are obtained between pH range 1-9. However, by using special glass electrodes, pH 1-13 can be measured.

(iv) It is simple to operate, can be used in portable instruments and therefore extensively used in chemical, industrial, agricultural and biological laboratories.

Limitations of glass electrode:

(i) In strongly acidic solutions of pH<1, the salt effect due to anions is observed.

(ii) It can be used upto a pH of 13 but being sensitive to Na^+ ions above a pH of 9, an alkaline error is introduced, which should be taken into consideration.

(iii) It does not function properly in some organic solvents like pure alcohol.

ENERGY SYSTEMS

Batteries

A **battery** is a device consisting of two or more galvanic cells connected in series or parallel or both, that can store chemical energy in the form of active materials and on demand convert it into electrical energy through electrochemical redox reaction. Batteries can thus generate power and can act as portable sources of electrical energy.

The basic electrochemical unit in a battery is a galvanic cell. The components of such a cell are shown schematically in Fig. 1. In common usage, the term battery is often applied to a single cell.

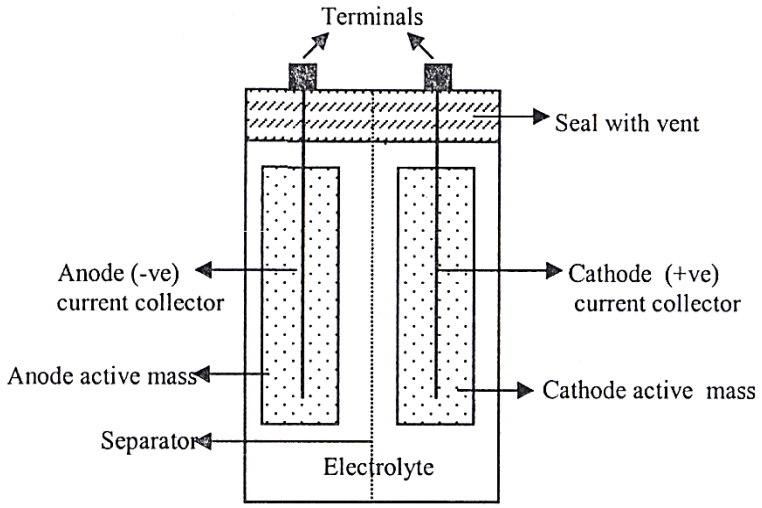

Fig.1. Principal Components of a battery

The principal components of a battery are:

1. ***The anode or negative electrode***- it gives out electrons to the external circuit by undergoing oxidation during electrochemical reaction.
2. ***The cathode or positive electrode***-it accepts electrons from the external circuit and reduction of active species occurs.
3. ***The electrolyte-an ionic conductor***: The electrolyte (active mass in the anode and cathode compartments) is commonly a solution (or a slurry) of an acid, alkali or salt having high ionic conductivity. Solid electrolytes with appreciable ionic conductivity at the operating temperature of the cell are also used.
4. ***The separator***- The material that electronically isolates the anode and the cathode in a battery to prevent internal short circuiting is referred to as a separator. It is permeable to the electrolyte so as to maintain the desired ionic conductivity. Thus, the main function is to transport ions from anode compartment to the cathode compartment and vice versa. Fibrous forms of regenerated cellulose, vinyl polymers and polyolefins, cellophane and nafion membranes are commonly used as separators.

The battery components are selected based on the following properties.

***Anode material**:* (i) ease of oxidation (low reduction potential) (ii) capacity to deliver high coulombic output (iii) good conductivity (iv) high stability and (v) ease of fabrication. The anodes are usually low-cost materials. Zinc is predominantly used as anode since it has the properties mentioned above. Lithium, the lightest metal, is also used as an anode in modern batteries.

Cathode material: (i) capacity to facilitate reduction of active species in the medium (ii) resistance to electrolyte.

Electrolyte: (i) good ionic conductivity but poor electrical conductivity to prevent internal short circuit (ii) resistance to the electrode materials (iii) safety during handling.

Separator: (i) permeability for passage of ions from anode to cathode compartment and vice versa during discharging and charging (ii) capacity to prevent mixing of active masses in the two components (iii) high ionic conductivity but electronically insulating (iv) high strength flexibility (v) resistant to the active materials.

The cell is designed such that the electrodes are surrounded by the active mass; the electrodes are electrically separated by a suitable separator so as to prevent internal short-circuiting. The cells are built in many shapes and configurations-cylindrical, button, flat plates and prismatic. The cell components are designed according to the desired cell shape of the cell. The cells are sealed by different methods to prevent leakage and drying out.

Classification of batteries:

Batteries are classified as (i) primary (irreversible) batteries, (ii) secondary (reversible) batteries and (iii) reserve batteries.

(a) ***Primary batteries***: In primary batteries, the cell reactions are not completely reversible and hence are also referred to as irreversible batteries. These are not rechargeable and once discharged have no further electrical use. Examples of primary batteries are Zn-MnO_2 battery and Li-MnO_2 battery.

(b) ***Secondary batteries***: Secondary batteries are rechargeable. The cell reactions are reversible and hence these are also referred to as storage or reversible batteries. After discharge, secondary batteries can be recharged electrically to their original condition by passing current through them in the direction opposite to that of discharge current. Lead storage battery and nickel-cadmium battery are examples of secondary batteries.

(c) ***Reserve batteries*****:** Reserve batteries are batteries which may be stored in an inactive state and made ready for use by activating them prior to the application. The activation involves adding electrolyte or any other cell component. One of the components is isolated and stored separately and fitted (or added) just before it is needed. Electrolyte is the component that is usually isolated and hence the battery has long-term storage capacity. These batteries are highly active component materials for low temperature performance. They are designed to meet extremely long and environmentally severe storage requirements. *Uses:* To deliver high power for a relatively short period of time after activation in applications such as radiosondes (air borne instruments to send

meteorological information back to earth by radio), missiles, trajectory, mid-ocean disasters and crisis in space.

Examples: Mg water activated batteries (Mg-AgCl and Mg-CuCl); Zn-Ag_2O batteries. *Advantages:* (i) Unlimited shelf life when properly packed. (ii) High reliability of performance. (iii) Variety of design options.

Lithium-ion battery

The Li-ion battery has a four-layer structure. The **anode** (negative electrode) is made of lithium, intercalated (included between the layers) in graphite, and has a current collector of thin Copper foil. The **cathode** (positive electrode) is made up from lithium liberating compounds such as Lithium cobalt oxide (or Lithium manganese oxide or Lithium Nickel-oxide), and has a current collector of thin Aluminium foil. An **electrolyte** is made with lithium-salt (LiPF6, LiBF4, or LiClO4) and organic solvents (ethylene carbonate or dimethyl carbonate). The electrolyte provides a conductivity medium for lithium ions to move between the electrodes. A **separator** is a fine porous polymer film such as polyethylene or polypropylene.

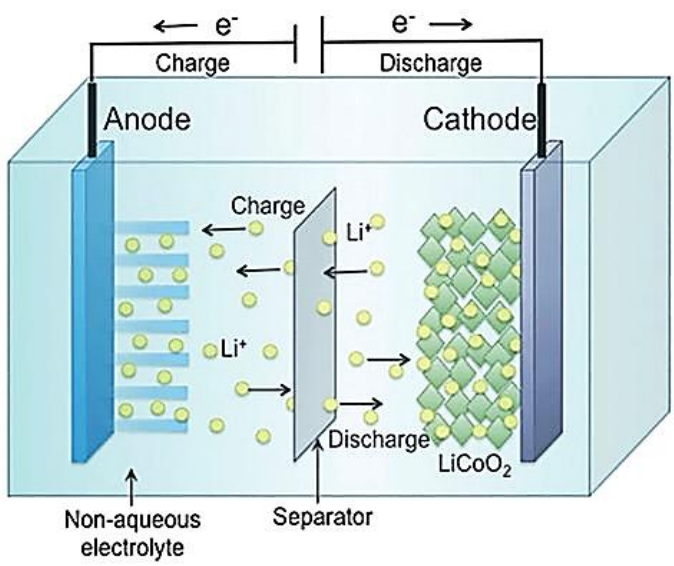

Fig. 1. Li-ion battery

Working: During discharge Li ions are dissociated from the anode and migrate across the electrolyte and are inserted into the crystal structure of cathode. At the same time electrons travel through the external circuit from negative to positive terminals powering external devices to balance the reaction.

At the anode: $Li_xC \rightarrow C + xLi^+ + x\,e^-$

At the cathode: $Li_{1-x}CoO_2 + x\,Li^+ + x\,e^- \rightarrow LiCoO_2$

Overall reaction: $Li_xC + Li_{1-x}CoO_2 \rightarrow C + LiCoO_2$

During charging: Lithium in cathode electrode material is ionized and moves from cathode to anode and gets inserted into the anode. Electrons are pumped by the charger from the cathode to the anode terminals.
It gives an overall voltage of 3.6 Volts (V), more than twice that of a standard alkaline battery. This gives much better energy per volume ratio or energy density than an ordinary alkaline battery or other common rechargeable battery such as a nickel-metal hydride.

Applications: They are used to operate laptops, computers, mobile phones, telecommunication equipment, portable radios and TVs, pagers and aerospace applications.

Flow Battery
A flow battery is an electrochemical device that converts the chemical energy in the electro-active materials directly to electrical energy, similar to a conventional battery and fuel cells. A flow battery is an electrical storage device that is a cross between a conventional battery and a fuel cell. The electro-active materials in a flow battery, however, are stored mostly externally in an electrolyte and are introduced into the device only during operation. Liquid electrolyte of metallic salts is pumped through a core that consists of a positive and negative electrode, separated by a membrane. The ion exchange that occurs between the cathode and anode generates electricity.
The fundamental difference between conventional batteries and flow cells is that energy is stored as the electrode material in conventional batteries but as the electrolyte in flow cells. One of the biggest advantages of flow batteries is that they can be almost instantly recharged by replacing the electrolyte liquid, while simultaneously recovering the spent material for re-energization. Different classes of flow cells (batteries) have been developed, including vanadium redox, hybrid membrane less and organic.

Vanadium redox flow battery:
The vanadium redox flow battery consists of an electrolyte comprised of vanadium and sulfuric acid flows over nonreactive carbon or carbon-filled polymer electrodes. The structure of vanadium redox flow batteries is schematically shown in Fig. 2.

Working:
During discharging oxidation occurs at the anode (V^{2+} to V^{3+}) which causes electrons to flow from negative to positive electrode. At the same time reduction occurs at the cathode by gaining electrons (V^{5+} to V^{4+}). While these redox reactions occur, proton ions diffuse across the membrane separating two half-cells to maintain charge neutrality and also to complete the circuit.

At the anode: $V^{2+} \rightarrow V^{3+} + e^-$

At the cathode: $VO_2^+ + 2H^+ + e^- \rightarrow VO^{2+} + H_2O$

Overall reaction: $V^{2+} + VO_2^+ + 2H^+ \rightarrow V^{3+} + VO^{2+} + H_2O$

During charging, the redox reactions are reversed by connecting to an external power source. The standard cell voltage for the all-vanadium redox flow batteries is **1.26 V.**

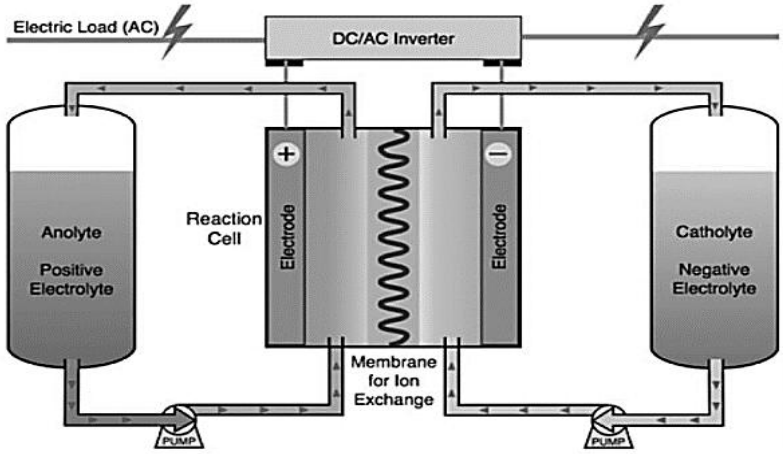

Fig.2.Vanadium Redox flow battery

Applications: (i) Load balancing (ii) Storing energy from renewable sources such as wind or solar for discharge during periods of peak demand. (iii) UPS, where the battery is used if the main power fails to provide an uninterrupted supply. (iv) Power conversion (v) Electric vehicles – Because flow batteries can be rapidly "recharged" by replacing the electrolyte, they can be used for applications where the vehicle needs to take on energy as fast as a combustion engine vehicle. (vi) Stand-alone power system (vii) Telecommunications (viii) Military equipments

Solar Energy

Solar energy is the heat and radiant light from the Sun that can be harnessed using devices like heaters, solar cooker and photovoltaic cells to convert it to electrical energy and heat.

Photovoltaic cells (PV cells) or Solar cells are the semiconductor devices which convert solar energy directly into an electrical energy (photoelectric effect). The Solar cells or Photovoltaic cells are made of semiconductors (n-type and p-type) which have the capacity to absorb light. When n-type and p-type semiconductors are bought together a semiconductor diode is formed. The semiconductor diode separates and collects the carriers and conducts the generated electrical current preferentially in a specific direction.

Construction of PV cell:

A typical silicon photovoltaic cell is composed of a thin polycrystalline silicon wafer consisting of an ultra-thin layer of n-type silicon on top and a p-type silicon at the bottom. Hence a p-n junction is formed. A metallic grid, over n-type silicon, forms one of the electrical contacts of the PV cell. The top n-type silicon is coated with an antireflective layer to increase the amount of light

transmitted to the semiconductor (prevent reflection of solar light). The other electrical contact is formed by a metallic layer on the back of p-type silicon (Fig. 3).

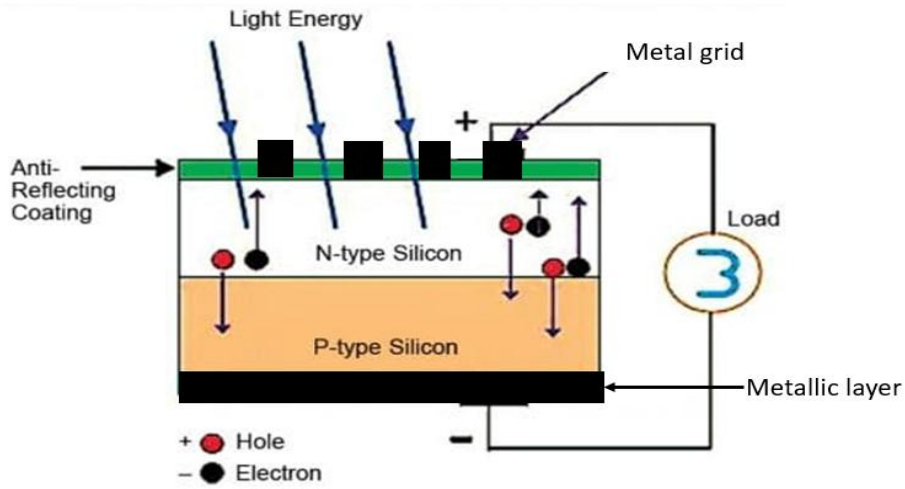

Fig.3. A photovoltaic cell

Working of PV cell:

PV cells work on the principle of photoelectric effect **E=hν** (E-Energy, h-Planks constant, ν-frequency). In the n-type layer, there are excess of electrons, and in the p-type layer, there are excess of positively charged holes (which are vacancies due to the lack of valence electrons). Sandwiched between the two layers is the p-n junction (depletion zone), generating an internal electric field.

If the incident energy (*hv*) is greater than the band-gap of the semi-conductor material, electrons of the semi-conductor material get excited and are released to form electron-hole pairs. The internal electric field at the junction drives the ejected electrons toward the n-type layer and the holes toward the p-type layer. Instead, if the n-type and p-type layers are connected to a load, then the electrons flow through the external circuit, thereby producing direct current (DC) electricity. A typical photovoltaic cell develops a voltage of 0.5 to 1 volt and a current density of 20-40 mA/cm^2. Multiple cells are connected to form a solar panel for usable power output.

Applications: PV cells can meet the need for electricity for parking meters, temporary traffic signs, emergency phones, radio transmitters, water irrigation pumps, stream-flow gauges, remote guard posts, lighting for roadways, and more.

Advantages of Solar Cell

1. Clean and green energy Source
2. Free raw material
3. Versatile in nature
4. Significant impact on the smart energy system
5. Low maintenance and low operational cost
6. Silent in working

Disadvantages of Solar Cell

1. Sunlight is a diffuse source, ie. It is relatively low-density energy.
2. High installation costs.
3. Energy can be produced only during the day time.
4. Space required to generate power output is relatively more.
5. Efficiency of solar cells depends on the seasonal variations, latitude and climate.

Solar Grade Silicon

Silicon is an element with energy gap of 1.12 eV between valence band and conduction band. In order to increase the conductivity, silicon is dopped either with trivalent or pentavalent impurities. Doped silicon ionises at lower temperature. Its minority carrier life is 50-300 micro seconds. Minority carrier life is the time lapsed before an ejected electron combine with hole. Doped silicon is not hard and can be moulded into any shape.

The silicon compounds such as silane (SiH_4) and chlorosilane ($SiCl_4$, $HSiCl_3$, H_2SiCl_2) are volatile and can be separated from other impurities by simple distillation procedure. This is the principle of purification to obtain semiconductor grade silicon.

Production of solar grade silicon is done by Union carbide process.

The Union Carbide process was initially developed by Union Carbide Chemicals (USA), to produce high purity silicon for PV cells. The major steps involved in the synthesis are:

i) Initially, SiO_2 is reduced with carbon (coke or charcoal) in an electric arc furnace at 1500-2000°C to produce metallurgical grade silicon (98% purity).

$$SiO_2 + 2C \longrightarrow Si + 2CO$$

ii) The metallurgical grade silicon is treated with HCl at 300 ℃ to form trichlorosilane.

$$Si + 3\ HCl \longrightarrow HSiCl_3 + H_2$$

iii) Trichlorosilane is then passed through fixed bed columns containing ammonium ion exchange resin catalyst where trichlorosilane converts to silicon hydride.

$$2\ HSiCl_3 \longrightarrow H_2SiCl_2 + SiCl_4$$

$$3\ H_2SiCl_2 \longrightarrow SiH_4 + 2\ HSiCl_3$$

The products obtained in the above process are separated by distillation as they are highly volatile. Tetrachlorosilane and trichlorosilane are again recycled to the hydrogenation reactor & the exchange resin respectively.

iv) Silicon hydride or silane is further purified by distillation & passed into a reactor containing heated silicon seed rods. Silane gets pyrolysed (600 to 900 ℃) to form polysilicon (semiconductor grade silicon).

$$SiH_4 \longrightarrow Si + 2\ H_2$$

****