UNIT – 3	9 Hours
Introduction to Power Systems	
Energy sources: (Conventional -Hydro, Nuclear, Thermal, (Non-Conventional -Solar, Wind, Tidal), Basic Power plant components, Voltage levels in generation Overview Of electric power Transmission system (HVAC & HVDC), transmission Voltage levels(Low, Medium, High, Extra High Voltage)	

Power System

A power transmission system is the network that transfers electricity from generating stations to distribution networks. It carries high-voltage power over long distances with minimum losses. This system includes transmission lines, towers, substations, and transformers. Its main job is to ensure continuous and reliable power flow to different regions.

The electrical power system can be divided into three major components: Generation (G), Transmission (T) and Distribution (D), as shown in Fig 3.1.

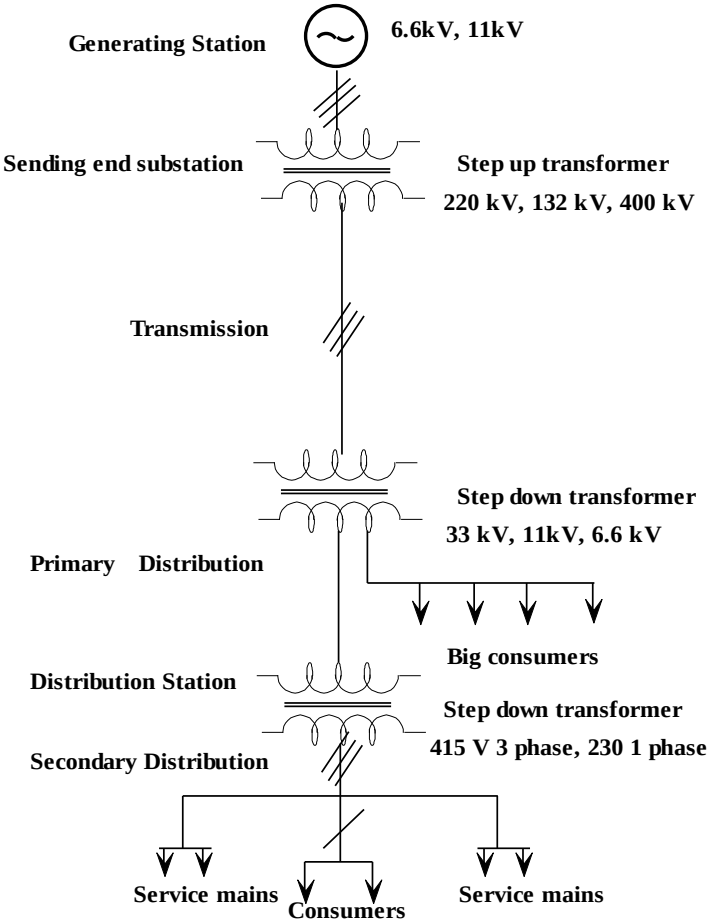

Fig 3.1 Schematic diagram of a typical power system

3.1Generation of Electricity

Energy is one of the major inputs for the economic development of any country. In case of the developing countries, the energy sector assumes a critical importance in view of the ever-increasing energy needs requiring huge investments to meet them. Electrical Energy can be generated in two ways as shown in figure 3.2

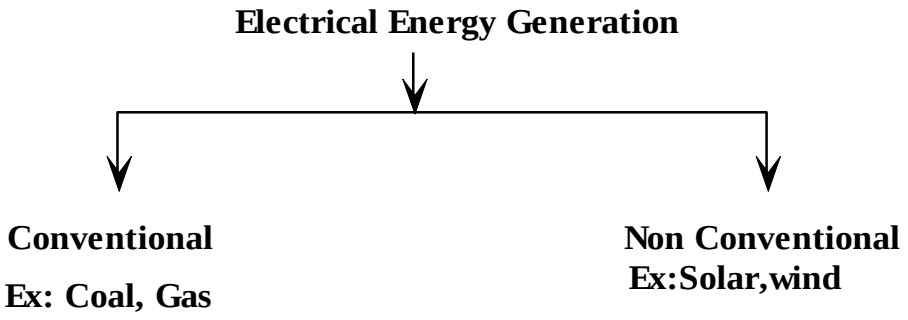

Fig: 3.2 Classification Electrical Energy Generation

Conventional energy sources that are limited in supply, like fossil fuels, which take millions of years to form and are being depleted. Non-conventional energy sources that are renewable and generally considered more environmental friendly.

3.1.1 Conventional Energy sources

Conventional Sources of Energy are also known as non-renewable sources of energy and are available in limited quantity apart from hydro-electric power. The electrical power generation centers are generally called as power plants. Based on types of source of energy used for electricity generation, conventional energy plants are hydroelectric power plants, thermal power plants and nuclear power plants.

3.1.1.1 Hydroelectric power plants

Hydroelectric power is electricity generated by harnessing the energy of flowing water. It captures water's natural force - rushing rivers or cascading waterfalls to spin turbines connected to generators. The process involves converting mechanical energy from flowing water into electrical energy, with the efficiency of the conversion being very high. Hydro electric power plants are classified according to the available head (vertical height through which water falls) as follows:

1. Low Head Scheme

- **Head Range:** Less than 30 meters (typically below 30 m).

2. Medium Head Scheme

- **Head Range:** Between 30 meters and 100 meters.

3. High Head Scheme

- **Head Range:** Greater than 100 meters.

Layout of a high head hydroelectric plant is shown in Fig 3.3.

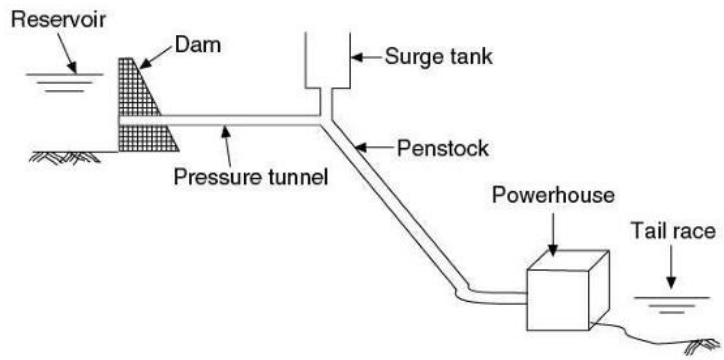

Fig 3.3:Typical layout of high-head hydroelectric plant.

- **Dam or Barrage:** Creates water head for turbines. Classified by function, shape, material, and design.
- **Reservoir & Forebay:** Stores water for generation and irrigation. Forebay regulates temporary water storage.
- **Water-Conduit System:** Carries water from reservoir to turbine via pressure tunnels or penstocks.
- **Tailrace:** Discharges water from turbine back into the river.
- **Surge Tank:** Acts as a pressure-release valve, preventing water hammer effect in the conduit system.
- **Trash Rack:** Prevents debris from damaging gates and turbine runners.
- **Prime Mover (Turbine):** Converts water's kinetic/potential energy into mechanical energy to rotate generators.
- **Powerhouse:** Houses generators, turbines, and control systems, often at the dam's foot.
- **Spillway:** Discharges excess reservoir water to prevent overtopping, acting as a safety valve.

Working: A dam is built across a river to create a large reservoir, storing water and creating a height difference, or "head". The water in the reservoir has potential energy. When the gates are opened, the water flows through the penstock, and this potential energy is converted into kinetic energy as it gains speed. The high-velocity water strikes the blades of a turbine, causing it to spin.

This converts the water's kinetic energy into mechanical energy. The spinning turbine is directly connected to a generator. The generator converts mechanical energy into electrical energy. After passing through the turbine, the water is released back into the river, continuing the cycle.

Advantages and Disadvantages:

Advantages:

- Renewable Energy Source
- Low Greenhouse Gas Emissions
- Reliable Power Generation
- Energy Storage Capabilities
- Cost-Effective in the Long Run
- Supports Other Renewable Energy Sources
- Long Lifespan
- Provides Water for Other Uses
- Reduces Dependence on Fossil Fuels
- Creates Jobs and Boosts the Economy

Disadvantages:

- Environmental Impact of Dams
- Displacement of Communities
- High Initial Costs
- Limited Suitable Locations
- Dependence on Water Availability
- Risk of Catastrophic Failures
- Negative Effects on Aquatic Life
- Changes in Water Quality
- Flood Risks for Downstream Areas
- Sediment Buildup and Reduced Efficiency
- Impact on Groundwater Levels
- Limited Technological Advancements
- Geopolitical Conflicts Over Water Use

3.1.1.2 Nuclear power plant

Nuclear energy is a form of energy released from the nucleus, the core of atoms, made up of protons and neutrons. This source of energy can be produced in two ways:

fission – when nuclei of atoms split into several parts

fusion – when nuclei fuse together.

The schematic arrangement of nuclear power plant is shown in Fig. 3.4

The major components of nuclear power plants are as follows:

Nuclear Reactor: It is a main part of the nuclear power plantwhere nuclear fission occurs, releasing heat energy by splitting uranium atoms.

Heat exchanger: Transfers the heat generated in the reactor to water, turning it into steam.

Turbine: A device that uses the high-pressure steam to spin blades, generates mechanical energy.

Generator: Converts the mechanical energy from the turbine into electrical energy.

Condenser: Cools the steam back into water, allowing it to be recirculated through the system.

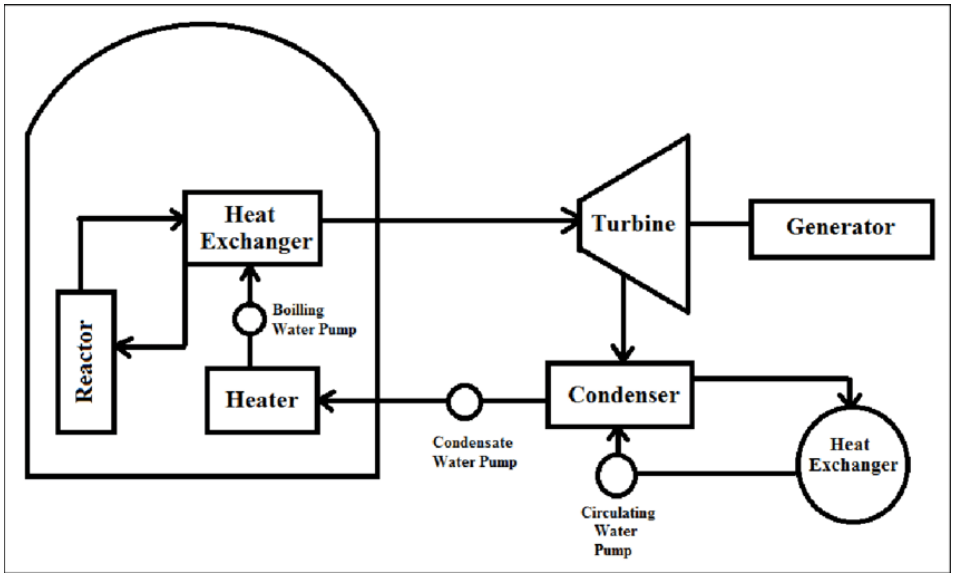

Fig. 3.4 Schematic arrangement of nuclear power plant

In a nuclear power station, Uranium is subjected to the fission process in the nuclear reactor. The heat energy produced is utilized for producing steam at high temperature. The steam is then moved to the steam turbine which produces mechanical energy at its output. The turbine is synchronized with the alternator (synchronous generator) which produces electricity at its output.

Advantages and Disadvantages:

Advantages:

- High Energy Density

- Low Greenhouse Gas Emissions
- Reliability
- Reduced Dependence on Fossil Fuels

Disadvantages:

- **Nuclear Waste Management**
- High Capital Costs
- **Risk of Nuclear Accidents – Explosions of Nuclear Power Plants**
- **Limited Uranium Resources**

3.1.3 Thermal power plant

Thermal energy can be obtained from the fossil fuels like coal, oil and natural gas. In general coal is used as a primary fuel in thermal power plant. The schematic arrangement of a thermal power plant is shown in Fig. 3.5.

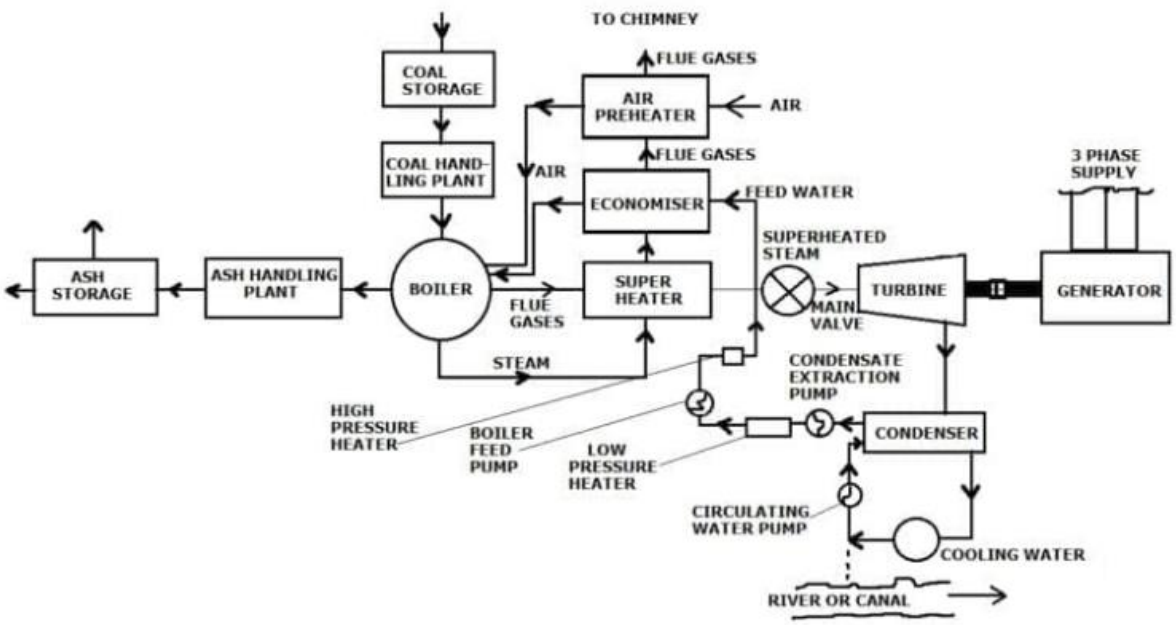

Fig. 3.5. Schematic arrangement of thermal power plant

The major components of a thermal power plant are as follows:

Coal handling unit: It receives, stores, and transports coal to the boiler.

Ash handling unit: It collects the ash left over after coal combustion.

Feed water heater: It uses steam extracted from the turbine to heat the water before it goes back into the boiler.

Super heater and reheater: Super heater take the steam from the boiler and further heats it to a high temperature, increasing its energy content. Reheater takes the steam after it has passed through the turbine and reheats it before it is sent back through a later stage of the turbine to extract more energy.

Boiler: The main component where coal is burned in a furnace. The heat from combustion boils water in tubes, producing high-pressure steam.

Turbine and Generator: The high-pressure steam from the superheater is directed to the turbine, causing its blades to rotates. This converts the steam's heat energy into mechanical energy.

Condenser: After passing through the turbine, the low-pressure steam is sent to the condenser.

Cooling Tower: Cools the hot water that has been used in the condenser to absorb heat from the steam.

Air pre heater: Uses the hot flue gases leaving the boiler to preheat the combustion air before it enters the boiler. Fossil fuels like coal is burned in a boiler. This process converts the chemical energy of the fuel into heat energy. The heat is used to create hot gases that heat the water in the boiler. Water is pumped into the boiler and is heated by the combustion gases. The heat converts the water into high-pressure, high-temperature steam. The steam is often superheated to further increase its temperature and energy. The high-pressure steam is directed onto the blades of a turbine, causing it to rotate at high speed. This step converts the steam's thermal energy into mechanical energy. The turbine is connected to a generator. As the turbine spins, it rotates the generator's shaft, which produces electricity through electromagnetic induction. The steam that has passed through the turbine is directed to a condenser. In the condenser, cooling water cools the steam back into liquid water. This condensed water is then pumped back to the boiler to be heated again, completing the closed-loop cycle.

Advantages And Disadvantages

Advantages:

- Less initial cost as compared to other generating stations.
- It requires less land as compared to hydro power plant.
- The fuel (i.e. coal) is cheaper.
- The cost of generation is lesser than that of diesel power plants.

Disadvantages:

- It pollutes the atmosphere due to the production of large amount of smoke. This is one of the causes of global warming.
- The overall efficiency of a thermal power station is low (less than 30%).
- Requires long time for e construction and put into action.
- Costlier in operating in comparison with that of Hydro and Nuclear power plants.
- Requirement of water in huge quantity.

3.1.2 Non-Conventional Energy sources

Non-conventional electric energy generation refers to the production of electricity from renewable, eco-friendly, and inexhaustible natural sources. These methods are often called clean energy or green power because they generate little to no pollution and are essential for reducing global warming. The non-conventional energy sources are vast in nature e.g., Solar energy, wind energy, tidal energy, biogas from biomass etc. It is also called as renewable energy sources. Power plants harness these energy sources and converts into electric energy.

3.1.2.1 Solar power plant

Solar energy is radiant energy from the sun that is converted into usable power, most commonly electricity, using photovoltaic (PV) cells and solar thermal systems. A solar PV power plant converts sunlight directly into electricity using solar panels, which contain PV cells made of semiconductor materials like silicon. Sunlight, composed of photons, strikes the semiconductor material in the solar cells within the panels. This energy releases electrons, creates a direct current (DC).An inverter then converts this DC into alternating current (AC), which can be used for consumption or sent to the grid. The schematic arrangement of solar PV power generation system is given in Fig. 3.6.

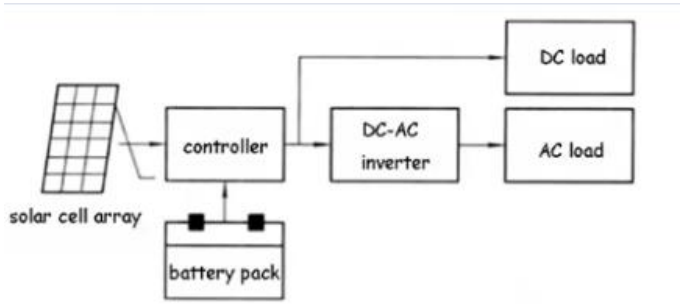

Fig. 3.6. Schematic arrangement of Solar power plant

The major components of PV power plant are as follows:

Solar Panels: These are made of photovoltaic cells that capture sunlight & generate direct current.

Inverters: Convert the generated direct current from the panels into usable alternating current.

Controller: Regulates the flow of electricity from solar panels to a battery to prevent overcharging and deep discharge, thereby protecting the battery and extending its lifespan.

The solar mirrors or parabolic collectors focus and concentrate sunlight onto a single point or line, which is a receiver. The intense solar energy heats a fluid, such as thermal oil, water, or molten salt, as it flows through the receiver. The hot fluid is used to boil water, creating high-pressure steam. In some systems, like those using molten salt, the heat is stored in a thermal tank first, which can then be used to produce steam later. The high-pressure steam expands and turns a turbine, converting thermal energy into mechanical energy. The turbine is connected to an electric generator. The rotating turbine causes the generator's rotor to rotate, and this mechanical energy is converted into electrical energy. The arrangement of solar thermal power plant is given in Fig. 3.7.

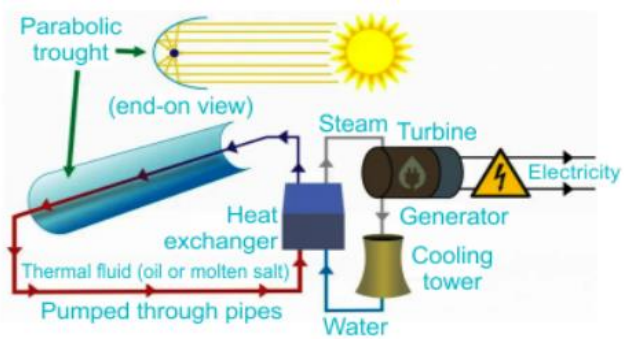

Fig. 3.7. Solar thermal power plant.

The main components of solar thermal power plant are as follows:

Solar collectors: The mirrors that reflect and concentrate sunlight onto a single point. There are two main types i.e., heliostats and parabolic troughs.

Receiver: A device that absorbs the concentrated sunlight and uses the energy to heat a fluid.

Heat-transfer fluid: A fluid, such as thermal oil, water, or molten salt, that circulates through the receiver, absorbs the heat, and transports it to other parts of the plant.

Steam generator: The heat from the fluid is used to boil water and create high-pressure steam.

Turbine and generator: The high-pressure steam rotates a turbine, which is connected to a generator. The generator converts this mechanical energy into electricity.

Condenser and pump: After passing through the turbine, the steam is cooled and condensed back into water in a condenser. The water is then pumped back to the steam generator to repeat the cycle.

Advantages and Disadvantages:

Advantages:

- Solar energy is a renewable energy source and reduces carbon emissions
- Solar energy can reduce your home's electricity bill
- Solar power can get you money back through solar renewable energy credits (SRECs)
- Homes with solar panels installed may improve home value
- Solar panels have low maintenance costs
- Solar energy can generate electricity in any climate
- You can store solar energy to be used during peak hours
- Solar energy can be sold back to the grid
- Solar energy is getting increasingly more affordable

Disadvantages:

- The high initial costs of installing panels
- Solar energy storage is expensive
- Solar doesn't work for every roof type
- Solar panels are dependent on sunlight
- Production of panels and batteries can be harmful to the environment

3.1.2.2 Wind power plant

The kinetic energy of wind is harnessed to generate electricity using turbines. Wind turbines generally require a minimum wind speed of 12–14 km/h (about 3.5–4 m/s) to start generating electricity. When wind blows, it pushes against the blades of a wind turbine. The force of the wind creates lift and causes the blades to rotate. Fig. 3.8 shows the various parts of a wind power plant. The major components are as follows:

1. Wind turbine or rotor.
2. Wind mill head –it houses speed increaser, drive shaft, clutch, coupling etc.
3. Electric generator.
4. Supporting structure.

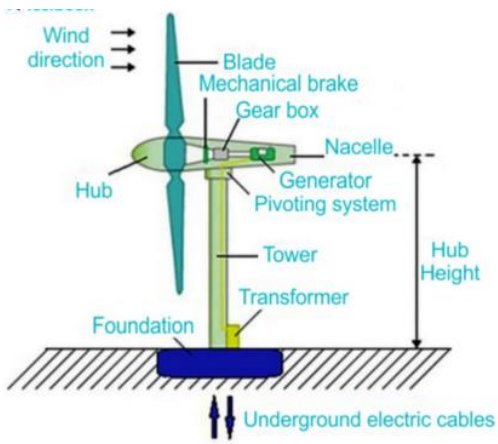

Fig. 3.8. wind power plant

The most important component is the rotor. For an effective utilization, all components should be properly designed and matched with the rest of the components. The wind mill head performs the following functions:

(i) It supports the rotor housing and the rotor bearings.

(ii)It also houses any control mechanism incorporated like changing the pitch of the blades for safety devices and tail vane to orient the rotor to face the wind, the latter is facilitated by mounting it on the top of the supporting structure on suitable bearings.

The wind turbine may be located either unwind or downwind of the power. In the unwind location the wind encounters the turbine before reaching the tower. Downwind rotors are generally preferred especially for the large aerogenerators.

The supporting structure is designed to withstand the wind load during gusts. Its type and height is related to cost and transmission system incorporated. Horizontal axis wind turbines are mounted on towers so as to be above the level of turbulence and other ground related effects.

Advantages and Disadvantages:

Advantages:

- Wind is a type of clean energy
- Wind is a renewable energy source
- Wind power has a low operating cost
- Wind turbines save space
- Wind power generation promotes domestic economic growth

Disadvantages:

- Wind turbines can be dangerous to some wildlife

- Wind turbines can be noisy
- Wind power is limited by location

3.1.2.3 Tidal power plants

Tide or wave is periodic rise and fall of water level of the sea. Tides occur due to the attraction of sea water by the moon. Tides contain large amount of potential energy which is used for power generation. When the water is above the mean sea level, it is called flood tide. When the water level is below the mean level it is called ebb tide.

The arrangement of the high tide and low tide system is shown in Fig. 3.9.

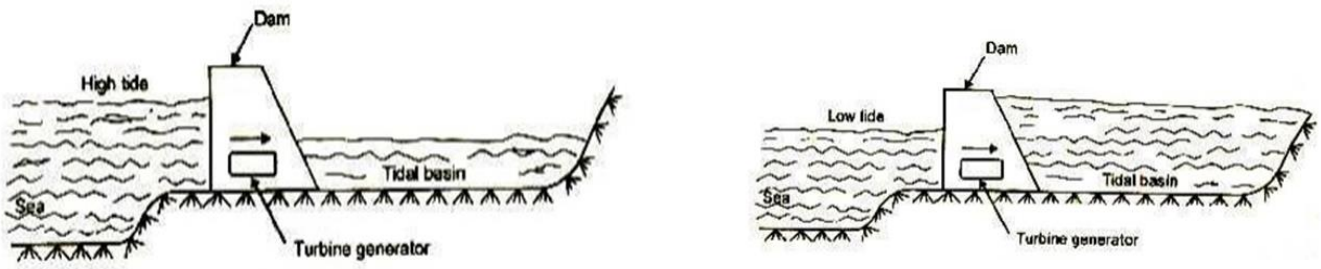

Fig. 3.9. High and low tide system.

The ocean tides rise and fall and water can be stored during the rise period and it can be discharged during fall. A dam is constructed separating the tidal basin from the sea and a difference in water level is obtained between the basin and sea.

During high tide period, water flows from the sea into the tidal basin through the water turbine. The height of tide is above that of tidal basin. Hence the turbine unit operates and generates power, as it is directly coupled to a generator.

During low tide period, water flows from tidal basin to sea, as the water level in the basin is more than that of the tide in the sea. During this period also, the flowing water rotates the turbine and generator power.

Advantages and Disadvantages:

Advantages:

- Tidal energy is a predictable and consistent source of energy.
- Tidal energy production has minimal environmental impact compared to traditional fossil fuel-based power generation.
- It has a high energy density, meaning that it can generate a large amount of electricity from a relatively small area.

- It is more readily available and scalable renewable energy option.

Disadvantages

- Its construction is very expensive.
- It takes a lot of time and skilled people to maintain as well as repair its equipment.
- Tidal Energy also leads to habitat change and other environmental issues.
- It does not provide the amount of energy that is required as high tides are only present for 10 hours a day.
- Tidal Energy also requires a high storage capacity.
- It also has adverse effects on marine life.
- It also has very limited locations where it can be built.

3.3 Current Indian Scenario - Comparison between conventional and non-conventional electricity generation

Courtesy: India's Energy Landscape, Powering Growth with Sustainable Energy, Government of India

- India's total installed power capacity reached 476 GW as of June 2025.
- Power shortages dropped from 4.2% in 2013–14 to 0.1% in 2024–25.
- Over 2.8 crore households were electrified, per capita electricity consumption increased by 45.8%.
- Non-fossil fuel sources now contribute 235.7 GW (49%) of total capacity, including 226.9 GW renewable and 8.8 GW nuclear.
- Thermal power remains dominant, accounting for 240 GW or 50.52% of installed capacity.
- Total installed capacity has grown from 305 gigawatts (GW) in 2015–16 to a projected 475 GW in 2024–25.

India's power sector is among the most diversified in the world, with generation from conventional sources like coal, gas, hydro, and nuclear, as well as renewable sources such as solar, wind, biomass, and small hydro. With rising electricity demand, India continues to expand its energy capacity to support economic growth and sustainability goals.

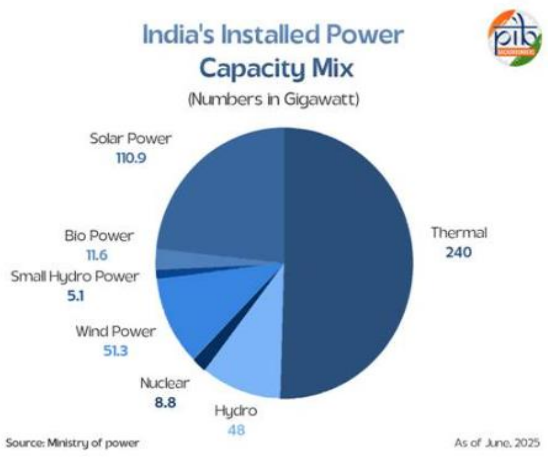

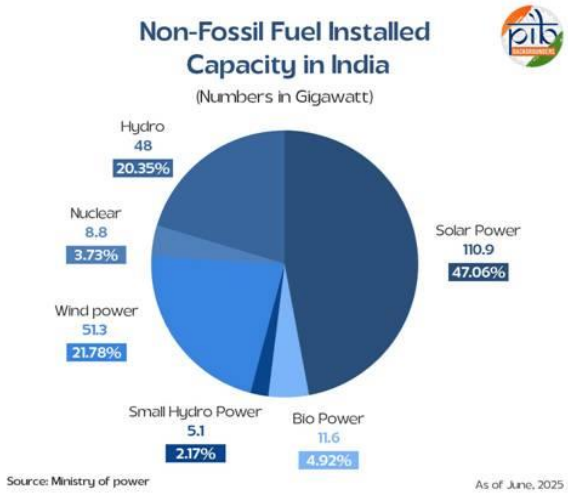

- Expansion in Renewable Energy Capacity:

  Installed RE capacity has grown from 76.37 GW in March 2014 to 226.79 GW in June 2025, an increase of nearly 3 times.

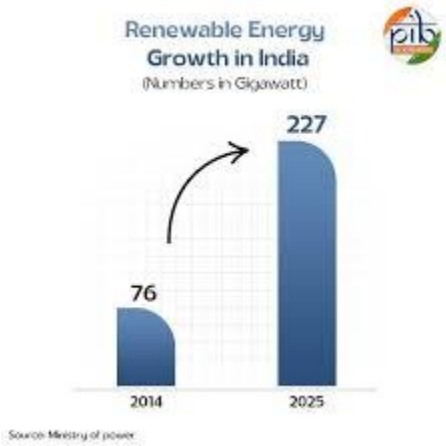

3.4 Transmission System Overview (HVAC & HVDC)

High voltage AC (HVAC)transmission uses alternating current and is cost-effective for shorter distances, utilizing transformers to easily step voltage up or down. High Voltage DC (HVDC) transmission uses direct current and is more efficient for very long distances (more than500 kms) or submarine/underground cables due to lower losses and requiring fewer conductors and less insulation. The HVAC transmission system has a voltage level of 220kV, 400kV and 765kV.

The advantages of HVAC transmission system are as follows:

- Reduced line current
- Reduction in power loss

- Reduced conductor volume
- Decrease in voltage drop & Improved voltage regulation
- Increased power handling capacity
- Greater transmission efficiency
- Number of circuits and land requirements reduces.
- The total line cost per MW per km decreases with increase in line voltage.
- The operation with AC system is easy and can be adopted easily.
- The equipment's used in HVAC are simple and reliable without need of high Technology.
- The lines can be easily tapped and extended with simple control of power flow in the network.

The disadvantages of HVAC transmission system are as follows:

- Corona loss and Radio interference
- Line supports
- Erection Difficulties
- Insulation needs
- Cost of transformer, switchgear equipment's and protective equipment's increases.
- HV lines generates electrostatic effects.

HVDC Transmission

High voltage direct current (HVDC) power systems use D.C. for transmission of bulk power over long distances. For long-distance power transmission, HVDC lines are less expensive, and losses are less as compared to AC transmission. It interconnects the networks that have different frequencies and characteristics.

HVDC systems use converter stations (rectifiers and inverters) to convert AC to DC for transmission and back to AC for consumption, offering lower losses and better control than HVAC for distances exceeding 600 km. In generating substation, AC power is generated which can be converted into DC by using a rectifier. In HVDC substation or converter substation rectifiers and inverters are placed at both the ends of a line. The rectifier terminal changes the AC to DC, while the inverter terminal converts DC to AC. The block diagram of HVDC transmission system is shown in Fig 3.10

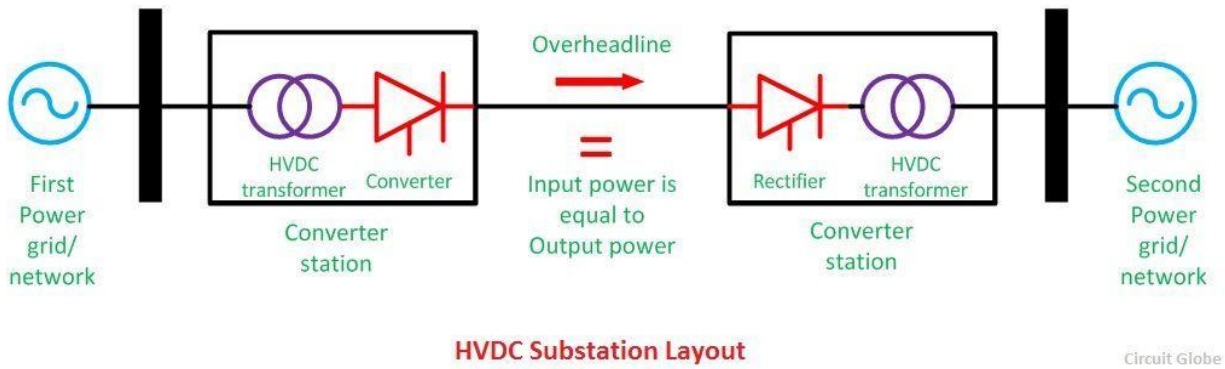

Fig 3.10 HVDC transmission system

The advantages of HVDC transmission system are as follows:

- Economical for bulk transmission of power
- No Stability problem
- Skin effect is low
- Greater power transmission per conductor
- Less corona loss
- With HVDC link there is easy reversibility and controllability of power flow

The disadvantages of HVDC transmission system are as follows:

- HVDC is not economical if length of transmission is less than 500km
- With multi terminal DC C.B is difficult and expensive
- Generation of Harmonics
- Overload Capacity of HVDC converter is low
- Maintenance of insulators in HVDC system is more
- Requirement of cooling system

3.5 Transmission Voltage Levels (Low, Medium, High, Extra High Voltage)

3.5.1 Low voltage AC transmission

- Less than or equal to 250 V (India)
- Range (ANSI/USA): 240 V to 600 V
- Applications: Residential and small commercial loads
- Characteristics: Safer; used in household wiring and appliances

3.5.2 Medium voltage AC transmission

- Range (India): > 250 V and ≤ 650 V
- Range (ANSI/USA): 2.4 kV to 69 kV

- Applications: Industrial facilities, local distribution networks
- Characteristics: Requires specialized insulation and protection; not safe for direct contact

3.5.3 EHV -AC transmission (400kV to 765kV)

Advantages

- Reduced line current
- Reduction in losses
- Increase in transmission efficiency
- Reduction in conductor volume
- Reduced capital cost
- Significant reduction in cost per kW of transmission
- Economical to interconnect the power system on a large scale
- Number of circuits and land requirement decreases

Disadvantages

- Corona & radio interference
- Difficulty in erection
- Electrostatic effects harmful to humans and animals
- Insulation problems

3.5.4 Overview of power distribution primary &secondary distribution, distribution voltage levels (415V, 230V)

Primary distribution systems operate at medium voltages (typically 11–33 kV) to deliver power from substations to local transformers, while secondary distribution systems operate at low voltages (typically 415/230 V) to supply electricity directly to consumers. The electric energy is supplied to consumers through a distribution system. A distribution system can be subdivided into three distinct parts: feeders, distributor and service mains.

The voltage level of a primary distribution system is higher than the utilization voltage level. In most cases, the primary distribution system deals with the voltage level is in the range of 3.3 kV, 6.6 kV, and 11 kV.

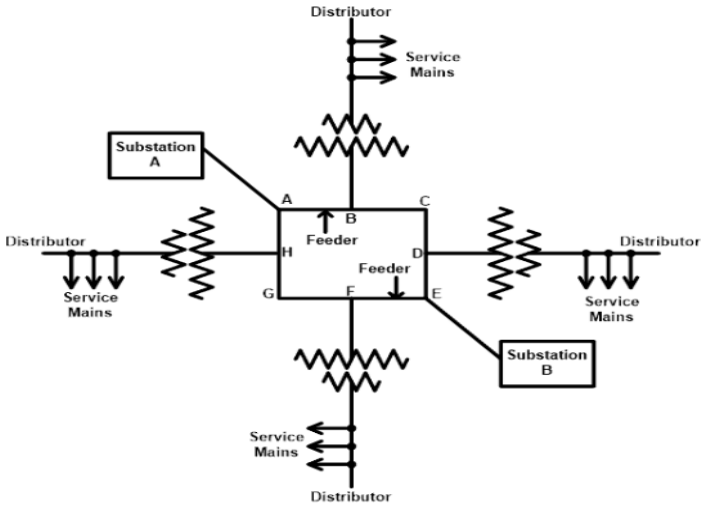

Fig.3.11 Primary distribution system.

The primary distribution system supplies power to large consumers like industries or large commercial complexes, etc. The voltage level is stepped down at the utilization level by a step-down transformer. This transformer is placed near to the consumer premises. The typical arrangement of a primary distribution system is as shown in the Fig. 3.11..In a secondary distribution system, the power is distributed at the utilization level. The primary distribution system ends with a transformer that is used to convert 11 kV to 415 V. And this power is directly distributed to the small consumers. The arrangement for the secondary distribution network is shown in the Fig. 3.12.

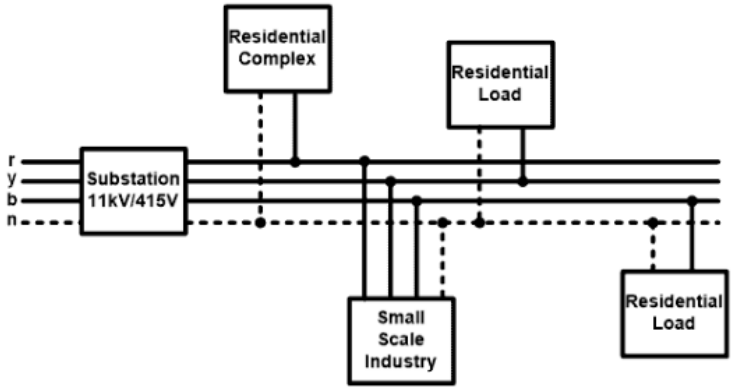

Fig. 3.12. Secondary distribution system.

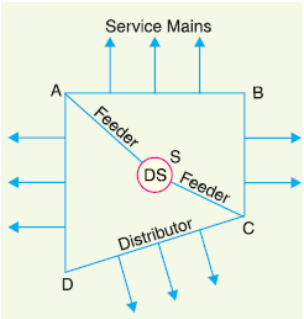

Fig. 3.13. The feeders, distributors and service mains.

The arrangement for the feeders. Distributors and service mains are as shown in Fig 3.13. Feeders are the conductors, which are of large current carrying capacity. The Feeders connect the substation to the area, where power is to be finally distributed to the consumers. Distributors are the conductors used to transfer power from distribution center to consumers. Service mains are the small cables between distributors and the actual consumer premises.