UNIT - 4	9 Hours
Introduction to DC-DC Conversion	
Working principle and application of Buck Converter, Boost Converter, Uninterruptible Power Supply (UPS)- Block Diagram & Working	
Electric Vehicles (EV)	
Fundamentals, Block diagram of EV and its components, Motors used in EV	

Introduction to DC to DC Converters:

DC-DC converters are essential electronic circuits that play a critical role in modern power management systems. Their primary function is to convert the voltage of a direct current (DC) source from one level to another, ensuring stable and efficient power delivery to various electronic devices and systems. In applications where input voltage levels can fluctuate due to factors such as battery discharging over time or changes in load conditions, DC-DC converters maintain a constant output voltage, providing reliable power to the system's components. One significant advantage of DC-DC converters is their superior power conversion efficiency. By using switching techniques, they can minimize power losses associated with resistive elements, such as transformers or linear regulators, which typically generate heat and waste energy. This results in better overall efficiency and prolonged battery life in portable devices. Moreover, DC-DC converters offer the flexibility to step up or down voltage levels, allowing for efficient power distribution management in electronic systems. They can also provide galvanic isolation, separating the input and output grounds to reduce the risk of ground loops and safeguard sensitive components from voltage spikes and noise.

Another feature of DC-DC converters is their precise voltage regulation. Some converters can maintain output voltage accuracy within a narrow range, typically with less than a 1% deviation. This level of precision is vital for ensuring the proper operation of electronic devices and systems that require stable power supplies.

DC-DC converters come in various topologies and configurations, catering to a broad range of applications and power requirements. They can be designed as standalone devices, integrated into larger power management systems, or embedded into individual components, such as microprocessors or microcontrollers.

4.1 Types of DC-DC converters:

1.Buck converter or Step-down converter

2.Boost converter or Step-up converter

4.1.1. Buck converter:

It is a power electronic circuit that convert an input DC voltage to a **low** output DC voltage level. The buck converter circuit is as shown in the Fig.4.1. It consists of an input DC voltage, a power electronic switch, a diode, an inductor, a capacitor and a load resistance.

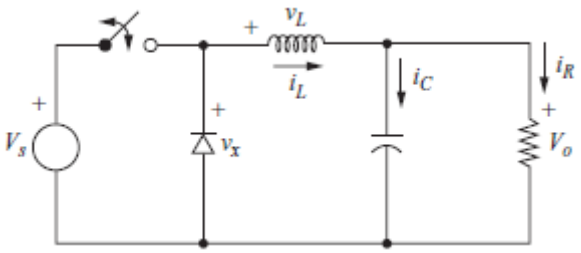

Fig.4.1: Buck converter

Working Principle of the Buck converter:

A buck converter works by switching a DC input voltage on and off, storing energy in an inductor during the "on" phase and releasing it during the "off" phase, smoothing the output with a capacitor to produce a lower, regulated DC voltage.

Analysis for the Switch Closed:

When the switch is closed in the buck converter circuit of Fig. 4.2, the diode is reverse-biased and Fig. 4.2 is an equivalent circuit.

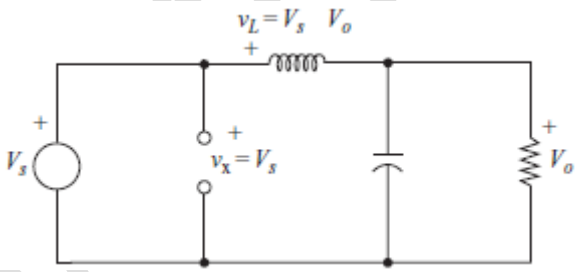

Fig. 4.2: Equivalent circuit for the switch closed

Analysis for the Switch Open:

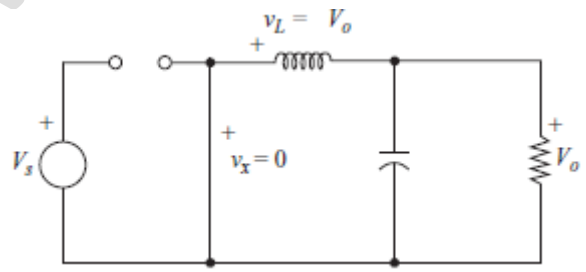

Fig. 4.3: Equivalent circuit for the switch open

When the switch is open, the diode becomes forward-biased to carry the inductor current and the equivalent circuit of Fig. 4.3 applies.

The relationship between input voltage-Vs and output voltage-V_0 is given by:

$V_0 = DV_s$

Where,

D=Duty ratio. Its range is between, 0 to 1

$$D = \frac{T_{on}}{T}$$

Ton=’on’ time of the switch

T=Total time for 1 cycle of the gate signal

$T=T_{on}+T_{off}$

T_{off}=’off’ time of the switch

Inductance can be calculated using the formula:

$$L=\frac{(1-D)R}{2f}$$

Capacitance can be calculated using the formula:

$$C=\frac{(1-D)}{8L(\frac{\Delta V_0}{V_0})f^2}$$

Application of buck converter:

Buck converters are used for smartphones, laptops, battery chargers, solar systems, LED lighting, and automotive electronics

4.1.2. Boost converter:

It is a power electronic circuit that convert an input DC voltage to a high output DC voltage level. The boost converter circuit is as shown in the Fig.4.4. It consists of an input DC voltage, a power electronic switch, a diode, an inductor, a capacitor and a load resistance.

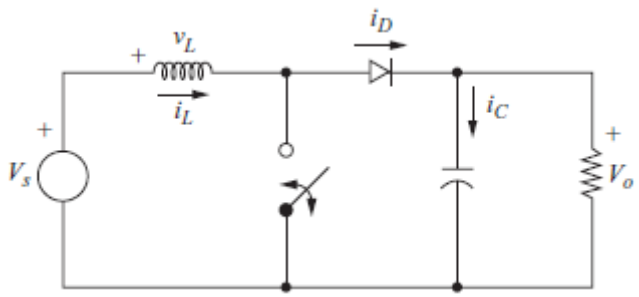

Fig.4.4: Boost converter

Working Principle of the Buck converter:

A boost converter works by switching a DC input voltage on and off, storing energy in an inductor during the "on" phase and releasing it during the "off" phase, smoothing the output with a capacitor to produce a higher, regulated DC voltage.

Analysis for the Switch Closed:

When the switch is closed in the boost converter circuit of Fig. 4.5, the diode is reverse-biased and Fig. 4.5 is an equivalent circuit.

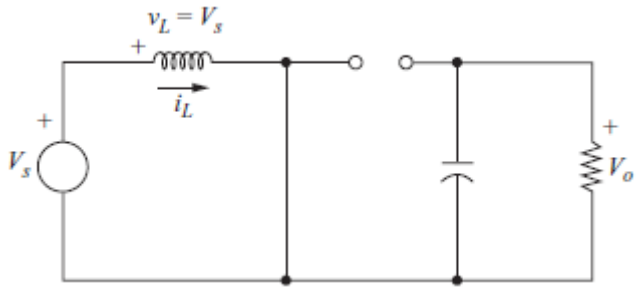

Fig. 4.5: Equivalent circuit for the switch closed

Analysis for the Switch Open:

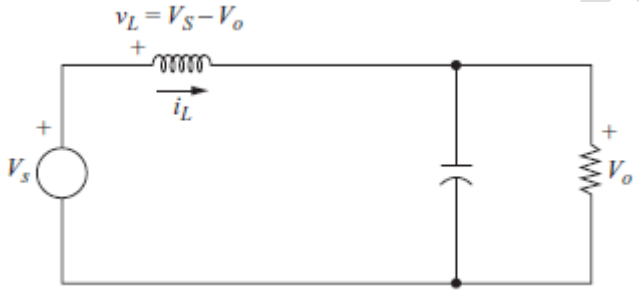

Fig. 4.6: Equivalent circuit for the switch open

When the switch is open, the diode becomes forward-biased to carry the inductor current and the equivalent circuit of Fig. 4.6 applies.

The relationship between input voltage-Vs and output voltage-V_0 is given by:

$$V_0 = \frac{V_s}{1 - D}$$

Where, D=Duty ratio. Its range is between, 0 to 1

$$D = \frac{T_{on}}{T}$$

Ton='on' time of the switch

T=Total time for 1 cycle of the gate signal

$T=T_{on}+T_{off}$

T_{off}='off' time of the switch

Inductance can be calculated using the formula:

$L=\frac{V_S D}{\Delta I_L f}$

Where: $\Delta I_L = Ripple\ inductor\ current$

Capacitance can be calculated using the formula:

$C=\frac{D}{R\left(\frac{\Delta V_0}{V_0}\right)f}$ Where: $\Delta V_0 = Ripple\ capacitor\ voltage$

Application of boost converter:

Boost converters are used for smartphones, laptops, battery chargers, solar systems, LED lighting, and automotive electronics

4.2 Uninterruptible Power Supply (UPS):

UPS stands for **Uninterruptible Power Supply**. An Uninterruptible Power Supply (UPS) is an electrical device used to provide emergency electrical power to different electrical loads in the case of a main power supply failure. A UPS or uninterruptible power supply uses batteries and supercapacitors to store electrical energy and delivers this stored electrical energy when the main input power supply fails. However, a typical UPS battery can supply electrical power for a short duration. Hence, UPSs are mostly used as short run time backup power sources for small loads.

In addition to supplying emergency electrical power to the loads, a UPS also protects sensitive equipment such as computers, data centers, TV sets, industrial process control and monitoring systems, and many other electronic devices.

A UPS is commonly used with computers that keep running a computer for a short time, about 15 to 30 minutes, after the failure of supply mains. Therefore, it prevents the sudden turn off of the computer and loss of data in the system, and other system failures. These days, there are several types of UPS systems available in the market. Some smart UPS systems are also available that come with software components that enables us to automate the switching function of the backup supply when we are away from the computer system.

Major Parts of an UPS

Following are the main components of a UPS system:

- **Battery**: The battery works as the energy storage unit in the UPS system. It provides the stored electrical energy for a sufficient amount of time during main power failure.
- **Rectifier or Charger Circuit**: It converts the supply voltage of 240 VAC into 12 V (or any other battery voltage) DC. It supplies this rectified DC power to the battery for storage.
- **Inverter**: It converts the DC output power of the battery into ac power to supply the load during mains power failure.
- **Static Switch**: It is a semiconductor device such as a thyristor which transfers the load from the utility to the inverter (and the inverter to the utility) without any interruption in the power supply to the load.

4.21 Off-Line UPS

The Off-Line UPS is also known as Standby UPS. This type of UPS system gives only the most basic features. In the case of off-line UPS, the system will start operating only when there is a power failure in the supply mains. The block diagram of the off-line UPS is shown in Fig.4.7.

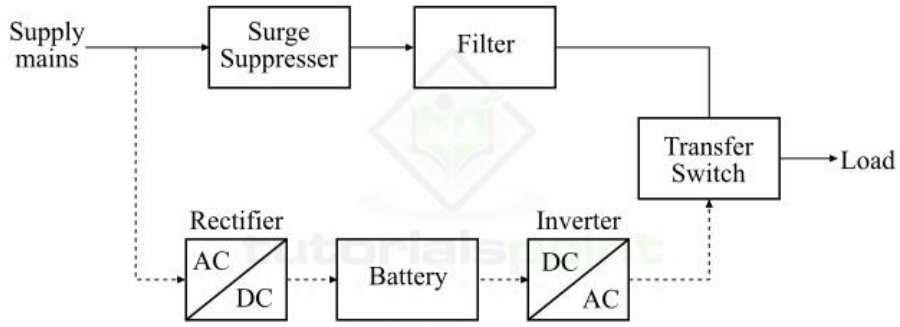

Fig.4.7: Block diagram of OFF line UPS

In an off-line UPS system, the ac power from the supply mains is first converted into DC power using a rectifier circuit and then stored in the battery connected to the output port of the rectifier. When, there is any power failure that occurs in the supply mains, the dc power of the battery is converted into ac power using a power inverter and is then transferred to the load connected to the ups system. The off-line ups systems provide surge protection in addition to the emergency power. These are the least expensive UPS systems available in the market.

4.22 On-Line UPS

The On-Line UPS system uses a double conversion method. That means, in this UPS system, the input AC power is first converted into DC power by a rectifier to charge the UPS battery, and then this DC power is converted back into AC power by a power inverter to power the load equipment. Therefore, the On-Line UPS systems are commonly used in such systems where electrical isolation is required between the input and output. The block diagram of a typical On-Line UPS system is shown in Figure-4.8.

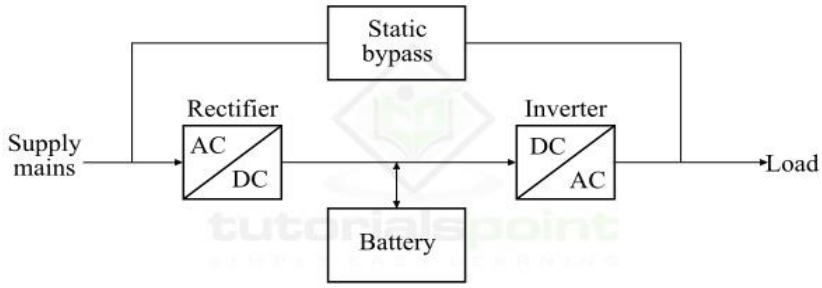

Fig.4.8: Block diagram of OFF line UPS

In this system, the rectifier circuit receives ac power from the supply mains and directly drives the inverter circuit. Thus, it involves two simultaneous conversion processes and is hence referred to as a Double Conversion UPS System.

In the case of supply mains power failure, the rectifier circuit becomes inactive and the DC power stored in the battery is converted into AC by the inverter and supplied to the load. Once the mains power is restored, the rectifier circuit again starts charging the battery. A current limiting mechanism is also provided in the system to protect the battery from overheating. Although, on-line ups systems are slightly expensive due to their design and components used.

4.3 Electric Vehicles (EV)

4.31 Fundamentals of EV:

Electric vehicles (EVs) operate by using electricity stored in high-capacity battery packs to power electric motors, eliminating tailpipe emissions and reducing maintenance compared to internal combustion engines. Key components include the lithium-ion battery, motor, inverter, and controller, which together provide instant torque and efficient energy conversion

4.32 Block diagram:

Electric vehicle is an umbrella term that includes all types of electricity-powered vehicles, such as two-wheelers, three-wheelers, cars, buses, trucks, and more.

The basic block diagram of an electric car is shown in the Fig.4.9

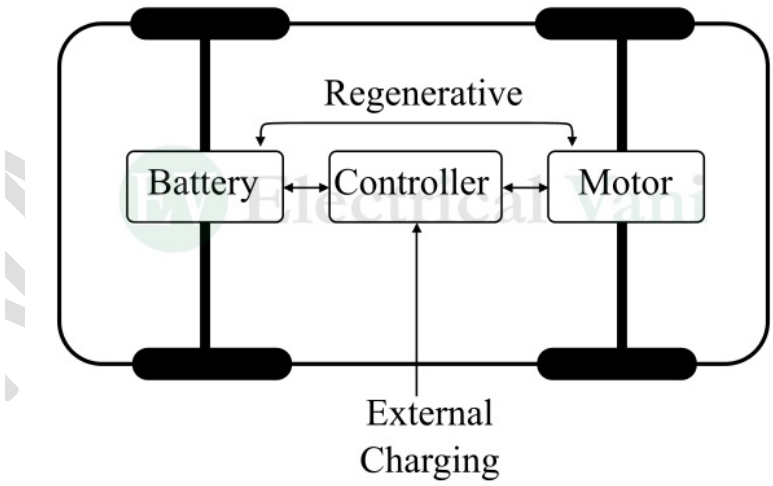

Fig.4.9: Block diagram of EV

The complete working of an electric car is explained below:

- When we start the car and press the car pedal, electrical energy starts flowing from batteries to electric motors.

- The pressure applied on the car pedal sends signals to the electronic controller. Then, the controller regulates the electrical energy supplied to the motors.
- Electric motors convert the electrical energy into rotational mechanical energy at a certain speed depending on the amount of electrical energy supplied.
- The electric motor then rotates the transmission system and wheels of the car and moves it.

4.33 Core Components and Systems

i)Battery Pack (Energy Storage): The heart of the EV, storing DC electricity in lithium-ion cells.

ii)Electric Motor: Converts electricity into mechanical energy to propel the vehicle, often acting as a generator for regenerative braking

iii)Inverter: Converts DC power from the battery into AC power for the motor, controlling speed and torque.

iv)Drivetrain: Transmits power from the motor to the wheels, typically using a single-speed transmission.

v)Battery Management System (BMS): Manages battery health, monitoring voltage, temperature, and charge levels.

vi)On Board Charger or DC to DC Converter: Converts AC grid power to DC for charging and steps down high voltage for accessory power.

4.34 Operational Principles

i)Acceleration: Pressing the pedal sends a signal to the controller/inverter, which draws energy from the battery to turn the motor.

ii)Regenerative Braking: During deceleration, the motor acts as a generator, slowing the car and converting kinetic energy back into electricity to recharge the battery.

iii)Charging: EVs use Level 1 (slow), Level 2 (fast), or DC Fast Charging to replenish the battery.

4.35 Key Advantages and Challenges

Advantages: Zero tailpipe emissions, higher energy efficiency, lower operating costs, and instant acceleration.

Challenges: Higher initial purchase price, range anxiety, longer refuelling times, and the need for widespread charging infrastructure.

Types of Electric Vehicles:

i)Battery EVs Run entirely on electricity.

ii)Plug-in EVs: Use batteries for limited electric range and a gas engine for longer trips.

4.36 Motors used in EVs:

Electric vehicles (EVs) primarily use AC motors. They are

i)Permanent Magnet Synchronous Motors (PMSM)

ii)AC Induction Motors (ACIM)

iii)Brushless DC Motors (BLDC)

Comparative Study of EV Motors

Feature	PMSM (Permanent Magnet Synchronous)	BLDC (Brushless DC)	SRM (Switched Reluctance)
Efficiency	Highest (90%+)	High	Moderate to High
Power Density	Highest	High	Moderate
Cost	High (due to rare-earth magnets)	Low to Moderate	Lowest
Torque Ripple	Low (Smooth)	Moderate (Higher)	High
Control	Complex (Sinusoidal)	Simple (Trapezoidal)	Complex
Noise/Vibration	Low	Moderate	High (Acoustic noise)
Ideal Use Case	Premium EVs, High Performance	Budget EVs, Scooters	Heavy Duty, Low-Cost EV

*****