وزارة التعليم
Ministry of Education

جامعة المستقبل
Mustaqbal University

Kingdom of Saudi Arabia

Ministry of Education

College of Engineering and Computer Sciences

The smart Emergency Vehicle

Students:

Sultanah Al Mutairi	441002082
Amal Al Anzy	441003562
Sara Al Sultan	432003802

Supervisor:

Dr. Radia Ahmed Touahrir

A MTP report submitted to MTP Committee in partial fulfillment of the requirements for the course

Embedded System

[COE304]

Computer Engineering Department

Mustaqbal University - Saudi Arabia
1446 H
(2024 – 2025)

ACKNOWLEDGMENTS

With great appreciation and gratitude, we would like to thank Dr. Radia Touahri for her support and continuous guidance throughout the project. She has been an inspiration and a role model in dedication and creativity, and her advice played a key role in overcoming many challenges.

Sultanah Al Mutairi

Amal Al Anzy

Sara Al Sultan

ABSTRACT

The main objective of this project is to design and develop a wireless gold detection vehicle that enables safe and efficient exploration in hazardous mining environments. The vehicle aims to assist in detecting gold in hard-to-reach areas while minimizing human exposure to dangerous conditions. Equipped with a custom-built gold detection circuit, the system uses a hand-wound copper coil to generate electromagnetic fields and detect changes caused by conductive metals like gold, triggering alerts through a buzzer and LED indicators. The vehicle operates remotely via Bluetooth communication, enhancing both safety and flexibility. To complete this project, several design, programming, and manufacturing tools were used: Arduino Uno and Arduino Nano boards for motor and sensor control, the JDY-16 Bluetooth module for wireless operation, and the LightBlue Explorer app for sending real-time commands from an iPhone. The mechanical structure was built on a 4WD LAFVIN car chassis, powered by lithium batteries, with the sensor circuit assembled on a breadboard using resistors, capacitors, and diodes to improve signal and system stability. The main result of this project is a fully functional remote-controlled gold detection vehicle capable of identifying metallic objects underground and alerting users effectively, providing a safer, more efficient solution for modern exploration needs.

LIST OF TABLES

Table 1: Similar Project Overview.....3
Table 2: Present and Desired State of the project. 5

LIST OF FIGURES

Figure 1: An image showing Garrett ACE 300. 2
Figure 2: An illustrative image of the Satellite-Based system. 2
Figure 3: Arduino software (IDE). 6
Figure 4: Light-Blue Explorer App. 7
Figure 5: Arduino Uno R3. 8
Figure 6: Bluetooth Module HC-05. 9
Figure 7: Car Body. 10
Figure 8: Lithium Battery. 10
Figure 9: Arduino Nano 11
Figure 10: Breadboard. 12
Figure 11: Resistor. 13
Figure 12: Ceramic Capacitor (100nf). 14
Figure 13: Copper Wire. 14
Figure 14: Buzzer. 15
Figure 15: Soldering Iron. 16
Figure 16: Diode Rectifier. 17
Figure 17:Gold Detection Vehicle Control Flowchart 18
Figure 18:Gold Detection Circuit Diagram 19
Figure 19:Vehicle Motor Wiring and Assembly Diagram 19
Figure 20: The Vehicle. 20
Figure 21: User Interference App. 23
Figure 22: Gold Detector Circuit Implementation. 24
Figure 23: Diode placement for current regulation and circuit protection. 27
Figure 24: Text-based control commands for Vehicle movement. 28
Figure 25: Circuit Test. 29
Figure 26: Vehicle Test. 30
Figure 27: Complete system assembly. 30
Figure 28: PCB design attempt. 32
Figure 29: Paper test for printing. 32
Figure 30: Breadboard circuit assembly. 33
Figure 31: Gold detector circuit. 34

TABLE OF CONTENTS

ACKNOWLEDGMENTS II
ABSTRACT III
LIST OF TABLES IV
LIST OF FIGURES V
TABLE OF CONTENTS VI
Chapter 1 1
1.1 Description of the Project 1
1.1.1 Integration of Autonomous Robotics in Mineral Exploration 1
1.2 Overview of some Related Projects 2
1.2.1 Project 1: Garrett ACE 300 2
1.2.2 Project 2: Satellite-Based System 2
1.3 Objectives 3
1.4 Problem Definitions 4
1.4.1 Present and Desired States of the Project 5
Chapter 2 6
2.1 Software 6
2.1.1 Arduino IDE 6
2.1.2 Light-Blue Explorer App 7
2.2 Tools 8
2.2.1 Vehicle Hardware 8
2.2.2 Gold Detection Hardware 11
2.3 Methodology 18
Chapter 3 19
3.1 Project Design 19
3.2 Project Implementation 20
3.2.1 Vehicle Assembly 20
3.2.2 Gold Detector Implementation 23
3.3 Problems encountered during design and implementation 26
3.3.1 Excessive Current and Damage to Gold Detection Circuit Components 26
3.3.2 Challenges in Using a Control Application on the iPhone 27
Chapter 4 29
4.1 Project Testing 29
4.1.1 Step 1: Gold Detection Circuit Testing 29
4.1.2 Step 2: Vehicle System Testing 29

4.2 Project Prototype and Results 30
4.3 Discussion on Project Results 31
4.3.1 Bluetooth-Based Vehicle Control via iPhone 31
4.3.2 Safe and Remote Exploration 31
4.3.3 Gold Detection Using Electromagnetic Response 31
4.4 Problems and Challenges Faced During Project 31
4.4.1 PCB Printing Issues 31
4.4.2 Issues Related to the Type of Paper Used for Printing 32
4.4.3 Circuit Complexity and the Large Number of Components 33
4.4.4 Challenges in the Design of the Circuit Schematic 33

Chapter 1

Introduction

To detect gold locations using the wireless vehicle, it is important to define the problem and clarify the project objectives.

In this chapter, the problem definition has been explained in detail, along with a description of similar projects and objectives.

1.1 Description of the Project

The main objective of this project is to design and develop a self-driving vehicle for gold detection in mining environments. The vehicle functions as a mobile system equipped with a precise metal detection sensor and a wireless Bluetooth control system, allowing it to be operated remotely in hazardous areas without direct human intervention.

The system was developed using Arduino boards, with embedded programming to control motor movements and receive remote navigation commands. All components are mounted on a lightweight 4WD acrylic chassis to ensure flexibility and mobility in rough terrains. The outcome is a vehicle capable of detecting metals remotely, enhancing exploration efficiency while reducing human exposure to dangerous mining environments.

1.1.1 Integration of Autonomous Robotics in Mineral Exploration

The integration of autonomous vehicles in gold exploration is changing traditional methods of detecting valuable minerals. By combining embedded systems, wireless control, and specialized metal detection sensors, self-driving platforms can perform exploration tasks with improved safety and efficiency. The vehicle in this project operates through Bluetooth-based remote control and continuously scans the ground for metallic signals, providing real-time feedback. Such systems not only enhance detection capabilities but also reduce the risks and costs associated with manual exploration. The use of mobile robotic systems in mining represents an important step toward modernizing exploration technologies. [1]

1.2 Overview of some Related Projects

1.2.1 Project 1: Garrett ACE 300

Figure 1: An image showing Garrett ACE 300.

1.2.2 Project 2: Satellite-Based System

Figure 2: An illustrative image of the Satellite-Based system.

Table 1: Similar Project Overview.

No.	Criteria	Garrett ACE 300 [2]	Satellite-Based System [3]
1	Design	Traditional metal detector with a long shaft and a circular coil at the bottom. Controlled via a small handheld unit [2].	Advanced system relying on satellites equipped with multispectral sensors and high-resolution cameras to scan vast areas [3].
2	Ease of use	Easy to use, requiring minimal training to understand audio and visual signals.	Complex and requires a team of experts to operate the system and analyze collected data.
3	Cost	Low - $300	Very high - reaching millions of dollars, typically used by large mining companies.
4	Accuracy	Detects metals at depths of 1 to 3 feet, with some potential for errors.	Very high accuracy (90%+), capable of precisely identifying gold deposits over large areas.
5	Technology	Uses VLF (Very Low Frequency) technology to detect metals underground.	Relies on satellites, multispectral sensors, and AI algorithms for data analysis.

1.3 Objectives

1. Design and implement an efficient and cost-effective system for gold exploration, reducing operational expenses while enhancing detection capabilities.
2. Develop and offer a remote-controlled vehicle that ensures safe and secure access to hard-to-reach areas, minimizing human risk and expanding exploration possibilities.
3. Establish and integrate autonomous navigation capabilities for the vehicle to automatically detect gold-rich areas, improving efficiency and reducing the need for manual intervention.

1.4 Problem Definitions

Gold detection and extraction are integral to the global economy, with gold mining operations spanning various regions and employing numerous individuals. However, traditional gold detection and mining methods present significant challenges, particularly concerning human health risks, environmental degradation, and operational inefficiencies.

Artisanal and small-scale gold mining (ASGM) often involve the use of mercury to extract gold, leading to severe health hazards. In regions like Colombia, artisanal miners contribute to the highest per capita mercury pollution globally, with annual emissions reaching up to 150 tons. This exposure is associated with adverse effects on the reproductive and immune systems, as well as an increased risk of cardiovascular diseases and premature death [3], [4].

A study in Burkina Faso involving 93 gold workers revealed that nearly half reported experiencing multiple symptoms potentially related to mercury exposure, including frequent headaches, sleep disorders, and dizziness [5].

Beyond health concerns, traditional gold mining methods contribute to environmental degradation. In Tanzania, for instance, it is estimated that approximately 1.32 kg of mercury is lost to the environment for every 1 kg of gold mined. This unregulated use leads to significant mercury contamination in soil and water, affecting both the ecosystem and human populations [7].

The global market for metal detectors, including those used for gold detection, is experiencing significant growth. Projections indicate that the market will expand from USD 0.84 billion in 2024 to USD 1.71 billion by 2033, reflecting a compound annual growth rate (CAGR) of 8.2% [8]. Similarly, the digital metal detector market is expected to grow from USD 0.76 billion in 2023 to USD 1.57 billion by 2032, at a CAGR of 8.4% [9].

Therefore, the problem addressed in this project can be summarized as: to design and implement a gold detector integrated into a wireless vehicle that can be remotely controlled. This vehicle will allow for detection of remote gold in unsafe areas, reducing human exposure to potential hazards while ensuring the discretion of the operation. The system will enable efficient and precise gold detection in challenging environments, helping to maintain the confidentiality and safety of gold exploration.

1.4.1 Present and Desired States of the Project

Table 2: Present and Desired State of the project.

Present State	Desired State
Gold detection is often manual and time-consuming.	To have a wireless vehicle that can detect gold in unsafe locations remotely, saving time and improving efficiency.
Traditional methods of gold detection require human presence in dangerous areas.	To implement a remote-controlled vehicle that operates safely in hazardous environments, reducing human exposure to danger.

Chapter 2

Methodology and Tools

To effectively implement the gold detection system using wireless vehicles, it's important to identify the hardware, devices, and software needed.

In this chapter, we have detailed and explained the necessary hardware and software requirements to achieve our goal and develop this project. Additionally, we will discuss the methods that will be used to implement the project effectively.

2.1 Software

2.1.1 Arduino IDE

2.1.1.1 Description of Arduino IDE

The Arduino Integrated Development Environment - or Arduino Software (IDE) - contains a text editor for writing code, a message area, a text console, a toolbar with buttons for common functions and a series of menus. It connects to the Arduino hardware to upload programs and communicate with them. [10]

Figure 3: Arduino software (IDE).

2.1.1.2 What is Arduino used for?

In this project, the Arduino IDE was used to write and upload code that enables the vehicle to detect gold. The code defines how data is read from the sensors (such as the metal detection coil), interprets the readings, and activates the buzzer or LEDs when gold is detected. It also includes logic for controlling the motors and receiving commands via Bluetooth for remote navigation. [10]

Once the code is written, the IDE compiles it into a machine-readable format compatible with the Arduino Uno and Arduino Nano boards used in the system. This ensures the hardware components perform the intended actions accurately and efficiently.[10]

2.1.1.3 Why was Arduino IDE chosen?

Arduino IDE was chosen because it is simple, free, and supports both Arduino Uno and Nano. It allows easy coding and uploading, making it ideal for integrating sensors, motors, and communication modules used in the gold detection vehicle. [10]

2.1.2 Light-Blue Explorer App

2.1.2.1 Description of LightBlue Explorer

LightBlue Explorer is a mobile app that allows users to connect with Bluetooth Low Energy (BLE) devices. It provides a simple interface for sending and receiving data to BLE modules like JDY-16. The app works on iPhones and supports real-time command input using text. [11]

Figure 4: Light-Blue Explorer App

2.1.2.2 What is LightBlue Explorer used for?

In this project, LightBlue Explorer was used to send control commands (e.g., 'F', 'B', 'L', 'R', 'S') to robots via Bluetooth. These commands controlled the car's movement and allowed real-time testing and remote operation using an iPhone. [11]

2.1.2.3 Why was LightBlue Explorer chosen?

LightBlue Explorer was chosen because it works well on iOS devices and supports BLE communication. It provided a simple way to control the robot from an iPhone without needing an Android device or extra hardware. [11]

2.2 Tools

2.2.1 Vehicle Hardware

2.2.1.1 Arduino Uno R3

2.2.1.1.1 Description of Arduino Uno R3

A microcontroller board based on the ATmega328P chip, widely used in electronics projects. It also supports various communication protocols like UART, SPI, and I2C, which make it highly versatile for integrating multiple sensors and modules [12].

Figure 5: Arduino Uno R3.

2.2.1.1.2 What is Arduino Uno R3 used for?

Acts as the main processing unit, controlling all connected components like motors, Bluetooth modules, and power systems. It processes real-time commands from the remote operator, adjusts motor speeds via PWM signals, and coordinates data transmission between subsystems while ensuring stable operation in rugged mining environments. Why Arduino Uno R3 was chosen.[12]

2.2.1.1.3 Why was Arduino Uno R3 chosen?

It is easy to program, compatible with many components, and provides a sufficient number of I/O ports for simultaneous motor control, Bluetooth communication, and sensor management. Its widespread community support and reliability in low-voltage applications (7–12V input) make it ideal for mobile robotic systems requiring precise real-time control [12].

2.2.1.2 Bluetooth

2.2.1.2.1 Description of Bluetooth

A wireless communication module (HC-05) based on Bluetooth 2.0 technology, operating at 2.4 GHz frequency with a typical range of 10 meters. It supports serial communication (UART protocol) and operates at 3.3–5V logic levels, making it compatible with Arduino boards. [13]

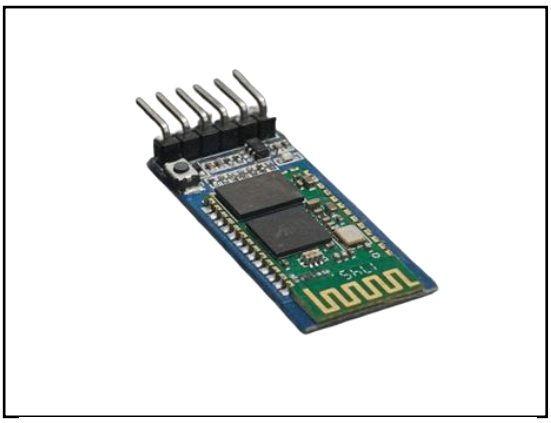

Figure 6: Bluetooth Module HC-05.

2.2.1.2.2 What is Bluetooth used for?

Bluetooth is used to establish wireless communication between the vehicle and a remote operator, enabling real-time control via a custom Android app. Commands such as forward, reverse, left, and right are transmitted to the Arduino Uno, which translates them into motor movements.[13]

2.2.1.2.3 Why was Bluetooth chosen?

Bluetooth was chosen for its low power consumption (≤ 30 mA during operation), minimal latency (< 100 ms), and compatibility with the Arduino ecosystem. The HC-05 module simplifies pairing with smartphones, requires no additional infrastructure (like Wi-Fi routers), and ensures reliable communication in mining environments where wired control is impractical [13].

2.2.1.3 Car Body

2.2.1.3.1 2.2.1.3.1 Description of LAFVIN Car Body

The LAFVIN car body is a 4-wheel-drive (4WD) robotic chassis constructed from laser-cut acrylic panels, pre-drilled with mounting holes for motors, sensors, and control boards. It includes integrated slots for DC gear motors (e.g., A1: Left Front Motor, B2: Right Rear Motor). [14]

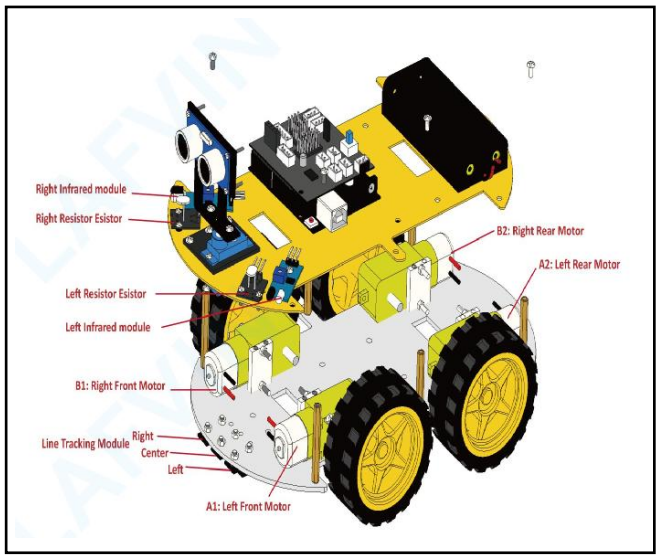

Figure 7: Car Body.

2.2.1.3.2 <u>What is LAFVIN Car Body used for?</u>

The chassis serves as the structural foundation for the vehicle, organizing and securing all components, including motors, wheels, sensors, and control systems. [14]

2.2.1.3.3 <u>Why was LAFVIN Car Body chosen?</u>

The LAFVIN chassis was selected for its pre-assembled design, which simplifies mechanical integration, and its compatibility with Arduino-based projects. The built-in motor mounts and sensor slots reduce assembly time, while the durable acrylic material ensures lightweight yet robust performance in mining environments. [14]

2.2.1.4 <u>Lithium Battery</u>

2.2.1.4.1 <u>Description of Lithium Battery</u>

Rechargeable batteries provide power to portable devices. It provides a stable voltage output and can be recharged hundreds of times, making it suitable for long-term use [15].

Figure 8: Lithium Battery.

2.2.1.4.2 What is Lithium Battery used for?

Serves as the main power source for the system, providing the necessary energy to operate motors, sensors, and control units. Its lightweight and compact size make it ideal for mobile applications, robotics, or autonomous systems that require energy efficiency and portability.[15]

2.2.1.4.3 Why was Lithium Battery chosen?

Lithium batteries were chosen for their high energy density (150–200 Wh/kg), which maximizes runtime for the vehicle's motors and sensors during prolonged gold detection missions. Their lightweight design reduces overall system weight, enhancing mobility in rugged mining terrain. [15]

2.2.2 Gold Detection Hardware

2.2.2.1 Arduino Nano

2.2.2.1.1 Description of Arduino Nano

A compact version of the Arduino board with similar functionality. It is ideal for compact projects and can be powered via USB or external power source with built-in voltage regulation [16].

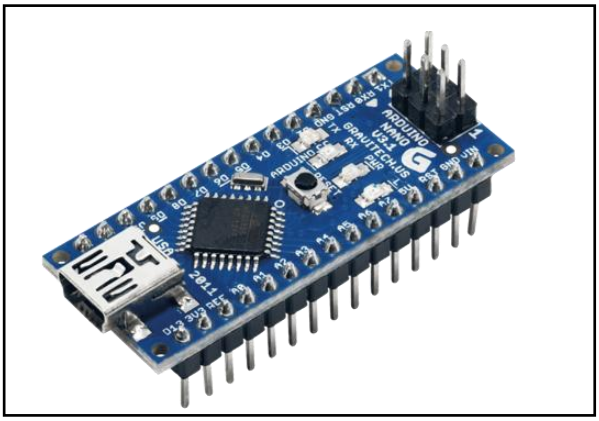

Figure 9: Arduino Nano

2.2.2.1.2 What is Arduino Nano used for?

The Arduino Nano processes real-time data from the gold detection sensor, executing custom algorithms to distinguish gold signatures from other metals based on conductivity and signal frequency. It triggers alerts (via buzzer/LED) upon detection and communicates detection status to the main vehicle controller (Arduino Uno) for coordinated navigation to target locations.[16]

2.2.2.1.3 Why was Arduino Nano chosen?

The Nano was chosen for its 8 analog input pins, which enable precise sampling of analog signals from the gold sensor, and its compact size (18.5 × 43 mm), allowing seamless integration into the detection module's tight space. [16]

2.2.2.2 Breadboard

2.2.2.2.1 Description of Breadboard

The breadboard is a plastic board used to assemble and test electronic circuits without the need for soldering. It contains organized holes that allow easy connection of components and wires, and it's widely used for experiments and testing before finalizing a permanent circuit [17].

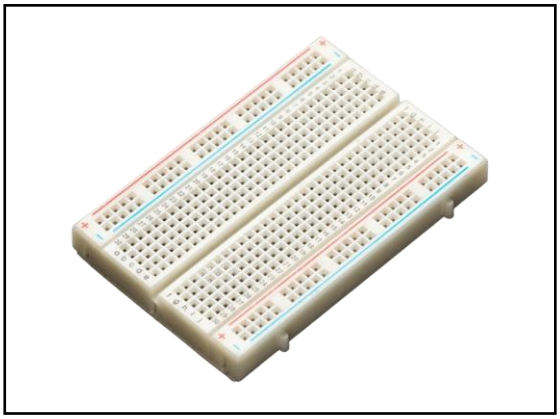

Figure 10: Breadboard.

2.2.2.2.2 What is Breadboard used for?

A breadboard is used for building and testing electronic circuits. It is an important tool for experimenting with ideas and designing prototypes before creating a final version. It is also widely used in electronics education, as it makes it easy to connect and modify components, helping learners to understand and analyze how circuits work in a simple and practical way. [17]

2.2.2.2.3 Why was Breadboard chosen?

The breadboard allows for quick and flexible prototyping of electronic circuits without soldering. It is cost-effective and reusable, enabling easy modification and testing of circuits, making it ideal for experimentation and learning. [17]

2.2.2.3 Resistor

2.2.2.3.1 Description of Resistor

A passive electrical component that resists the flow of current. They are available in various resistance values, allowing precise control over current flow in different parts of the circuit [18].

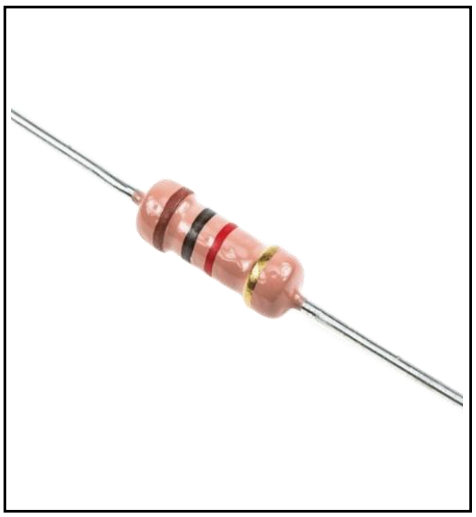

Figure 11: Resistor.

2.2.2.3.2 What is Resistor used for?

Resistors are used to calibrate the sensitivity of the gold detection circuit, such as limiting current to the metal detector coil to prevent overheating and forming voltage dividers for analog signal conditioning. [18]

2.2.2.3.3 Why was Resistor chosen?

Resistors were chosen for their precision in controlling current flow (e.g., 220Ω resistors for LED indicators, 10kΩ pull-up resistors for I2C communication) and their ability to stabilize analog signals from the gold sensor. [18]

2.2.2.4 Ceramic Capacitor

2.2.2.5 Description of Ceramic Capacitor

A capacitor that stores and releases electrical energy. It is commonly used for decoupling and bypassing to reduce high-frequency noise in power supply lines [19]

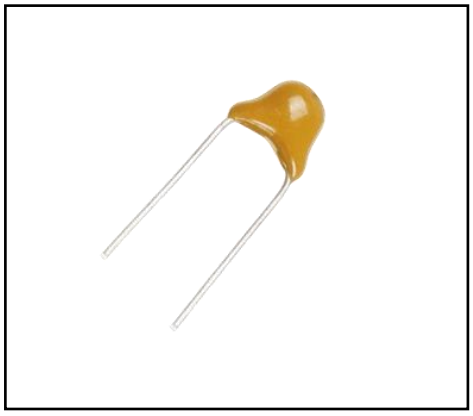

Figure 12: Ceramic Capacitor (100nf).

2.2.2.5.1 What is Ceramic Capacitor used for?

The 100nF ceramic capacitor is used to stabilize voltage levels in the gold detection circuit, filtering high-frequency noise from the sensor's signal and suppressing voltage spikes caused by rapid switching of the metal detector coil.[19]

2.2.2.5.2 Why was Ceramic Capacitor chosen?

The 100nF ceramic capacitor was chosen for its excellent high-frequency noise suppression (up to 1 MHz), compact size, and stability across temperature variations in mining environments. [19]

2.2.2.6 Copper Wire

2.2.2.6.1 Description of Copper Wire

Conductive wire made of copper, widely used in electromagnetic coil windings due to its excellent conductivity (5.96×10^7 S/m) and mechanical strength [20].

Figure 13: Copper Wire.

2.2.2.6.2 What is Copper Wire used for?

Copper wire is used to construct the gold detector's search coil, generating an electromagnetic field to identify buried metals. It also interconnects high-current components (e.g., transistors, power regulators) in the detection circuit, ensuring minimal signal loss and robust conductivity.[20]

2.2.2.6.3 Why was Copper Wire chosen?

Copper wire was chosen for its low electrical resistance (0.0171 $\Omega \cdot mm^2/m$), which maximizes current efficiency in the detector coil, and its high tensile strength (200–300 MPa), ensuring durability in abrasive mining environments. [20]

2.2.2.7 Buzzer

2.2.2.7.1 Description of Buzzer

A sound-producing device, either active (with built-in oscillator) or passive (requires external signal), used to generate audible alerts. The selected active buzzer operates at 5V DC, producing a 2.5 kHz tone at 85 dB, ensuring clear audio feedback even in noisy mining environments [21].

Figure 14: Buzzer.

2.2.2.7.2 What is Buzzer used for?

The buzzer provides immediate audio alerts upon gold detection, triggered by the Arduino Nano when the sensor identifies a metallic target matching gold's conductivity profile. It also signals system errors (e.g., low battery, sensor malfunctions) to the operator, ensuring real-time awareness without relying on visual indicators.[21]

2.2.2.7.3 Why was Buzzer chosen?

The active buzzer was chosen for its low power consumption (≤ 30 mA), compatibility with the Arduino Nano's 5V output pins, and high sound output (85 dB), which remains audible in loud outdoor mining areas. [21]

2.2.2.8 Soldering Iron

2.2.2.8.1 Description of Soldering Iron

A hand tool with a heated metal tip (adjustable 200–450°C) used to melt solder, creating permanent electrical and mechanical connections between components. The selected 60W soldering iron features a ceramic heating element and interchangeable tips for precision work on small circuits like the gold detector's signal-processing board [22].

Figure 15: Soldering Iron.

2.2.2.8.2 What is Soldering Iron used for?

The soldering iron is used to assemble and reinforce critical connections in the gold detection system, including securing the Arduino Nano, resistors, and capacitors to the PCB, attaching the metal detector coil's copper wire leads to the amplifier circuit, and reinforcing high-current joints (e.g., transistor terminals, power rails) to ensure durability in rugged mining environments.[22]

2.2.2.8.3 Why was Soldering Iron chosen?

A temperature-controlled soldering iron was chosen for its ability to handle lead-free solder alloys (melting point: 217–227°C), ensuring durable connections resistant to vibration in rugged mining environments. [22]

2.2.2.9 Diode

2.2.2.9.1 Description of Diode

The 1N4007 is a general-purpose rectifier diode designed for high-voltage applications, with a peak reverse voltage (PIV) of 1000V and a forward current rating of 1A. Encased in a DO-41 package, it features a silicon PN junction for reliable AC-to-DC conversion and reverse polarity protection in low-frequency circuits [23].

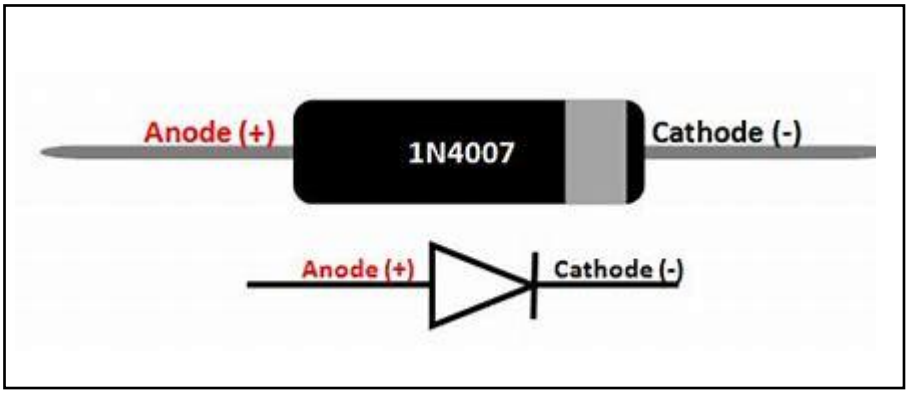

Figure 16: Diode Rectifier.

2.2.2.9.2 What is Diode 1N4007 used for?

The 1N4007 diode is used to protect the gold detection circuit from reverse voltage spikes generated by inductive loads such as motors and the metal detector coil, ensuring components like the Arduino Nano remain undamaged during abrupt power disconnections. [23]

2.2.2.9.3 Why Diode 1N4007 was chosen?

1N4007 was selected for its high reverse voltage tolerance (1000V), which ensures robust protection against voltage surges in mining environments. Its low forward voltage drop (1V) minimizes power loss, while the rugged DO-41 package provides durability against mechanical stress and temperature fluctuations. [23]

2.3 Methodology

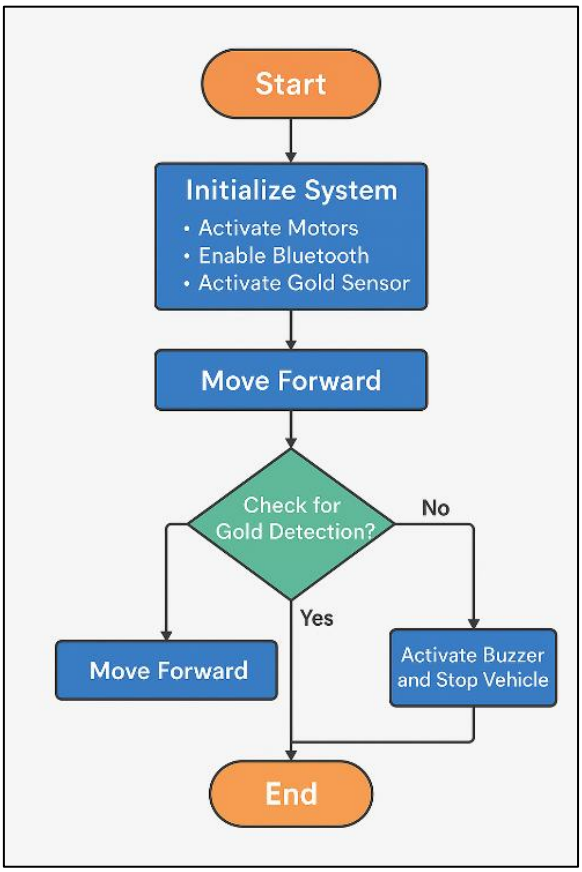

Figure 17:Gold Detection Vehicle Control Flowchart

The system operation begins with a comprehensive initialization phase, which includes activating the motors, establishing Bluetooth communication, and enabling the gold detection sensor. Following initialization, the vehicle autonomously moves forward while continuously scanning for gold.

The system repeatedly checks for the presence of gold during movement.
If gold is detected, the vehicle immediately triggers an audible alarm (buzzer) and halts to accurately mark the detection site.

If no gold is detected, the vehicle continues moving forward, repeating the detection process. The system operates in this loop until one of two conditions is met: either gold is detected, or a manual stop command is received via Bluetooth.This sequence ensures efficient gold detection, optimizes operational safety, and minimizes the need for direct human intervention.

Chapter 3

System Design & Implementation

3.1 Project Design

In this project a wireless robotic vehicle was designed and developed to support the gold detection system. The project design includes hardware selection, electronic circuit integration, and mechanical assembly to ensure stability, efficiency, and remote-control capability.

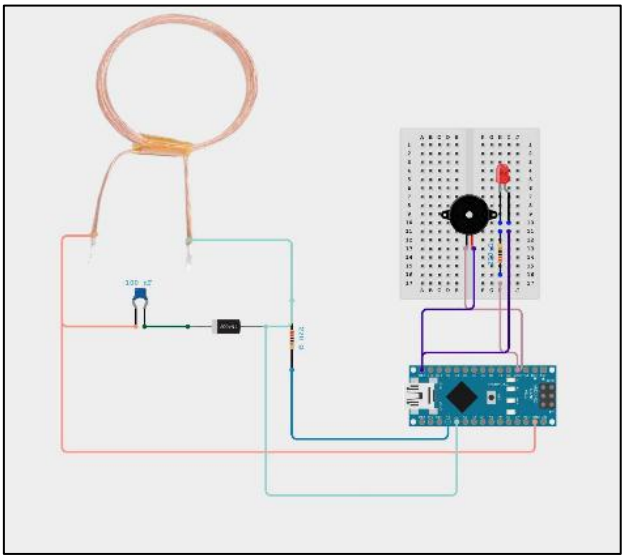

Figure 18:Gold Detection Circuit Diagram

The figure above shows the schematic connection of the gold detection circuit, including the copper coil, Arduino Nano, buzzer, LED, and basic filtering components.

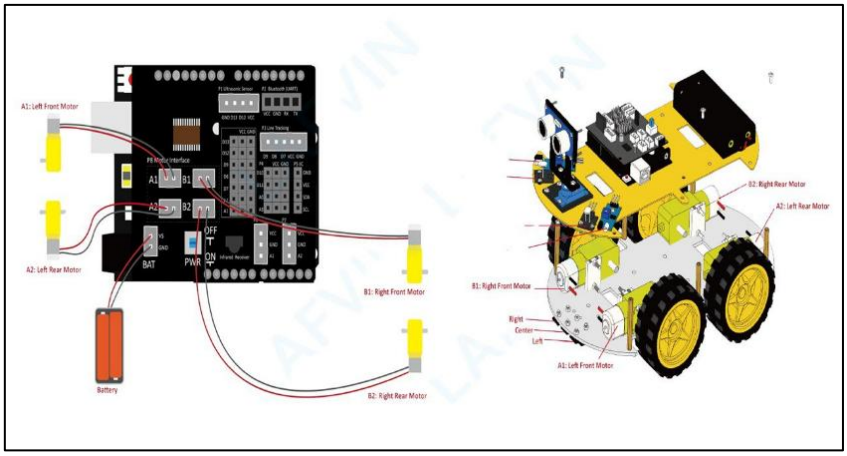

Figure 19:Vehicle Motor Wiring and Assembly Diagram

The figure above shows the motor connection to the control board and the full mechanical structure of the vehicle, including the mounting of sensors and motors.

3.2 Project Implementation

The implementation phase involved assembling the hardware components, integrating software algorithms, and rigorously testing the system to ensure seamless operation in real-world mining environments.

3.2.1 Vehicle Assembly

The physical assembly of the gold detection vehicle began with the LAFVIN 4WD acrylic chassis, which provided a lightweight yet sturdy foundation for mounting critical components. Four DC gear motors were secured to the chassis's pre-drilled slots, each connected to rubber-tread wheels for improved traction on uneven terrain. The Arduino Uno R3, acting as the central processing unit, was mounted near the rear of the chassis alongside the L298N motor driver, which translated PWM signals into precise motor control.

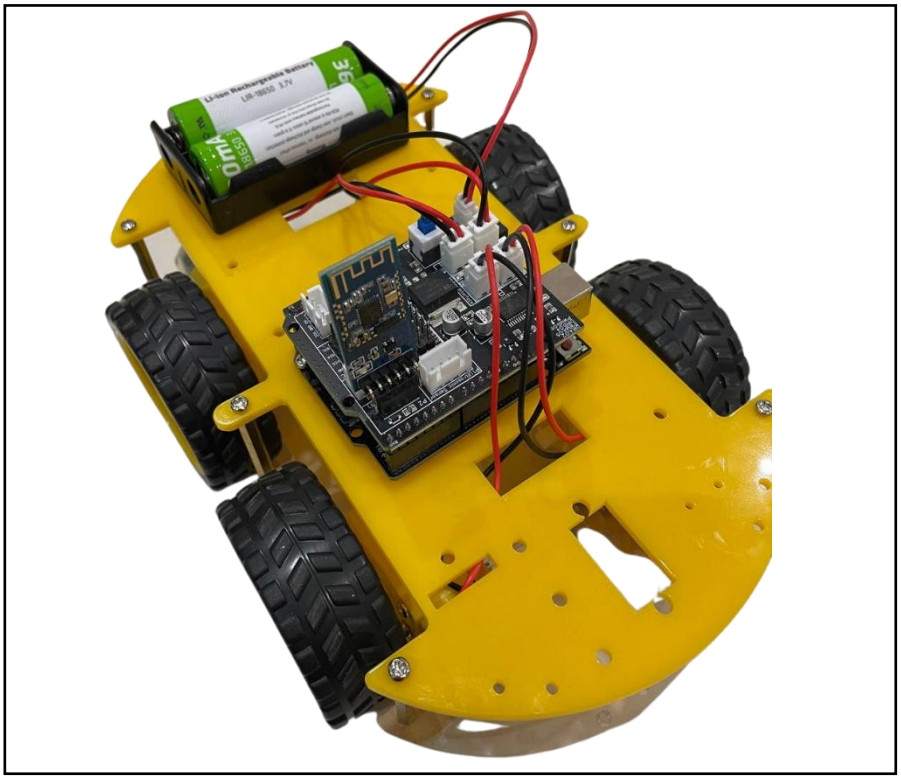

Figure 20: The Vehicle.

This Arduino code below enables wireless control of the vehicle's motors using Bluetooth Low Energy (BLE) commands sent from the LightBlue Explorer app. The code interprets single-character inputs ('F', 'B', 'L', 'R', 'S') to execute corresponding movements:

3.2.1.1 Motor Configuration

- Two motor ports (A and B) control the left and right wheels.
- Direction pins (dirA, dirB) set forward/reverse rotation.
- PWM pins (pwmA, pwmB) regulate motor speed (0–255).

3.2.1.2 Key Functions

- moveForward() / moveBackward(): Sets opposing directions for left and right motors to drive straight.
- turnLeft() / turnRight(): Spins wheels in opposite directions for pivoting turns.
- stopMotors(): Halts all motion by disabling PWM signals.

3.2.1.3 Bluetooth Integration

- The JDY-16 BLE module transmits commands via serial UART at 9600 baud.

3.2.1.4 Speed Notes

- PWM values (150 for turns, 200 for linear motion) balance speed and maneuverability.

3.2.1.5 The code source

```
#define dirA 2
#define pwmA 5

#define dirB 4
#define pwmB 6

char cmdChar = 0;

void setup() {
  Serial.begin(9600);
  pinMode(dirA, OUTPUT);
  pinMode(pwmA, OUTPUT);
  pinMode(dirB, OUTPUT);
  pinMode(pwmB, OUTPUT);
  stopMotors();
}

void loop() {
  if (Serial.available()) {
```

```
    cmdChar = Serial.read();
    switch (cmdChar) {
      case 'F': moveForward();  break;
      case 'B': moveBackward(); break;
      case 'L': turnLeft();     break;
      case 'R': turnRight();    break;
      case 'S': stopMotors();   break;
      default:                  break;
    }
  }
}

void moveForward() {
  digitalWrite(dirA, HIGH);
  analogWrite(pwmA, 200);
  digitalWrite(dirB, LOW);
  analogWrite(pwmB, 200);
}

void moveBackward() {
  digitalWrite(dirA, LOW);
  analogWrite(pwmA, 200);
  digitalWrite(dirB, HIGH);
  analogWrite(pwmB, 200);
}

void turnLeft() {

  digitalWrite(dirA, LOW);
  analogWrite(pwmA, 150);
  digitalWrite(dirB, LOW);
  analogWrite(pwmB, 150);
}

void turnRight() {

  digitalWrite(dirA, HIGH);
  analogWrite(pwmA, 150);
  digitalWrite(dirB, HIGH);
  analogWrite(pwmB, 150);
}

void stopMotors() {
  analogWrite(pwmA, 0);
  analogWrite(pwmB, 0);
}
```

3.2.1.6 LightBlue Explorer app

The JDY-16 Bluetooth module was installed to enable wireless communication between the vehicle and a remote operator. This module facilitated real-time control commands (e.g., ‘F’ for forward, ‘L’ for left, ‘S’ for stop) transmitted via the LightBlue Explorer app. The module’s compact design allowed it to be mounted discreetly on the chassis, with wiring routed to the Arduino Uno’s serial pins for seamless integration.

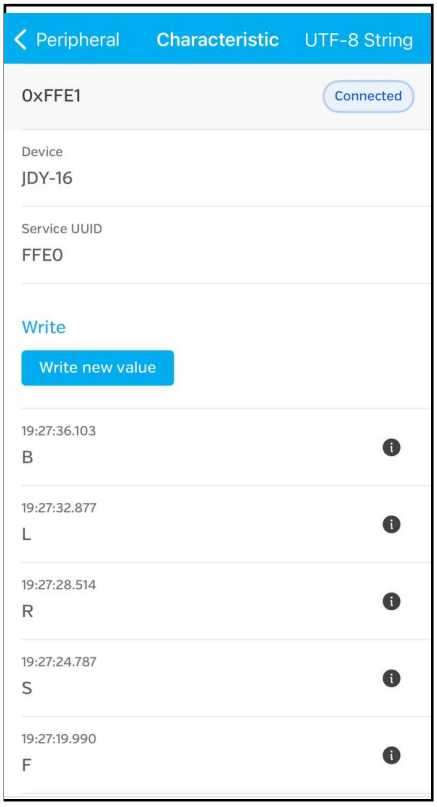

Figure 21: User Interference App.

3.2.2 Gold Detector Implementation

3.2.2.1 The circuit

The circuit, assembled on a breadboard, integrates a hand-wound copper coil (10 turns) to generate pulsed electromagnetic fields. Signal conditioning components like a 100nF capacitor (noise filtering) and 1N4007 diode (voltage protection) to stabilize input to the Arduino Nano. A 220Ω resistor safeguards the Nano’s analog pin (A1), which measures coil discharge rates. Upon detecting gold-like conductivity deviations, the Nano triggers a buzzer (audible alert) and LED (visual alert) via digital pins.

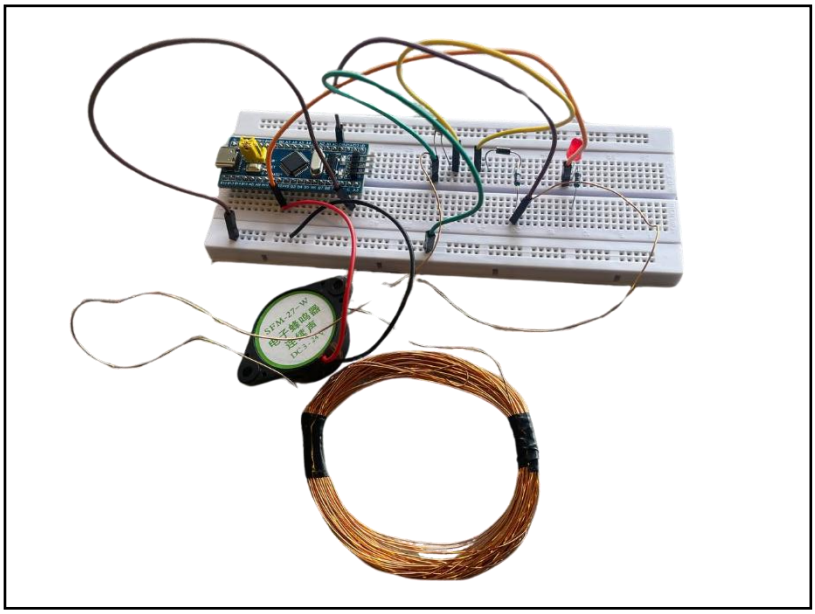

Figure 22: Gold Detector Circuit Implementation.

3.2.2.2 The code source

This code drives a pulse-induction metal detector using an Arduino Nano. It generates 12 high-speed pulses (via pin A0) to charge a capacitor, then measures discharge time (via A1) to detect conductivity changes caused by nearby metals. Noise is filtered using a moving average, excluding extreme values to reduce false triggers. Negative conductivity deviations (indicative of gold) activate an LED alert (pin D12), with alert duration dynamically scaled to signal strength.

```
const byte npulse = 12;

const byte pin_pulse = A0;
const byte pin_cap  = A1;
const byte pin_LED = 12;

void setup() {
  pinMode(pin_pulse, OUTPUT);
  digitalWrite(pin_pulse, LOW);
  pinMode(pin_cap, INPUT);
  pinMode(pin_LED, OUTPUT);
  digitalWrite(pin_LED, LOW);
}

const int nmeas = 256;
long int sumsum = 0;
long int skip = 0;
long int diff = 0;
long int flash_period = 0;
```

```
long unsigned int prev_flash = 0;

void loop() {

  int minval = 2000;
  int maxval = 0;


  long unsigned int sum = 0;
  for (int imeas = 0; imeas < nmeas + 2; imeas++) {

    pinMode(pin_cap, OUTPUT);
    digitalWrite(pin_cap, LOW);
    delayMicroseconds(20);
    pinMode(pin_cap, INPUT);
    //apply pulses
    for (int ipulse = 0; ipulse < npulse; ipulse++) {
      digitalWrite(pin_pulse, HIGH);
      delayMicroseconds(3);
      digitalWrite(pin_pulse, LOW);
      delayMicroseconds(3);
    }

    int val = analogRead(pin_cap);
    minval = min(val, minval);
    maxval = max(val, maxval);
    sum += val;


    long unsigned int timestamp = millis();
    byte ledstat = 0;
    if (timestamp < prev_flash +12) {
      if (diff > 0)ledstat = 1;
      if (diff < 0)ledstat = 2;
    }
    if (timestamp > prev_flash + flash_period) {
      if (diff > 0)ledstat = 1;
      if (diff < 0)ledstat = 2;
      prev_flash = timestamp;
    }
    if (flash_period > 1000)ledstat = 0;


    if (ledstat == 0) {
      digitalWrite(pin_LED, LOW);
    }
    if (ledstat == 1) {
      digitalWrite(pin_LED, LOW);
```

```
    }
    if (ledstat == 2) {
      digitalWrite(pin_LED, HIGH);
    }

  }


  sum -= minval; sum -= maxval;


  if (sumsum == 0) sumsum = sum << 6;
  long int avgsum = (sumsum + 32) >> 6;
  diff = sum - avgsum;
  if (abs(diff)<avgsum >> 10) {
    sumsum = sumsum + sum - avgsum;
    skip = 0;
  } else {
    skip++;
  }
  if (skip > 64) {
    sumsum = sum << 6;
    skip = 0;
  }


  if (diff == 0) flash_period = 1000000;
  else flash_period = avgsum / (2 * abs(diff));
}
```

3.3 Problems encountered during design and implementation

During the design and implementation phases of the smart gold detection vehicle system, several technical challenges were encountered that impacted the project's workflow. Each issue required careful analysis and the development of appropriate solutions to ensure system stability and achieve the intended objectives.

3.3.1 Excessive Current and Damage to Gold Detection Circuit Components

While testing the gold detection circuit, it was observed that the electronic components were frequently damaged due to excessive current exceeding the permissible limits, leading to the repeated need for replacement after each operation. This phenomenon negatively affected system performance and overall project progress.

To address this problem, a 1N4007 diode was incorporated into the circuit. The diode regulated the incoming current flow and prevented electrical surges resulting from the inductive effects of the copper coil, thus stabilizing the input voltage. After implementing this solution, a significant reduction in component temperatures was observed, and instances of component burnout were entirely eliminated, enhancing the system's overall reliability.

The final configuration of the circuit after adding the diode is illustrated in Fig (23).

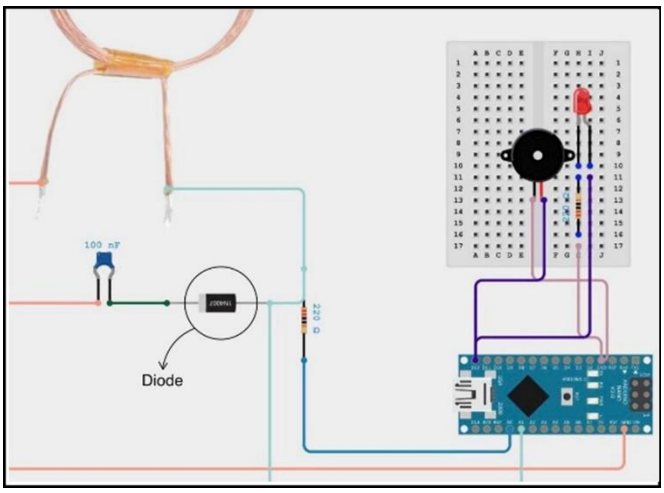

Figure 23: Diode placement for current regulation and circuit protection.

3.3.2 Challenges in Using a Control Application on the iPhone

During the programming phase of the vehicle's wireless system, it was found that installing the primary control application required an Android device. As such a device was unavailable within the project environment, an alternative application " LightBlue" , was utilized on iPhone devices.

However, the selected application did not provide a Graphical User Interface (Graphical User Interface) to facilitate the control process, presenting an additional challenge during system operation. To overcome this limitation, a method was developed to send commands in the form of text strings, where each movement command was represented by a single character (e.g., 'F' for forward, 'S' for stop).

This method of sending and receiving textual commands is clearly demonstrated in Fig (24), ensuring full operational control of the vehicle despite the absence of a dedicated interface.

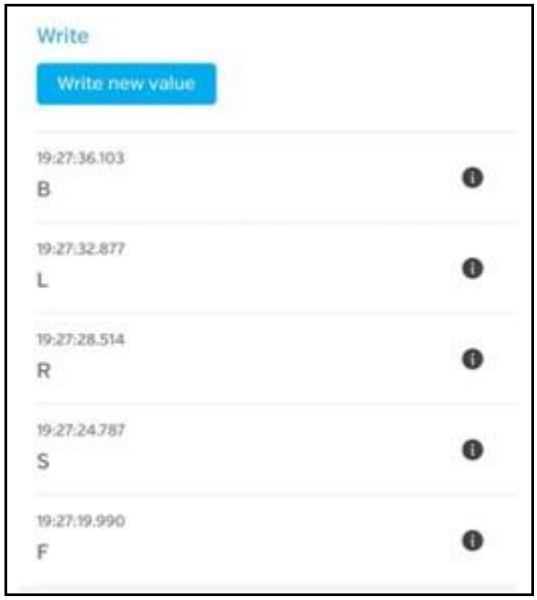

Figure 24: Text-based control commands for Vehicle movement.

Chapter 4

Results & Discussion

4.1 Project Testing

4.1.1 Step 1: Gold Detection Circuit Testing

The gold detection circuit was assembled using precise electronic components, including a hand-wound copper coil, a capacitor, a resistor, a protective diode, and a compact Arduino Nano microcontroller.

After verifying the integrity of all electrical connections, a gold sample was carefully placed near the copper coil to evaluate the circuit's responsiveness.

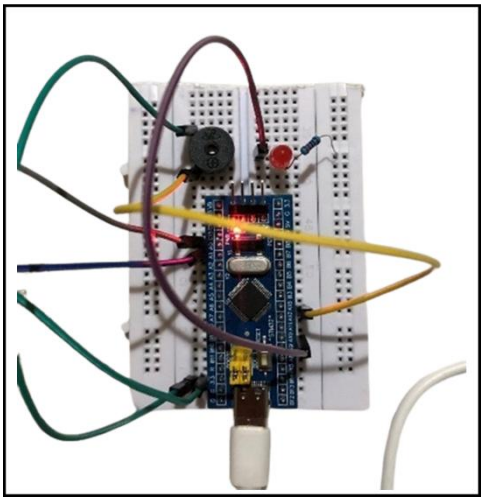

Figure 25: Circuit Test.

An immediate reaction was observed when the metallic object approached the sensing area. The buzzer was activated, and the LED indicator illuminated, confirming the circuit's sensitivity to electromagnetic disturbances caused by highly conductive materials such as gold.

4.1.2 Step 2: Vehicle System Testing

The smart vehicle was fully assembled, integrating the mechanical and electronic systems, including four-wheel drive motors, the main control board (Arduino Uno R3), a Bluetooth communication module, and the gold detection circuit mounted securely onto the vehicle's chassis.

Upon powering the system, the vehicle was wirelessly commanded to move forward, backward, and perform directional turns. During operation, a gold piece was strategically placed beneath the vehicle to simulate a hidden target scenario.

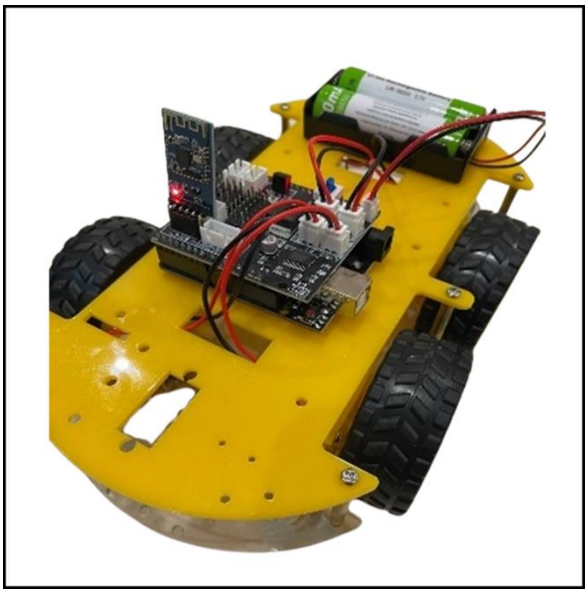

Figure 26: Vehicle Test.

4.2 Project Prototype and Results

The final prototype was developed by integrating the gold detection circuit with the smart vehicle system. All components were assembled to create a fully functional mobile platform capable of detecting metallic objects while navigating across different terrains. The electronic detection module was securely mounted onto the vehicle chassis, and careful calibration was conducted to ensure the accuracy of both the sensing and movement systems. High-precision wiring techniques were applied to reduce electromagnetic interference and improve system reliability during operation.

The integration process focused on achieving synchronization between the detection signals and the vehicle's real-time motion, ensuring immediate alerts upon the detection of conductive metals.

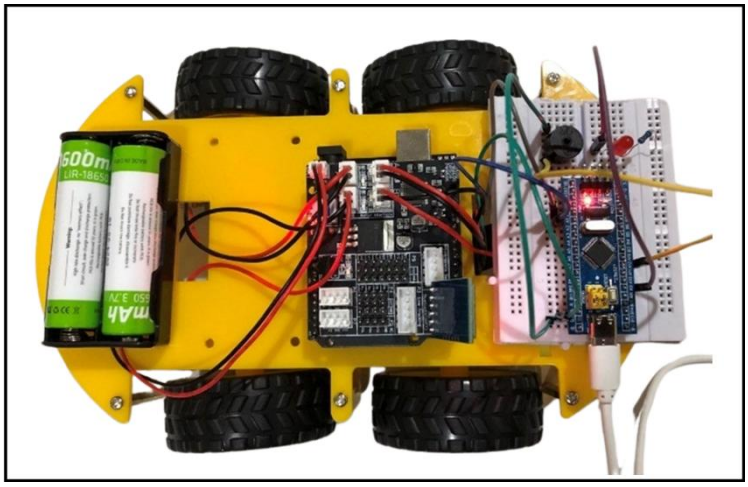

Figure 27: Complete system assembly.

After the prototype assembly, a comprehensive set of tests was performed to validate system functionality. The vehicle demonstrated stable movement in multiple directions, while the gold detection circuit accurately responded to hidden metal objects positioned beneath the vehicle. Both the mechanical structure and the electronic systems operated harmoniously, indicating that the design objectives of mobility, stability, and detection efficiency were successfully achieved. The final prototype offers a practical and reliable solution for remote metallic exploration tasks.

4.3 Discussion on Project Results

4.3.1 Bluetooth-Based Vehicle Control via iPhone

The robot car was successfully controlled using an iPhone through the LightBlue Explorer app. The JDY-16 BLE module responded accurately to single-character commands (like ‘F’ for forward or ‘S’ for stop), allowing for smooth wireless control. Adjustments in motor direction and pin configuration were critical in solving issues related to incorrect movement.

4.3.2 Safe and Remote Exploration

Using this robot, users can explore unstable or unsafe locations (e.g., collapsed areas, narrow tunnels, or unknown terrain) without putting themselves at risk. This makes the system valuable for gold or metal detection in places that are hard or dangerous to access manually.

4.3.3 Gold Detection Using Electromagnetic Response

A key innovation in this project was the integration of a circuit capable of detecting gold through electromagnetic principles. A coil generates a magnetic field, and when a conductive metal like gold enters that field, it causes changes in the signal due to eddy currents. The circuit detects this disturbance and activates a buzzer or LED to alert the user.

4.4 Problems and Challenges Faced During Project

4.4.1 PCB Printing Issues

The circuit schematic was designed using EasyEDA, a specialized software tool for creating professional PCB layouts. Multiple attempts were made to print the schematic onto a PCB board using thermal transfer methods; however, the results were unsatisfactory. The schematic was subjected to heat treatment in hopes of improving adhesion and transfer quality, but this approach ultimately failed, as illustrated in Figure 44. Direct printing onto the board failed despite experimenting with additional methods such as applying nail polish to protect

the traces and manually engraving the tracks after drawing them. All efforts concluded without achieving the desired stability of the circuit paths. As a result, it was decided to replace the PCB with a Breadboard for assembling the circuit, offering greater flexibility and faster assembly while maintaining the required functionality.

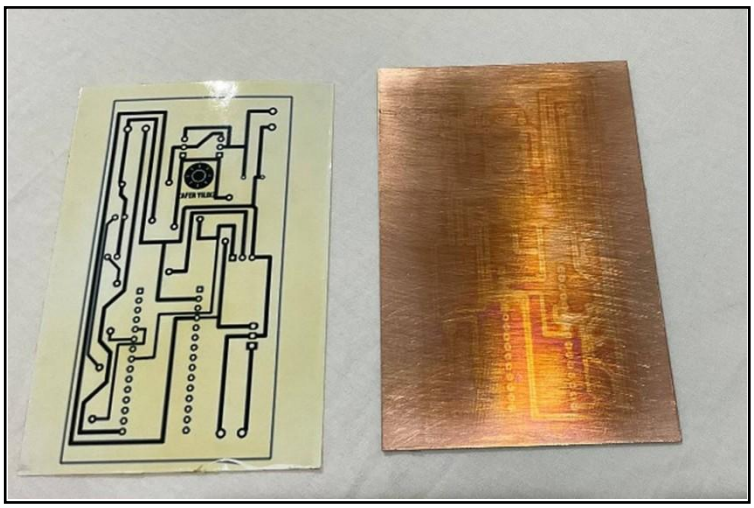

Figure 28: PCB design attempt.

4.4.2 Issues Related to the Type of Paper Used for Printing

During the PCB printing process, it became evident that a specific type of thermal transfer paper was essential to ensure high-quality transfer and accurate detailing. However, the appropriate paper was not available locally, prompting the use of alternative types such as magazine paper and glossy photo paper. Despite multiple attempts with these substitutes, the transfer process did not yield the desired quality. Defects such as weak ink adhesion and distorted fine lines appeared, which significantly impacted the clarity and reliability of the electronic traces necessary for the circuit's optimal performance.

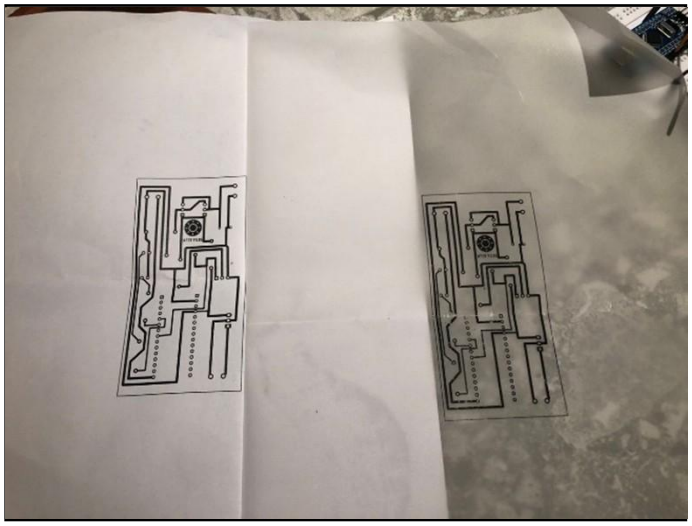

Figure 29: Paper test for printing.

4.4.3 Circuit Complexity and the Large Number of Components

A complex electronic circuit was prepared, incorporating a large number of different components to meet the project's gold detection requirements. However, assembling this extensive number of elements on a Breadboard caused multiple mechanical and electrical issues. Recurrent problems arose due to the Breadboard's inability to handle the large volume of connections, in addition to the damage of several components as a result of excessive electrical current, as previously discussed.

This situation led to difficulties in operating the system reliably and caused a noticeable decrease in overall performance efficiency. Consequently, a strategic decision was made to redesign the circuit, simplifying it by reducing the number of components while ensuring the same functional performance for gold detection tasks.

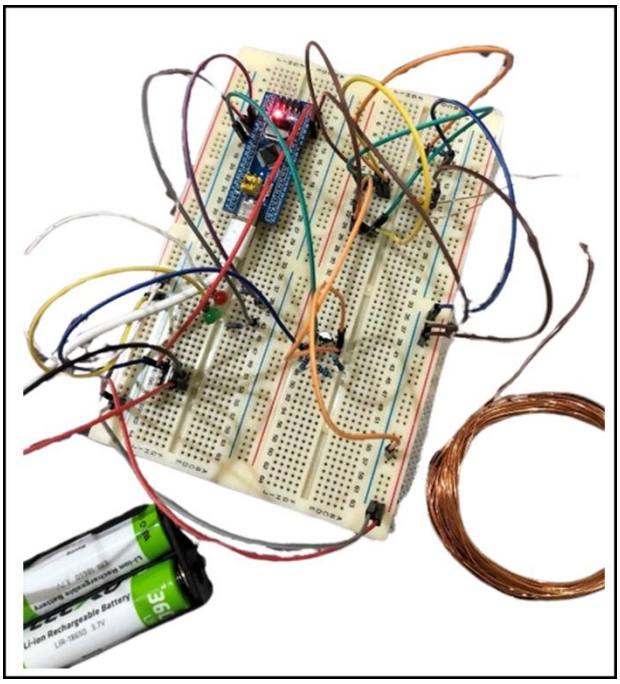

Figure 30: Breadboard circuit assembly.

4.4.4 Challenges in the Design of the Circuit Schematic

During the development of the initial circuit schematic, significant difficulties were encountered in arranging the electronic components in a manner that would ensure signal stability and minimize electrical interference. Due to the density of the components and the limited space available on the Breadboard, the layout faced several issues, leading to unwanted interference and performance instability. Several engineering adjustments were implemented, including reorganizing the placement of components and rerouting some electrical paths to achieve a better signal distribution and minimize electrical noise. These improvements

significantly enhanced the performance of the circuit and increased the efficiency of detection operations during the project's final testing phase.

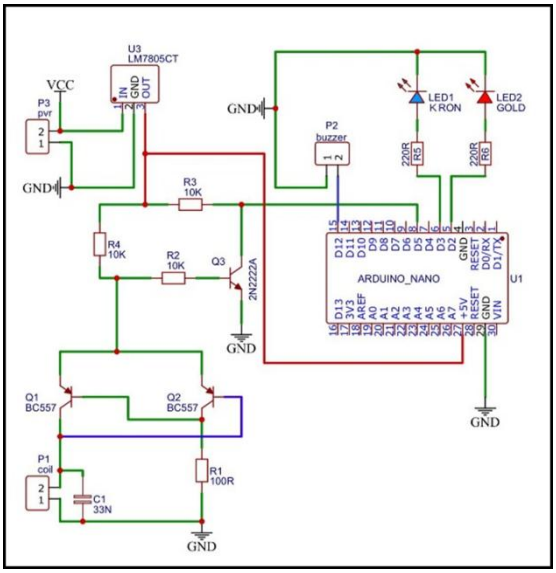

Figure 31: Gold detector circuit.

Chapter 5

Conclusion & Future Works

5.1 Conclusion

In this project, a wireless gold detection vehicle was successfully designed and implemented using embedded systems technology. The vehicle allows users to detect gold in hazardous or hard-to-reach areas remotely, reducing human risk and improving exploration efficiency. By integrating Arduino-based control, Bluetooth communication, and a custom-built gold detection circuit, the system demonstrated effective mobility and reliable metal detection capabilities. The project faced several technical challenges, such as electromagnetic interference and wiring issues, which were successfully addressed through careful design improvements. To sum up, the vehicle achieved its main goals and presented a safer, more efficient alternative for modern mineral exploration tasks.

5.2 Future Work

To further enhance the system, several improvements can be considered:

- **Autonomous Navigation:** Implement GPS modules and obstacle avoidance sensors to allow the vehicle to navigate without manual control.
- **Longer Range Communication:** Replace the Bluetooth module with Wi-Fi or RF modules to extend the control range beyond 10 meters.
- **Data Logging:** Add a memory module (e.g., SD card) to log detection events and locations for further analysis after exploration.

References

[1] Pereira, A. C., & de Souza, C. R., (2020). Autonomous robotic systems in mineral exploration: A review. Computers & Geosciences, 137, 104413.
Article available at https://doi.org/10.1016/j.cageo.2020.104413. Last visit date 28/03/2025.

[2] Business Research Insights., (n.d.). Digital Metal Detector Market Report.
Article available at https://www.businessresearchinsights.com/market-reports/digital-metal-detector-market-110562. Last visit date 05/04/2025.

[3] ETH Zurich., (n.d.). Metal Detectors Complete Report.
Article available at https://www.files.ethz.ch/isn/26730/MetalDetectors_complete.pdf. Last visit date 03/04/2025.

[4] Wikipedia., (n.d.). Environmental issues in Colombia.
Article available at https://en.wikipedia.org/wiki/Environmental_issues_in_Colombia. Last visit date 07/04/2025.

[5] MDPI., (2023). Mercury Pollution and Its Health Impacts.
Article available at https://www.mdpi.com/2305-6304/12/5/323. Last visit date 09/04/2025.

[6] PubMed Central., (n.d.). Mercury Exposure in Gold Workers.
Article available at https://pmc.ncbi.nlm.nih.gov/articles/PMC4080518. Last visit date 15/04/2025.

[7] Wikipedia., (n.d.). Natural resource and waste management in Tanzania.
Article available at https://en.wikipedia.org/wiki/Natural_resource_and_waste_management_in_Tanzania. Last visit date 04/04/2025.

[8] Business Research Insights., (n.d.). Metal Detector Market Report.
Article available at https://www.businessresearchinsights.com/market-reports/metal-detector-market-105264. Last visit date 10/04/2025.

[9] Investing News Network., (n.d.). Satellite Imagery and Gold Exploration.
Article available at https://investingnews.com/daily/resource-investing/precious-metals-investing/gold-investing/satellite-imagery-and-gold-exploration/. Last visit date 11/04/2025.

[10] Arduino., (n.d.). Arduino - Home.
Article available at https://www.arduino.cc/. Last visit date 05/04/2025.

[11] Punch Through., (2023). LightBlue Explorer, iOS App.
Article available at https://apps.apple.com/app/lightblue/id557428110. Last visit date 12/04/2025.

[12] Wikipedia., (n.d.). Arduino Uno.
Article available at https://en.wikipedia.org/wiki/Arduino_Uno. Last visit date 06/04/2025.

[13] Etechnophiles., (n.d.). HC-05 Pinout Specifications Datasheet.
Article available at https://www.etechnophiles.com/hc-05-pinout-specifications-datasheet/. Last visit date 08/04/2025.

[14] LAFVIN., (n.d.). 4WD Smart Robot Car Kit V2 for Arduino Robot STEM.
Article available at https://lafvintech.com/products/lafvin-4wd-multi-robot-car-kit-upgraded-v2-0-for-arduino-robot-stem-graphical-programming-robot-car. Last visit date 14/04/2025.

[15] Wikipedia., (n.d.). Lithium-ion battery.
Article available at https://en.wikipedia.org/wiki/Lithium-ion_battery. Last visit date 04/04/2025.

[16] Wikipedia., (n.d.). Arduino Nano.
Article available at https://en.wikipedia.org/wiki/Arduino_Nano. Last visit date 05/04/2025.

[17] ScienceDirect Topics., (n.d.). Breadboard - an Overview.
Article available at https://www.sciencedirect.com/topics/engineering/breadboard. Last visit date 07/04/2025.

[18] Byju's., (n.d.). Resistor.
Article available at https://byjus.com/physics/resistor/. Last visit date 08/04/2025.

[19] EngineerFix., (n.d.). What are Ceramic Capacitors.
Article available at https://engineerfix.com/electrical/capacitors/what-are-ceramic-capacitors/. Last visit date 09/04/2025.

[20] Wikipedia., (n.d.). Copper conductor.
Article available at https://en.wikipedia.org/wiki/Copper_conductor. Last visit date 06/04/2025.

[21] Quisure., (n.d.). What is a Buzzer.
Article available at https://www.quisure.com/blog/faq/what-is-a-buzzer. Last visit date 08/04/2025.

[22] Wikipedia., (n.d.). Soldering Iron.
Article available at https://en.wikipedia.org/wiki/Soldering_iron. Last visit date 07/04/2025.

[23] Diotec Semiconductors., (n.d.). 1N4007 - Authorized Distributor.
Article available at https://www.onlinecomponents.com/en/productdetail/diotec-semiconductors/1n4007-55541332.html. Last visit date 10/04/2025.