A Project Report On

LET US TALK THROUGH GESTURE VOCALIZER

Submitted in partial fulfillment of the requirement for the 8th semester

Bachelor of Engineering

in

Computer Science and Engineering

DAYANANDA SAGAR COLLEGE OF ENGINEERING

(An Autonomous Institute affiliated to VTU, Belagavi, Approved by AICTE & ISO 9001:2008 Certified)

Accredited by National Assessment & Accreditation Council (NAAC) with 'A' grade

Shavige Malleshwara Hills, Kumaraswamy Layout, Bengaluru-560078

Submitted By

Thejaswini S Acharya 1DS19CS181

Vaibhavi Vishwananth Badiger 1DS19CS184

Yashaswini M 1DS19CS195

Sulaksha Sayeesh Padti 1DS20CS420

Under the guidance of

Prof. Prasad A M

Assistant Professor, CSE , DSCE

And

Sumit Sagar

Co-guide - Walmart-Retail

2022 - 2023

Department of Computer Science and Engineering

DAYANANDA SAGAR COLLEGE OF ENGINEERING

Bengaluru - 560078

VISVESVARAYA TECHNOLOGICAL UNIVERSITY

Dayananda Sagar College of Engineering

(An Autonomous Institute affiliated to VTU, Belagavi, Approved by AICTE & ISO 9001:2008 Certified)

Accredited by National Assessment & Accreditation Council (NAAC) with 'A' grade

Shavige Malleshwara Hills, Kumaraswamy Layout, Bengaluru-560078

Department of Computer Science & Engineering

CERTIFICATE

This is to certify that the project entitled **Let Us Talk Through Gesture Vocalizer** is a bonafide work carried out by **Thejaswini S Acharya [1DS19CS181]**, **Vaibhavi Vishwanath Badiger [1DS19CS184], Yashaswini M [1DS19CS195]** and **Sulaksha Sayeesh Padti [1DS20CS420]** in partial fulfillment of 8th semester, Bachelor of Engineering in Computer Science and Engineering under Visvesvaraya Technological University, Belgaum during the year 2022-23.

Prof. Prasad A M	**Dr. Ramesh Babu D R**	**Dr. B. G. Prasad**
(Guide)	Vice Principal & HOD	Principal
Asst Prof. CSE, DSCE	CSE, DSCE	DSCE
Signature:.....	Signature:.....	Signature:.....

Name of the Examiners: Signature with date:

1..... .....

2..... .....

Acknowledgement

We are pleased to have successfully completed the project **Let Us Talk Through Gesture Vocalizer**. We thoroughly enjoyed the process of working on this project and gained a lot of knowledge doing so.

We would like to take this opportunity to express our gratitude to **Dr. B G Prasad**,Principal of DSCE, for permitting us to utilize all the necessary facilities of the institution.

We also thank our respected Vice Principal, HOD of Computer Science & Engineering, DSCE, Bangalore, **Dr. Ramesh Babu D R**, for his support and encouragement throughout the process.

We are immensely grateful to our respected and learned guide, **Prof. Prasad A M**, Assistant professor, CSE, DSCE and our co-guide **Sumit Sagar**, for their valuable help and guidance. We are indebted to them for their invaluable guidance throughout the process and their useful inputs at all stages of the process.

We also thank all the faculty and support staff of the Department of Computer Science, DSCE. Without their support over the years, this work would not have been possible.

Lastly, we would like to express our deep appreciation towards our classmates and our family for providing us with constant moral support and encouragement. They have stood by us in the most difficult of times.

Thejaswini S Acharya 1DS19CS181

Vaibhavi Vishwanath Badiger 1DS19CS184

Yashaswini M 1DS19CS195

Sulaksha Sayeesh Padti 1DS20CS420

Abstract

One method of communicating our ideas, messages, and knowledge is through vocal communication. However, because of various physical limitations, none of us is endowed enough to be able to communicate verbally with others. The people who have the most difficulty communicating with others are the deaf and the mute. More than 5% of the world's population has speech and hearing impairments, which makes it difficult for them to talk because they only use sign language. To communicate with one another, we all speak many languages. Deaf and silent people can also communicate with themselves using sign language. The issue arises when normal individuals must communicate with deaf-mute people or the other way around. S, we thought of proposing a solution, which converts those gestures into text and speech. We have developed a glove that does the same work. But the output is seen through an Android device.

Table of Contents

Abstract **i**

List of Figures **iv**

1 Introduction **1**

1.1 The problem 1

1.2 Real world application 2

1.3 Organisation of Project Report 3

2 Problem Statement and Proposed Solution **4**

2.1 Problem Statement 4

2.2 Existing Systems 4

2.2.1 Hand gesture recognition system for Sports Referee Training 4

2.3 Proposed Solution 6

2.3.1 Hardware setup 6

2.3.2 Data Collection 6

2.3.3 Data comparison 7

2.3.4 Data transfer from the microcontroller to Bluetooth module and voice module . 7

2.4 System Requirements 9

3 Literature Survey **10**

3.1 Sensor-based solutions 10

3.1.1 Vision-based solutions 13

3.1.2 Hybrid Solution 14

4 Architecture and System Design **17**

4.1 System Overview 19

4.1.1 System Block Diagram 19

4.1.2 Data Flow Diagram 21
4.1.3 Ciruit Diagram 23
4.1.4 Usecase Diagram 25
4.1.5 Sequence Diagram 27

5 Implementation **28**
5.1 Implementation Platform 28
5.1.1 Hardware 28
5.1.2 Software 28
5.2 Implementation Details 28
5.2.1 Hardware Implementation 28
5.2.2 Implementation Workflow 30
5.3 Dataset 32

6 Testing **33**

7 Experimentation and Results **34**
7.1 Experimentation 34
7.2 Results 35

8 Conclusion **41**

References **42**

List of Figures

1.1 Picture depicting the problem faced by normal and deaf/mute people 1

2.1 Accelerometer and its working principle. 7

2.2 Proposed solution 8

4.1 System block diagram 20

4.2 Data flow diagram 21

4.3 Circuit diagram of our proposed project 23

4.4 Usecase diagram 25

4.5 Sequence diagram 27

5.1 Implementation diagram 30

7.1 Diagram depicting three axes of accelerometer on the glove 36

7.2 Gestures performed in x-axis less than 300 37

7.3 Gestures performed in x-axis greater than 400 37

7.4 Gestures performed in y-axis less than 300 39

7.5 Gestures performed in y-axis greater than 400 39

7.6 Gestures performed in y-axis less than 300 40

Chapter 1

Introduction

1.1 The problem

Communication is a process of forwarding or exchanging information, and it can be achieved correctly only when all the members use the same language for interaction. However, each of us is not provided to be able to disperse our thoughts in verbal mode with others due to some physical impairments. Normal people like us will across difficulties in understanding and adapting their language. The deaf and the mute are the ones who face extreme problems in forwarding their messages to others. We all speak several languages to communicate with each other. In the same way, deaf-mute people also have sign language to communicate with themselves. The problem arises when normal people need to forward their messages to the deaf-mute or vice-versa.

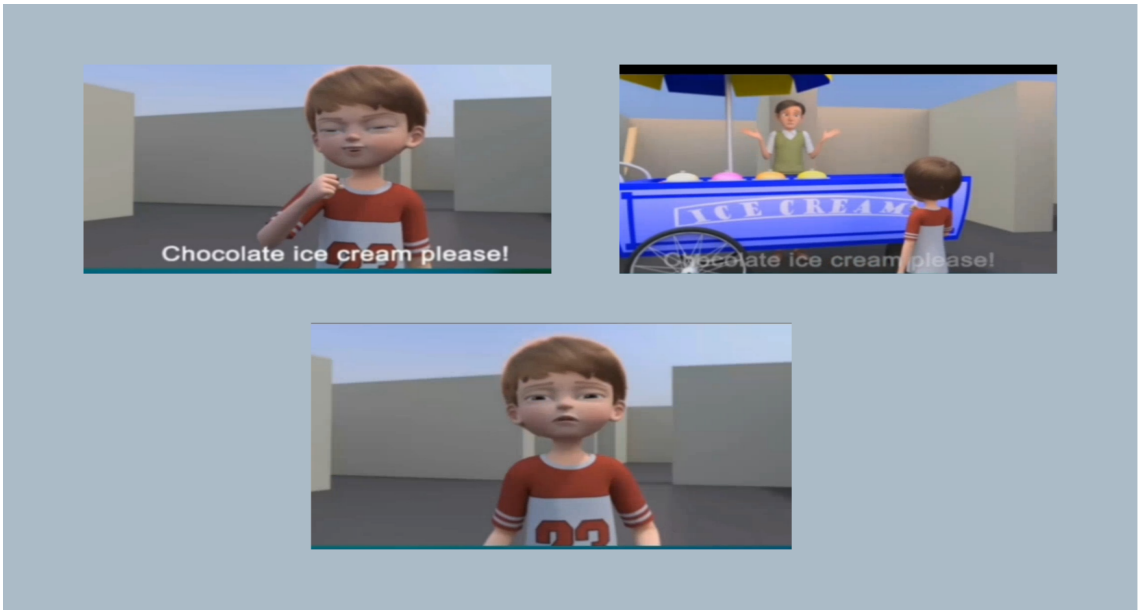

Figure 1.1: Picture depicting the problem faced by normal and deaf/mute people

Sign language covers the usage of different parts of the body, such as fingers, hands, arms, shoulders, head, and facial expressions. As they cannot use verbal ways, then the only way of transferring their messages is sign language for them. But not everybody can understand sign language which creates a barrier between 2 parties. It is the same difficulty that two people may undergo when they do not know a common language. To correct and solve this issue, a sign language recognition system is expected to be the solution that helps to mitigate the problems undergone by deaf and mute people as well as the rest of the community.

1.2 Real world application

To solve the problem of communication between normal people and deaf-mute people, we thought of proposing our project using a translator. Other than this our project has many other real-world applications:

1. Health diagnostics:

   Through analysis of reports, doctors can help diagnose patients with diseases or problems in order to improve their full health condition. On top of analyzing motions, gesture analysis and machine learning can be utilized to find the small movements to help identify possible diagnoses. It can be used to develop equipments that prepare people with various types of impairments the use electronic systems to simplify their daily activities, such as enabling speech/hearing disabled people to tell about their illnesses to medical staff without the support of interpreters. Furthermore, it boosts the lives of elderly people by providing them with a more detailed and simplified method for interacting such as replacing the remote-control function with the electronic glove features.

2. Idustries:

   Another field is the usage of sensory gloves in the industry or commercial enterprises, as sign recognition mechanics that can be used in firms to audit every manufacturing process. In commercial enterprises such as the gaming industry, robotic arm controls, visual reality, and entertainment, gesture recognition mechanisms can be used.

3. Education:

   The sensory glove could be utilized as a teaching device to increase Deaf students' educational interest and encourage them in places where they are unable to be backed by human translators. There are plenty of applications/devices that can be used as a learning method for speech/hearing disabled children at their school.

1.3 Organisation of Project Report

The project report is organized as follows:

In Chapter (2) we discuss the problem statement and the proposed solution. We also take a look at the systems that exist today and the drawbacks they face.

Chapter (3) takes a more in-depth look at various hardware and software-based solutions that exist, with a survey on existing literature available.

Chapter (4) looks at the architecture of the proposed solution with an overview of the system design, utilizing system block diagrams and data flow diagrams.

Chapter (5) dives into the Implementation of the solution, by describing the hardware and software requirements, along with dataset descriptions and implementation details.

Chapter (6) describes our testing process, while Chapter (7) looks at our experimentation process and the obtained results.

Chapter (8) summarizes our findings and concludes the paper.

Chapter 2

Problem Statement and Proposed Solution

2.1 Problem Statement

To develop a gesture recognition system using copper sheets and accelerometer sensor to remove the communication barrier between normal people and deaf-mute people. Sign language is the only way to communicate between a normal person and a deaf /mute person, but most normal people cannot understand sign language. During emergencies, forwarding their message is a very difficult task. Thus, there is a need to develop a device that can interpret hand gestures into text and speech.

2.2 Existing Systems

The existing system had developed a gesture-recognizing training system using myo sensors. This device is developed to train the referees of basketball games with gestures, which include 2 types of motion subtle (9 gestures)and large motion(12 gestures). They have used SVM and DBN with selective handcrafted features for differentiation. For the processing of data, Sensors like EMG, and IMU are used to capture the hand movements, and positive output is given if they give the correct ORS. Pre-recorded videos and judgments are already fed to the system for comparison.

2.2.1 Hand gesture recognition system for Sports Referee Training

In this system, the user wears the Myo armband sensor and observes pre-recorded videos of professional sports games annotated with Official referee signals ground truth. When watching the video, the trainee can make an Official referee signals freely according to his/her own judgment at any time, and our Official referee signals recognition technique will detect and classify the trainee's gestures. Referees need to be trained properly, and for that he/she needs to practice very well. I In reality, they will not get that amount of time with real basket ball game.

The training system will report the correctness to the trainee and give a warning if the trainee misses

a violation or a foul event. The novice referees can repeatedly practice how to judge and perform correct Official referee signals by using this training system, which contains several pre-recorded videos of basketball games and the corresponding ground truth of judgments. Thus referee can get trained by himself with the myo armband.

2.3 Proposed Solution

We are proposing a solution to this problem using copper and Accelerometer sensors. A glove is developed where copper sheets and Accelerometer sensors, they are mounted on top of it. A microcontroller, Arduino Nano is used to process the gestures, voice module and speaker are used to produce voice output and text output is presented on android device through bluetooth module. That glove is used to perform gestures, The output is produced by an android application as voice outputand also displayed on the Bluetooth application in an Android device as text. In this way, a prototype of a gesture vocalizer is developed for 20 different gestures with 20 different sentences.

2.3.1 Hardware setup

To have a portable system, we developed our product as a glove with sensors and a microcontroller. We have used five copper sheets for five fingers of the left hand and an accelerometer for dynamic gestures. All these sensors are mounted on top of the glove. A sensory connection with the microcontroller is done to collect the data when the user does gestures.

2.3.2 Data Collection

Copper sheets are mounted on top of eachfingers of the left hand as shown in Figure 2.2. They are connected to the input pins of Arduino nano board. They will give digital inputs. We have used a three-axis accelerometer with three pieces of data. Accelerometer sensors are ICs that measure acceleration, which is the change in speed (velocity) per unit of time. Measuring acceleration makes it possible to obtain information such as object inclination and vibration. Thus seven types of data can be used to identify a gesture. Some gestures may use one or two-axis data from the accelerometer only. In this way, collected data are studied for each gesture.

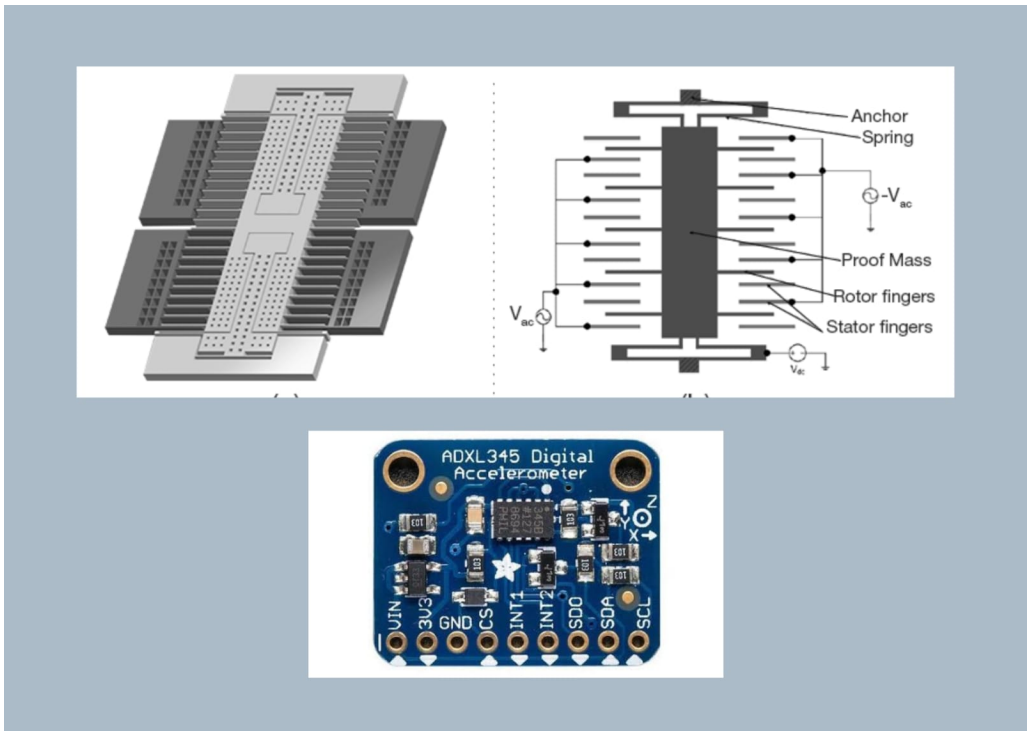

Figure 2.1: Accelerometer and its working principle.

2.3.3 Data comparison

The collected data's are studied for each gesture. A different group of people wore the glove and asked to do a gesture. In this way, we found that a range of data is used for doing the same gesture by different people. Thus, for the different ranges of data of the same gesture are assigned with one sentence. So, each time the same output is produced by the microcontroller.

2.3.4 Data transfer from the microcontroller to Bluetooth module and voice module

Collected data's are compared and processed in the microcontroller. Microcontroller is a compressed microcomputer manufactured to control the functions of embedded systems. Then the output need to be transferred to Bluetooth for further processes. Bluetooth BLE module is a technology that acts as an interface that aids the wireless Bluetooth Low energy connection of any two devices and establishes a protocol for the communication of data between the devices. Bluetooth module will transfer the output data from the microcontroller Arduino to other devices (Android devices).

Figure 2.2: Proposed solution

2.4 System Requirements

- Processor: 4 Core, 8 Thread Processor
- Memory: Minimum of 16 GB ram for computation
- Operating System: Windows

Chapter 3

Literature Survey

Numerous solutions exist to detect sign language gestures and gives output. They are broadly divided into three categories:

- Sensor-based solution.
- vision-based solution
- hybrid solution

The sensor-based solution uses different kinds of wearable sensors like flex sensor, accelerometer sensor, IMU sensor, touch sensor, MYO sensor, etc to recognize the sign language gestures. On the other hand, the vision-based approach makes use of the camera to capture the sign language to analyze and detect the gestures. Hybrid solution make use of both glove-based system and vision based approach to recognize the sign language gestures.

3.1 Sensor-based solutions

Vishal Pathak et al. of [1] has used sensors to build a glove which can capture the movement made by the user's hand. They have chosen sensor over image-base because of it better result and accuracy on identifying American sign Language(ASL). The idea author has proposed can be implemented for using this device for longer duration since the position of sensor are very well placed and accurate. The whole process begins with collecting data from three different sensors which works based on voltage difference due to finger and wrist movement. Then we observe a microcontroller which analyses and processes these data. Usually these data are in analog format which later converted to digital data. This device gives out two different output, first is an text format and the other is audio which is produced with help of an IC converter which converts a text-to-sound.This glove is less

flexible compared to other gadgets to reduce chances of fluctuation. They have achieved a accuracy of 100% for Dynamic gesture recognition with the success rate of 90%.Author has provided a plastic wrapping around sensors to reduce contamination since they are quite sensitive and fragile , if they are damaged they need a replacement each time. Even though this device has a good success rate for recognising dynamic gesture , their drawback lies in fixed letter identification. Author plan improve this device which can recognise letters of ASL to recognise word with providing more mobility with help of wireless module

X. Chu et al. of [2] proposed a solution where a Japanese Sign Language Sensor-Based Hand Gesture Recognition System is available here. The author has proposed a method for recognizing gestures that use five flex sensors, an IMU sensor, and one force-sensing resistor to detect hand and finger movements. They also used the SVM and DTW algorithms to calculate the average percentage, which comes to 82.5%. This particular system can recognize 24 static and two dynamic gestures. and they identified 8 sentences, including "Nice to meet you," "Could you please," "Good morning," "Good afternoon," "Good evening," "Thanks," and "Thank you for your hard work." For continuous values, they automatically segmented the values, calculated the average for five samples, and compared that value with the threshold.

Syed Shahbaaz Ahmed et al. of [3] developed a framework that requires minimal user calibration to identify the alphabetic gestures of American sign language(ASL). This system uses a collection of sensors like, flex sensors, inertial sensor, and contact sensors. All these sensors are placed on the hands to record the point of contact using contact sensors and hand movements using flex and inertial sensors whenever user performs any sign. State-based gesture modeling approach is used in this system to reduce the user calibration. To create a state-based model they have used only 7 gestures. For a particular user, to create a state-based model for all 26 alphabetic gestures this system uses all of the 7 gestures. This approach is used for gesture identification. This system is tested for up to 150 times on 2 experts and 1 inexpert American sign language signer. This system has given efficiency rate upto 92% and 81% each.

Xu Zhang et al. of [4] introduces a framework that includes a three-axis accelerometer and a multichannel electromyography(EMG) sensor, which combines the information from these sensors for hand gesture recognition. Then the framework utilizes the EMG signals to determine the beginning and end point of any significant signs using HMM(Hidden Markov Model) and decision tree algorithms. To estimate the performance, this system uses seventy- two Chinese sign language words, which are performed by a single hand and it also evaluates the sign language recognition by recognizing

the 40 Chinese Sign Language(CSL) sentences. It also evolved a real-time gesture-based control application for a virtual Rubik's cube game utilizing 18 hand gestures as control commands. For user-specific trials on 18 hand gestures, this system achieved 97.6% accuracy for all subjects, and for user-independent trials, it achieved 90.2% of recognition accuracy.

Karly Kudrinko et al. [5] provides a detailed examination of the developments and difficulties in the field of wearable sensor-based sign language recognition. The authors' goal is to present a thorough analysis of the cutting-edge methodologies and technology employed in the creation of wearable systems for sign language recognition. The relevance of sign language as a medium of communication for the deaf and hard-of-hearing community is emphasised in the paper's first paragraph. It draws attention to the drawbacks of conventional methods for sign language recognition, which frequently rely on computer vision methods. Wearable sensor-based systems, according to the authors, have become an attractive alternative since they provide more versatility, precision, and the potential for real-time applications. The evaluation covers a wide range of wearable sensor-based sign language recognition-related topics. Accelerometers, gyroscopes, flex sensors, and electromyography (EMG) sensors are only a few of the popular sensors covered by the authors. They investigate how these sensors can record and interpret hand, body, and muscle motions to deduce sign language gestures.The research also explores the machine learning and signal processing algorithms used in wearable sign language identification. The importance of feature selection and dimensionality reduction for obtaining reliable recognition results is highlighted. It digs into feature extraction techniques, such as time-domain and frequency-domain analysis. The authors also go over various machine-learning techniques for identifying sign language movements, such as decision trees, support vector machines (SVMs), and deep learning models. The obstacles and restrictions that wearable sign language recognition systems must overcome are further discussed in the study. It deals with concerns such as sensor positioning, calibration, robustness to changes in user performance, and the requirement for customized models. The authors talk about how ambient elements, like illumination and background noise, affect system performance and offer potential methods to lessen these difficulties. The research concludes with a thorough analysis of wearable sensor-based sign language recognition systems, emphasizing their potential to help people with hearing loss communicate more effectively. It outlines the developments in sensor technology, signal processing methods, and machine learning algorithms while also discussing the difficulties and restrictions posed by these developments.

3.1.1 Vision-based solutions

S. S. Hazari et al. in [6] had discussed the sign language conversion mechanism using a device named the Kinect motion sensor . The proposed system contains details about how the training and conversion process is done using the device discussed above. In the training cycle, the subject has to perform each gesture 5 times in front of the device. Then the mean of each gesture's 5 inputs is found and stored in the database. In the conversion process, once the subject recreates a gesture it compares with the database, and it gives the word output stored in that database. Otherwise, it shows the message saying that the gesture is not available and suggests training the model for that undefined sign. Even this device has some faults like it can provide an incorrect output when it fails to capture real-time data. Here is the current work of this paper speech conversion of the words is not done.

D. Naglot of [7] paper introduced a special kind of gesture-identifying sensor named as Leap Motion controller(LMC). Using LMC, a mechanism was developed for deaf or mute people around the world and they can communicate fluently with normal people through their sign language. Firstly, LMC captures the gestures performed by them. From those, palm & finger-related data were extracted through LMC. They were normalized as feature sets, then they were sent into a multilayer perceptron neural network(MLP) to perform the procedure of classification. After that, procedure signals were passed to artificial neural networks from which output units that specify alphabets or numbers of the performed gestures were produced. An algorithm was also used to minimize the error by propagating backwardly. The proposed system was able to attain above 95% of accuracy in finding 26 letters of American Sign Language(ASL). The author of [11] paper also suggested enhancing their system for sentences or words in the future.

Himanshu Gupta et.al [8] has specified some of the facts in the beginning, such as that there are 137 sign languages and that, as spoken languages, each region has more than one sign language. and they have similarities to spoken languages. For humans, gestures are very important, and hand gestures are the most simple way for us to convey messages. Vision-based hand gesture recognition is a pretty famous topic these days, but it does have some of its own disadvantages, such as complex backgrounds, the complicated nature of dynamic and static gestures, and obstacles. These days, to recognise the fingers of the hand, the "curvature space method" is used; it is the most robust approach that can be used. To capture these spaces, cameras are used. simple algorithm for the approach. Here in computer vision tools, they have included filters, descriptives, orientation, histograms, neural networks, and unique mapping technology. and segmentation of the hand image is done based on skin colour statistics, preprocessing algorithms are used to find the centre of gravity, and based on the

signal sign, it will be identified.

Sakshi sharma et. al of [9] mainly focused on vision based also known as image-based sign language where he proposed a idea which can be used in the advancement of gesture recognition. The proposed idea gives a brief on state-of-the-art techniques along with a better algorithm for computer vision which captures the gestures of the sign language. Physically disabled people like deaf and mute face a lot of issue to establish conversation with people. Hence they use sign language but not everyone are aware of it, there by author proposed a vision based gesture recognition system which can give two different output. One is text format and other is audio by analyzing the movement made by user by capturing the gesture through a camera and apply a algorithm on the captured image to process it. The author achieved this goal by exploring various methods like machine learning-based techniques, statistical methods and template-based approaches. He also gives a overview on different techniques and components that can be used here. This paper also discusses the challenges and drawbacks in this prosses like distance of camera, conditions of the lighting. They have also face many issues with dynamic gesture recognition but the proposed idea can be further utilized for real-time use deaf individuals.

Ahmed et. al of [10] used the DTW(Dynamic Time Wrapping) method to detect sign language recognition. This system requires a typical personal computer and a USB webcam to capture the gestures. Here, a webcam is connected to the computer and the user performs gestures in front of the webcam. Webcam captures each motion performed by the user and extracts the frames. These frames are considered as an input to this system, and then the finalization of significant frames takes place between two frames based on the user's skin color and pixel of an image with the motion difference. This system determines the center mass of the user's face and the two hand regions and performs Euclidean distance measure with the center of the frame for each of the frames. This system contains a predefined set of gestures, which is stored in the database for pattern matching. This system contains 24 hand signs and developed real-time hand tracking and face localization and has achieved 90% of recognition accuracy.

3.1.2 Hybrid Solution

Y. Huang et al. of [11] An innovative method of hand gesture recognition is presented by authors Yu Huang, Dorothy Monekosso, Hui Wang, and Juan Carlos Augusto. The authors discuss the significance of hand gesture detection in various HCI systems and offer a hybrid approach that includes both appearance-based and model-based techniques. To increase the precision and resilience of hand gesture recognition systems, the capabilities of both approaches will be combined.With the

use of a machine learning algorithm, the appearance-based approach focuses on extracting distinguishing traits from photos of hands. The system can identify hand motions based on their outward appearance due to these features, which record visual elements including color, texture, and shape. The model-based approach, in contrast, uses a 3D hand model to capture the hand's spatial configuration and behaviour. With the help of this method, precise hand articulation and movement may be captured, adding more details for gesture detection.The authors provide a fusion procedure that merges the feature vectors acquired using both strategies in order to combine both approaches.The hybrid technique tries to increase recognition performance by utilising the complimentary nature of the information acquired by each method.Using a publicly accessible dataset of hand gestures, the authors assess the effectiveness of their hybrid technique. According to experimental findings, the hybrid technique beats both the model-based and appearance-based strategies in terms of recognition accuracy. In addition to showing resistance to changes in hand look and attitude, the hybrid technique delivers greater overall identification rates.

O. R. Chanu et al. of [14] begin by stressing the growing need for hand gesture detection systems in a variety of applications, including human-computer interaction and the recognition of sign language. They underline the requirement for quick and precise methods of hand motion recognition.The creators of the vision-based approach use image processing and computer vision methods to identify hand motions. They outline the general process, which includes utilizing a camera to record hand motions, segmenting the hand region, extracting pertinent data, and recognizing the gestures using a classifier. The authors go over several methods and algorithms that are applied at each stage of the vision-based methodology. The data-based technique, on the other hand, entails gathering a sizable dataset of hand gestures and teaching a machine learning model to identify these motions. The acquisition of datasets, preprocessing, feature extraction, and selection of machine learning methods for training and recognition are all explained by the authors.The authors conduct tests utilizing various hand gesture datasets and assess the effectiveness of both approaches in order to compare the two methods. They examine a variety of parameters, including recognition precision, processing speed, and environmental robustness.The study's findings suggest that both vision-based and data-based approaches have benefits and drawbacks. The vision-based method works well in real-world situations and is resistant to changes in lighting. The data-based strategy, on the other hand, achieves higher recognition accuracy but necessitates a substantial amount of labeled training data.The choice between vision-based and data-based algorithms for hand gesture identification depends on the particular application needs, resources available, and trade-offs between accuracy and real-time

performance, the authors conclude based on their research.In conclusion, this work compares methods for hand gesture identification that rely on data versus those that rely on vision. It examines both techniques' methodologies, algorithms, and performance evaluation, highlighting their advantages and disadvantages in various situations.

To summarize the literature survey, we found that flex, myo and other types sensors are a bit costly and very sensitive. For every translation system, they have got the highest accuracy, but still got drawbacks. Among all the three types of solutions, sensor-based solution plays an important role. As it can avoid many disturbances vision-based systems can have. This literature survey helped us to find a better way to develop a gesture conversion system efficiently.

Chapter 4

Architecture and System Design

The overview of the system is represented in figure 4.1 . It shows the modules involved in building the system.

- Copper sheets
- Accelerometer sensor
- Arduino micocontroller
- Bluetooth module

The copper sheet is cheap in cost compared to other conductors. Copper has a greater number of free electrons than other metals, so it will be the better conductor of electricity. We have a copper sheet as the input part. We collect digital input from copper sheets. when it is grounded, the copper sheet will be in a neutral connection. For that reason, we have connected one finger's sheet to the ground connection, technically that finger will be giving low-value input. Other fingers will be set to high values by connecting them to the input pins of the microcontroller. High-value sheet when connected to a low value, will also become low. this property has been used in our project. We have developed code for our project based on these high-low values.

We have used a three-axis accelerometer ADXL 335 in our project. It is a sensor that measures the acceleration of the body. Acceleration is nothing but a change in speed for the body over time. Thus, it measures the dynamic nature of things. For this reason, we have used an accelerometer in our project. There are products available for static gesture recognition, but for dynamic gesture recognition, products have not been developed yet. Accelerometer gives three axis analog data. If we keep the accelerometer in one axis, then the values of those axis will only change other axies are kept as it is. In this way only, the accelerometer's direction or axis are found.

There are different types of microcontrollers available in the market and one among them is the Arduino board. In Arduino also, there are various types of microcontrollers are there like mega, uno, nano, etc. Firstly, we tried with the Arduino UNO board and later we found Arduino Nano has more input pins compared to Nano. So, we replaced UNO board with Nano board which also helps in proper space utilization.

To make a connection of an Arduino board with any android device, what require is bluetooth module. HC-05 is the Bluetooth module which has been used. The connection status is indicated by its red LED. In the range of 10 meters, the data transfer speed of HC-05 module may vary up to 1Mbps. To share data with the smartphone, it has to be connected to the HC-05 Bluetooth module, smartphone requires Bluetooth terminal application for transmitting and receiving data. We have used that kind of Bluetooth terminal application in our project too.

The voice module that we used is APR 33A3 which takes the input from the microcontroller and produces the voice through the speaker connected to it. It has got eight pins. We can produce 8 different voice outputs. It works in two modes, record and play mode. We need to record the required voices first, and then we can use them for our project. So, in the same, we trained 5 voices and gave those voices as output for five gestures.

4.1 System Overview

4.1.1 System Block Diagram

Our system block diagram is shown in below figure 4.2. The copper sheets and accelerometer sensor will give input to the microcontroller. Each finger of the left hand is mounted with copper sheets. Four of them are used to give input, fifth one is connected to the ground pin of the nano board. Bluetooth BLE module is used to connect the other devices to the Arduino board. Four copper sheets will give digital outputs as 0 or 1and the accelerometer will give three input data. When each gesture is performed, these data are analyzed and compared to identify which gesture is performed. From copper sheets and accelerometers, both static and dynamic gestures can be identified. In our project, five copper sheets have been used as each finger of the left hand is used when we do a gesture. Those data along with accelerometer values are sent to the microcontroller. It will process and gives out a string as output. That string can be displayed in the Android Bluetooth application as well as the voice output is generated in the Android application only. The application which we have used will pronounce the text displayed on the phone when the correct gesture is performed.

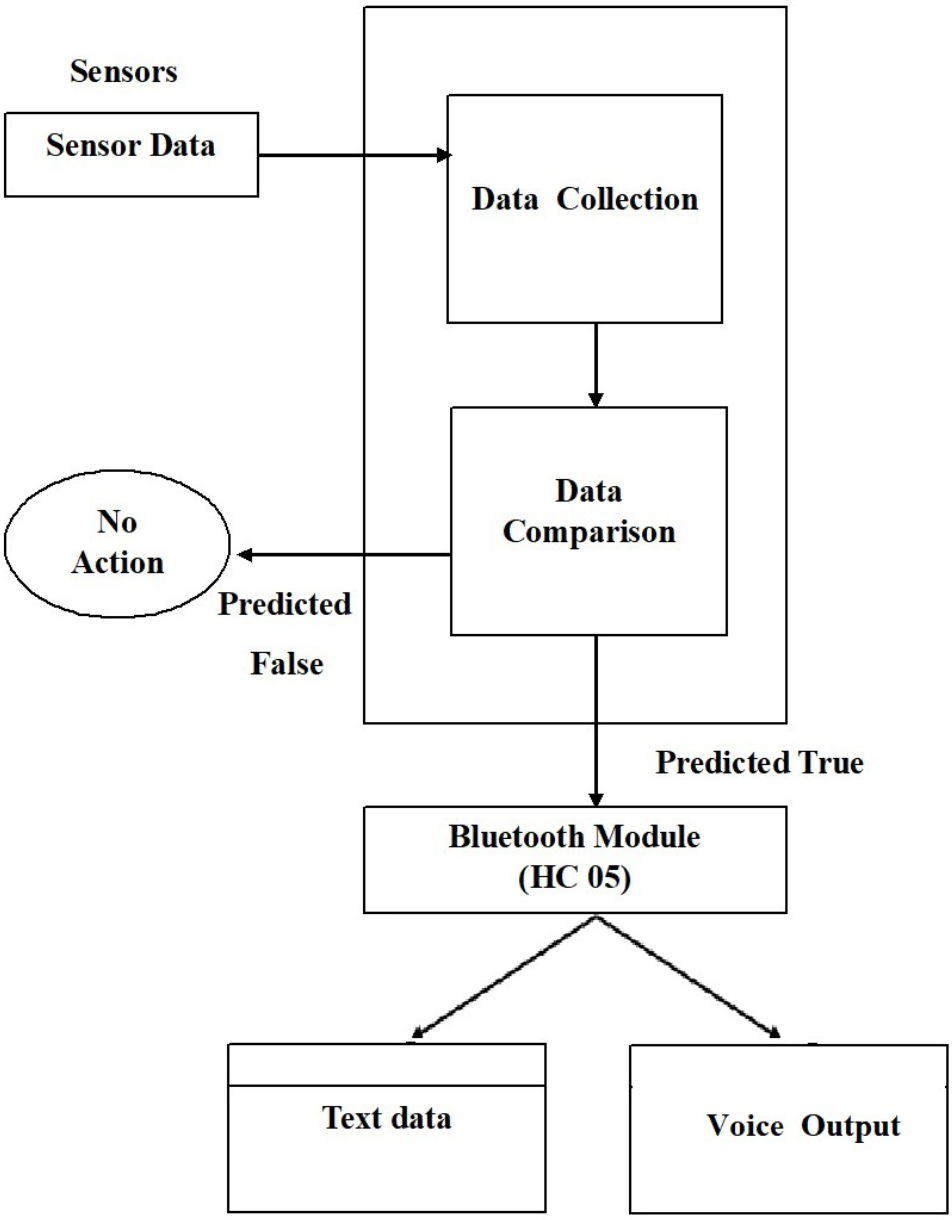

Figure 4.1: System block diagram

4.1.2 Data Flow Diagram

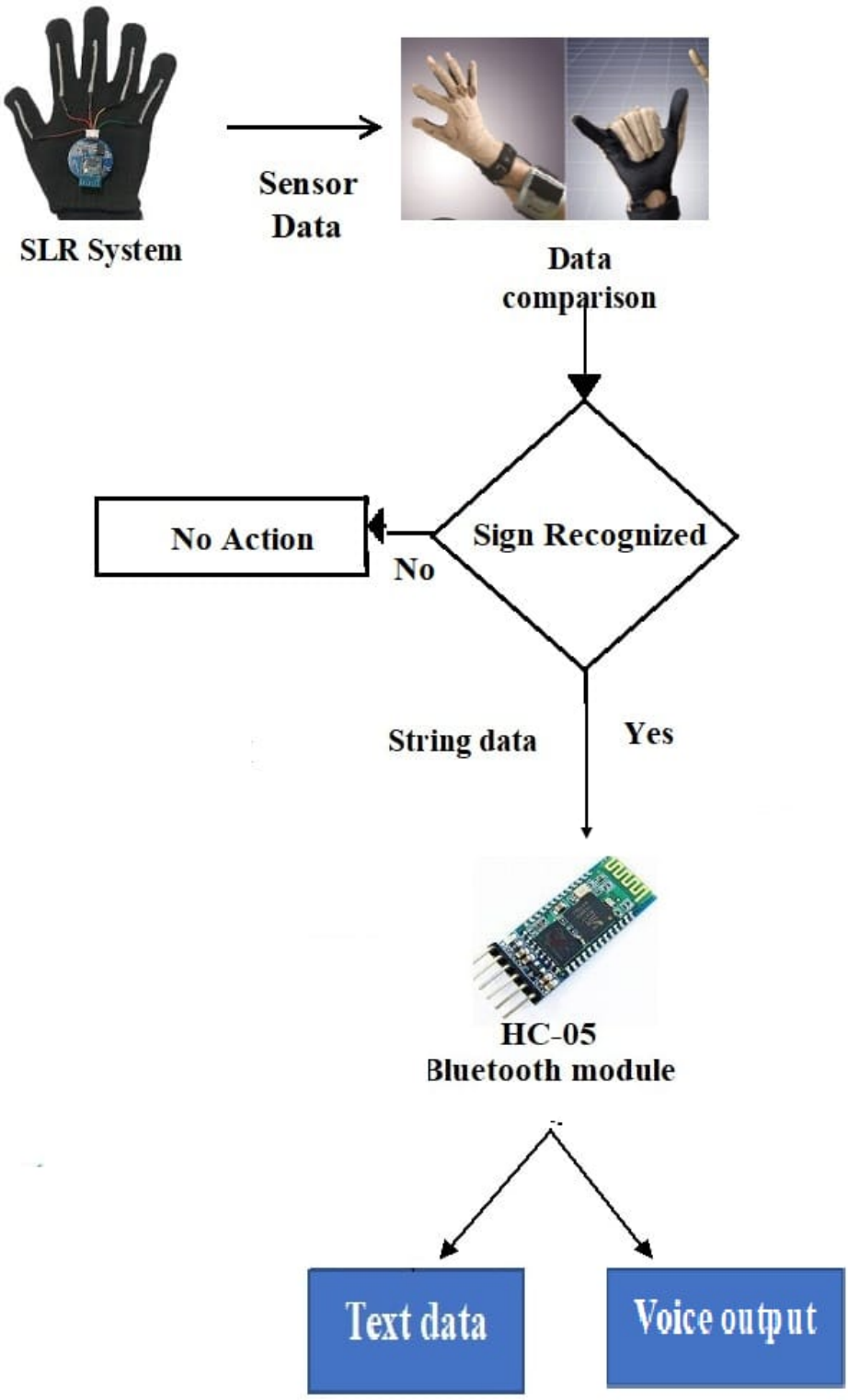

Figure 4.2: Data flow diagram

- From the above Figure 4.2, firstly, the user needs to wear the glove and he/she needs to perform the gesture in any of the five direction, by touching other fingers with the thumb finger. In that way, sensor data are gathered from fingers and accelerometer.
- Copper sheets will give 0 input when it touches the ground connection. So when they are in rest state, it will be giving input as 1 as it will not touching anything. when thumb copper sheet touches other copper sheets, it will give low inout. Accelerometer has three axes and thus will be having 6 directions. But we have used the five directions to make the combinations with finger movements. Accelerometer gives analog value input that ranges of varying data. The one direction which we did not use will be the rest state for the accelerometer.
- When the user does the gesture if he uses any mentioned five directions and touches any one finger among index, middle, ring, and little finger, is considered as a correct gesture.
- When the user does the proper gesture, the corresponding string data is generated in the microcontroller.
- Microcontroller will give string data as output. Through the Bluetooth module that data is moved to the Android app to display that text and speech.
- If he is doing wrong gestures, the output won't appear on Android app. At that time, he/ she needs to repeat the gesture again properly.

4.1.3 Ciruit Diagram

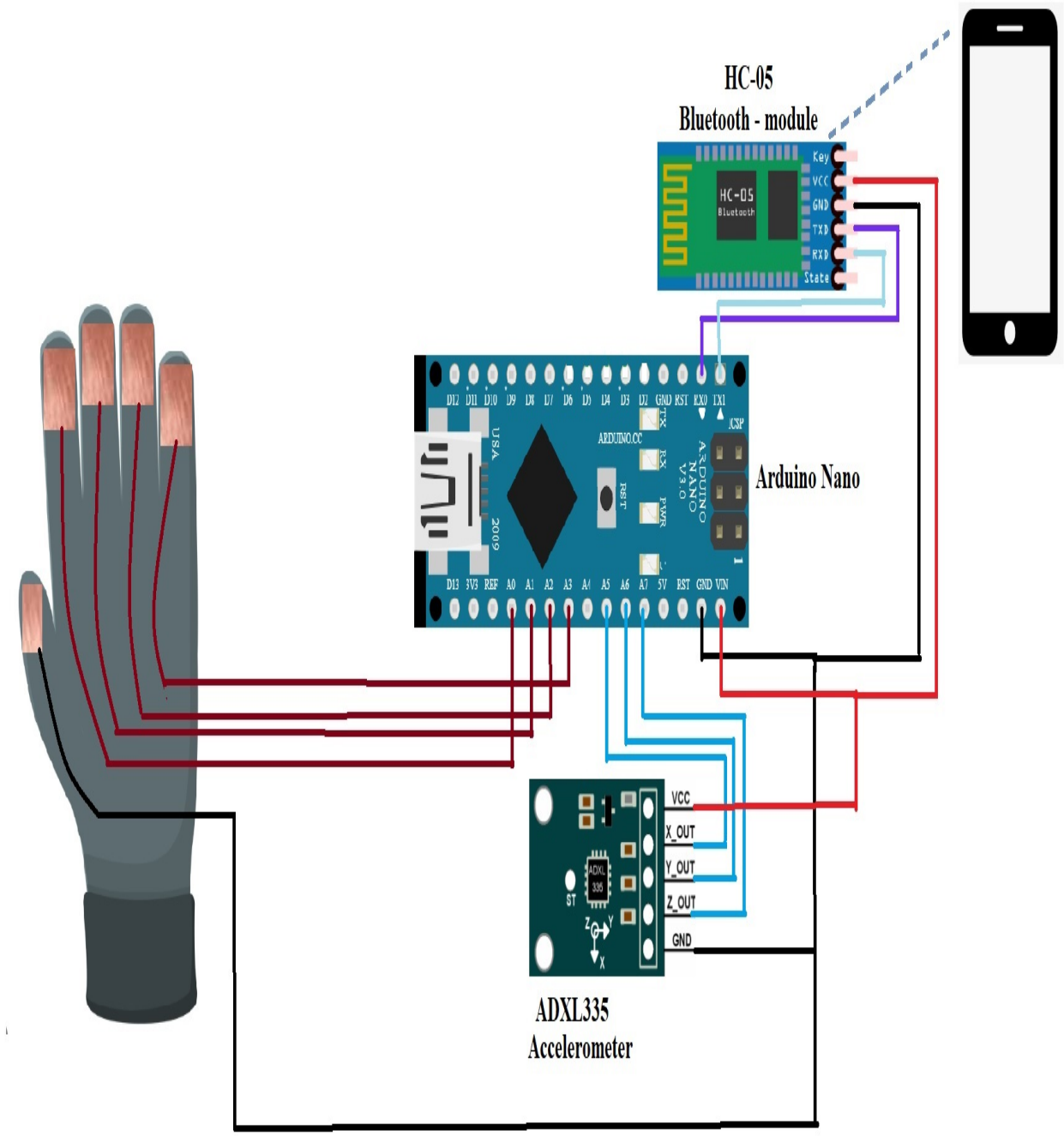

Figure 4.3: Circuit diagram of our proposed project

Above figure 4.3, shows the circuit connection of our project. We have used an Arduino nano microcontroller, copper sheets, an accelerometer, a Bluetooth module, a voice module and speaker.For the left hand, we are supposed to wear glove. On that glove, five copper sheets are mounted as shown in the figure. The thumb copper sheet is connected to the ground pin i.e. VCC pin of the Arduino nano board. The other four finers, index, middle, ring, and little fingers are connected to A0, A1, A2, and A3 pins of nano board respectively. In this way, Glove is connected to the Arduino nano board. Accelerometer is also connected to nano board. Three axes of it are indicated by three pins. Those three pins, xpin, ypin, and zpin are connected to A5, A6, and A7 pins of nano board. And Ground connection is made with both the accelerometer and nano board. In this way, Accelerometer is also connected to the nano board. The next part is the Bluetooth module. That will connect Android devices wirelessly. Tx and Rx pins of the Bluetooth module are connected to the Rx and Tx pins of the Arduino nano board respectively. Those are transmit and receive data pins. Thus we can make the connection with the Bluetooth module as well as the Nano board. The output is generated as text and voice from the Android application which is connected through Bluetooth application. In this way, we have connected hardware as shown in the above figure.

4.1.4 Usecase Diagram

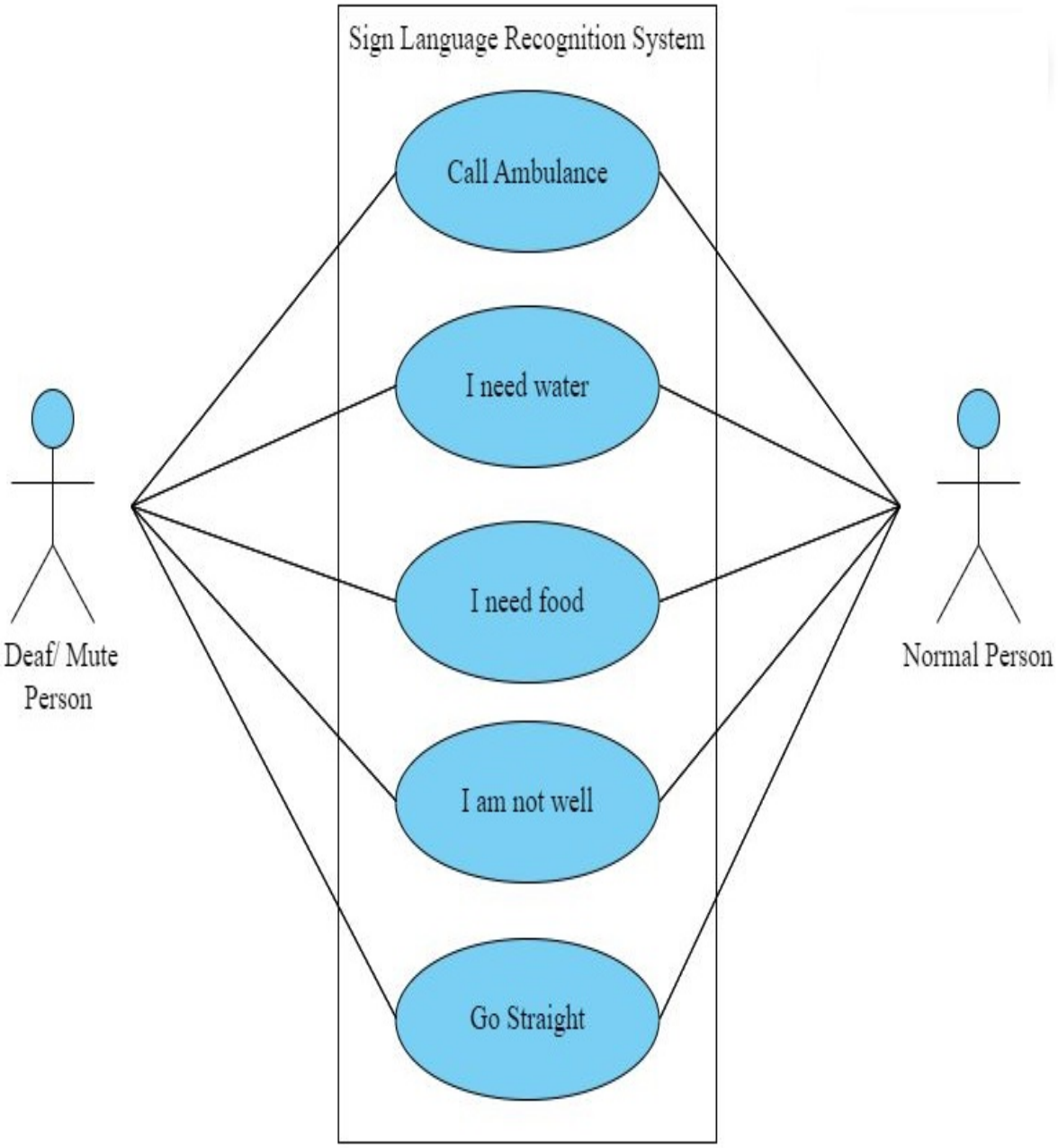

Figure 4.4: Usecase diagram

- From the below Figure 4.4, we can analyze the use case specifications of our project. Our product provides service to deaf-mute users to normal end users.
- Anyone or deaf-mute people need to wear the glove and do gestures that are predefined.
- For twenty different gestures, we have assigned twenty different sentences namely, "Call Ambulance", "I need Food", "I need water", "I am not well",and "Go straight".
- User is supposed to do the specified gestures in the correct direction, then only a predefined outcome can come.
- For example, the user wears the glove, then holds his left hand on the x-axis and touches his thumb finger with his fore-finger, the android application will produce the voice output as "Call Ambulance" as well as text.
- In the same way, by doing predefined correct gestures, normal people can get the gestures by voice and text outputs.
- This system works in the flow, where the user touches any one of the fingers with the thumb in any five directions mentioned, and it will produce twenty different sentences.
- This use case diagram shows the usage of our product. As for now, as our project is a prototype, it can only produce twenty different outputs with twenty gestures.

4.1.5 Sequence Diagram

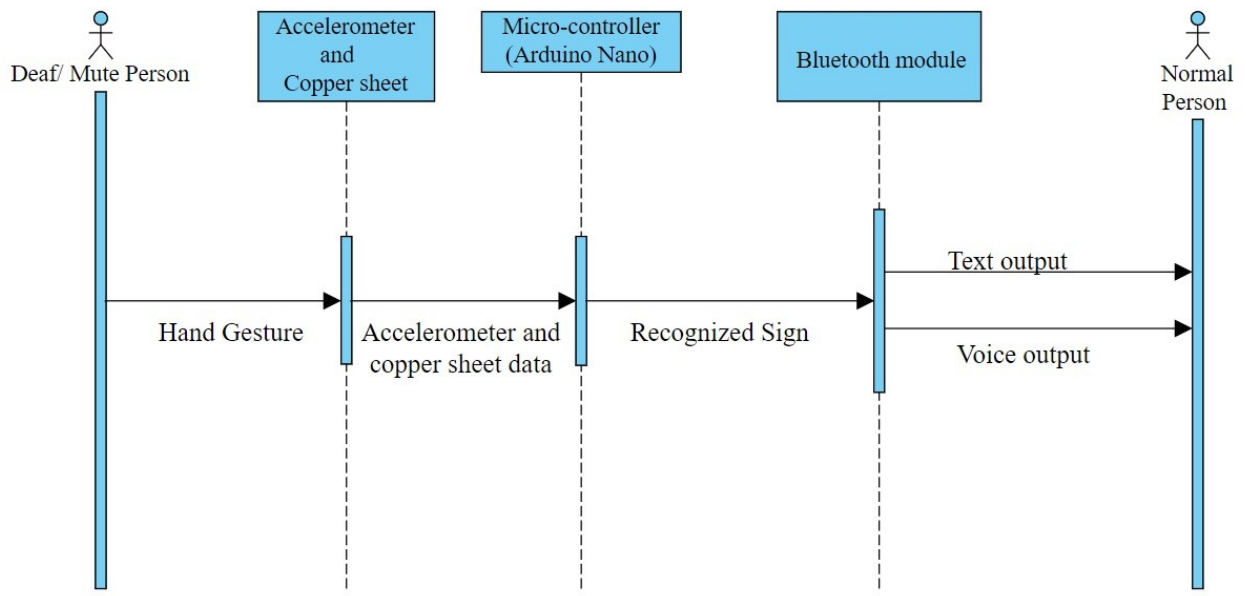

Figure 4.5: Sequence diagram

- Below Figure 4.4 depicts the traversal and processing of gestures in each phase of the project.
- The first phase of our project is the Accelerometer and copper sheet sensors. They are placed on the glove which will give those sensor's inputs.
- Next phase is a microcontroller, Inside which the processing of sensed data will happen. In this phase, for the performed gesture arduino nano will assign a sentence if it is a correct gesture.
- We have assigned one direction of the accelerometer as rest state, so in that direction we can keep our product is the nonworking state.
- Those assigned values need to be pronounced displayed as text in the Android device through Bluetooth device. This is the next phase.
- Thus, at last, the end user (normal person) will get text and voice output in the last phase.

Chapter 5

Implementation

5.1 Implementation Platform

5.1.1 Hardware

1. Processor: Intel core
2. RAM: 6GB
3. Storage: 256 GB

5.1.2 Software

1. Operating System: Windows 7 or higher,
2. Software Used: Arduino IDE, Android studio
3. Programming Languages: Embedded C, java

5.2 Implementation Details

5.2.1 Hardware Implementation

1. Hardware Setup: Connect the five copper sheets to the Arduino Nano, ensuring proper pin connections and voltage levels. We need to connect the accelerometer module to the Arduino Nano to detect wrist movements accurately that is dynamic gestures.In the next step, we have integrated the 8-pins voice module with the Arduino Nano for the output, enabling it to produce voice output based on the detected gestures.Then we have to connect the Bluetooth module (HC-05) to the Arduino Nano by their Tx and Rx pins to establish serial communication with the Android application.

2. Software Development: Write the necessary code in Arduino IDE to read sensor values from the copper sheets and accelerometer. Then we implemented the logic to identify finger movements and dynamic movements based on the sensor data. By using the voice module library , we have generated the voice output corresponding to the recognized gestures. Develop an Android application that establishes a Bluetooth connection with the Arduino Nano for text output display.

3. Gesture Recognition: Calibrate the copper sheet sensors to obtain accurate digital data . Define appropriate threshold values and ranges for identifying different gestures. By Analyzing the sensor data in real-time and determining the corresponding gesture based on the predefined thresholds and ranges we have developed our product.

4. Voice and Text Output: We have utilized the voice module to convert the identified gestures into voice output, allowing users to receive audible feedback. Establish a Bluetooth connection between the Arduino Nano and the Android application. Nano board will send the recognized gestures' text representation to the Android application via Bluetooth module that is HC-05. Received text output will be displayed on the Android application's user interface, providing a visual means of communication for normal people.

5.2.2 Implementation Workflow

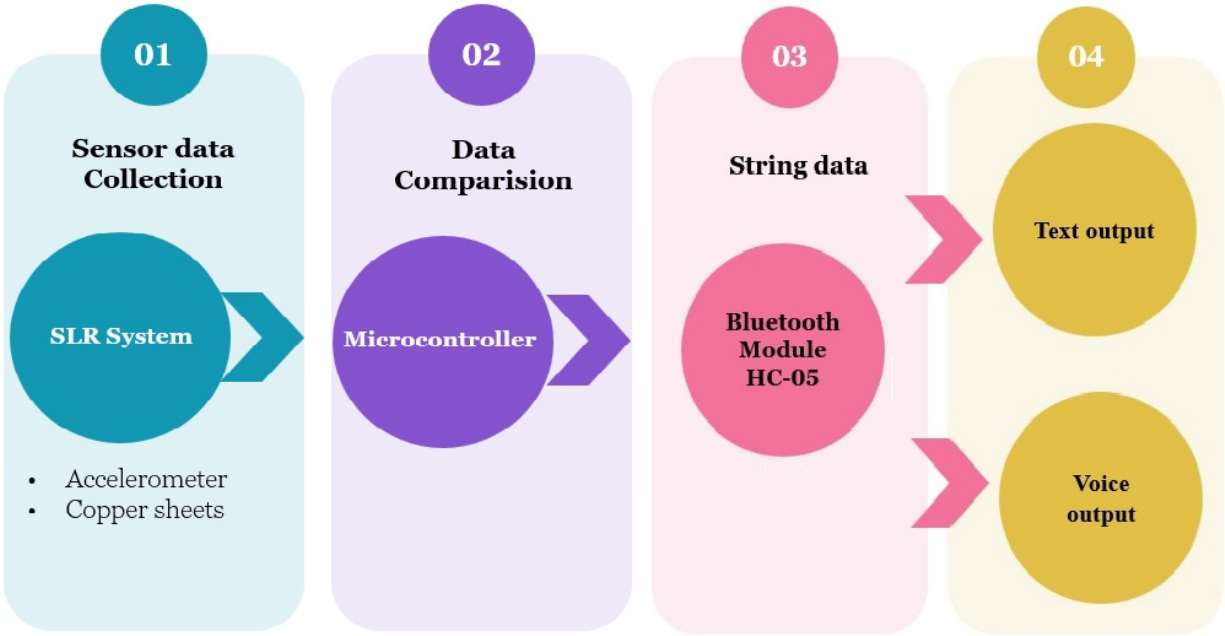

Figure 5.1: Implementation diagram

- Stage 1: In our project, we have used 5 copper sheets for five fingers of the left hand to identify static gestures and an accelerometer for dynamic gestures. All these sensors are mounted on top of the glove. A sensory connection with the microcontroller is done to collect the data when the user does gestures.

- Stage 2: Copper sheets will give digital outputs that is either 1 or 0. All five fingers of the left hand are mounted with copper sheets. Four among them, that is the index finger, middle finger, ring finger, and little fingers are used to give inputs. The thumb finger will be connected to the ground. We have used a three-axis accelerometer with three pieces of data that is x, y, and z-axis. And those data are in analog form. Thus seven types of data can be used to identify a gesture. Some gestures may use one or two-axis data of the accelerometer only. In this way, collected data are studied for each gesture.

- Stage 3:For each gesture, data have been collected from different people. A different group of people wore the glove and asked to do a gesture. In this way, we found that a range of data is used for doing the same gesture by different people. Each person is asked to perform the same gesture

in five different directions. So, 4 gestures in five different directions will give 20 gestures. Thus, for the different ranges of data of the same gesture are assigned with one sentence. So, each time the same output is produced by the microcontroller. The microcontroller will produce a string output.

- Stage 4: Collected data are compared and processed in the microcontroller. The microcontroller will produce a string output. Then the output need to be transfered to the voice module and Bluetooth for further processes. Bluetooth module will transfer the output data from the microcontroller arduino to other devices (Android device) and voice module. An Android app is connected to our hardware system through a Bluetooth module. The string is displayed in that app as text and it can be pronounced too. In this way, we are getting both voice and text outputs from a single application. For twenty gestures, both text and voice output is displayed in android devices.

5.3 Dataset

To create a dataset, we need to have data at the first stage. In our project we haven't used any dataset which is already present instead, we used the data coming from sensors and studied them. Those sensor data are processed inside the microcontroller and then assigned to a string value. We have attached copper sheets on each finger and that would give the output in digital form either high (1) or low (0). Among 5 fingers, only 4 fingers' data are used to do the combination with the accelerometer sensor. Accelerometer sensor, it will give three input data as it is three-axis accelerometer. For dynamic movement of hand, an accelerometer sensor have been used. Thus seven datas are used to analyse a single gesture. Not necessarily each data must contribute to each gesture. For some gestures, only a few data may be required for some others all seven data may be required. In Arduino, by doing all these comparisons, for a gesture a string value will be generated. Those strings are Call Ambulance, I need water, I need food, I'm not well, Go straight. We have included 20 gestures to give out these 20 outputs. In this way, in our project, we have used sensor data.

Chapter 6

Testing

We developed a device which is in the form of glove, which includes an Accelerometer, Copper sheets, Arduino nano, and a Bluetooth module. That could be worn by any person and perform gestures, we started testing by taking input by several people, as each person has a different size and way of expressing gestures so we took input from 10 people and device worked well on all of them. and we did testing by including different sensors, such as copper sheets, IMU and accelerometer but we got the required output without IMU, so to reduce the space occupied on hand IMU was removed at the end, and We replaced Arduino Uno with Arduino Nano as it is small in size. Our product finally was having accelerometer for dynamic gestures, copper sheets to do finger movements, bluetooth module to connect android application and voice module to give voice output. Out of ten people , each one had to perform twenty gestures and in this way tested the outputs and trained them. No algorithms are used, but the combinations finger copper sheets and accelerometer are used to generate the output properly. Then they are tested on different type of people.

Chapter 7

Experimentation and Results

7.1 Experimentation

Our device includes Arduino as the microcontroller of the system, which is connected to 5 copper sheets to give digital output, and Accelerometer is connected to identify dynamic movements, Voice module is connected to produce voice output and we have included a Bluetooth module for serial communication with an android application where we display our text so that people who can not hear can understand the communication. We did Experiment with multiple people with multiple angles and with many combinations of sensors, to recognize gestures and as a result, now we can recognize 5 gestures which are "I need help", " Call an ambulance", " I need Water", " I'm not feeling well" and another to stop communication. as this a prototype for our project, we have used only twenty different sentences with twenty gestures on the left hand.

7.2 Results

We have successfully implemented a project which can identify Sign language gestures and can give output in Text and Voice. Copper sheets and Accelerometer is connected to identify wrist movements,We have included a Bluetooth module for serial communication with an Android application where we display our text so that people who can not hear can understand the communication. and We can identify twenty gestures which are "I need food", " Call an ambulance", " I need Water", " I'm not feeling well", "What is the time", "Can I come with you", "How was the day", "Where are you going", "Welcome", "Right", "Left","Please call the police", "Who are you", "How are you", "I am good thank you", "Hello", "Go straight", "Sorry", "Yes", "No" and another to stop communication.

Below figure 7.1 depicts the different axes of the accelerometer i.e. x, y, and z axis respectively. We have used a three-axis accelerometer (ADXL 335) in our project. These three axes can give six directions. Among which five directions are used. One direction is set to indicate the nonworking state. In an accelerometer, if it is set to any one direction, the analog values of that axis will change. We have assigned 2 different directions for each axis by considering certain range.

Figure 7.1: Diagram depicting three axes of accelerometer on the glove

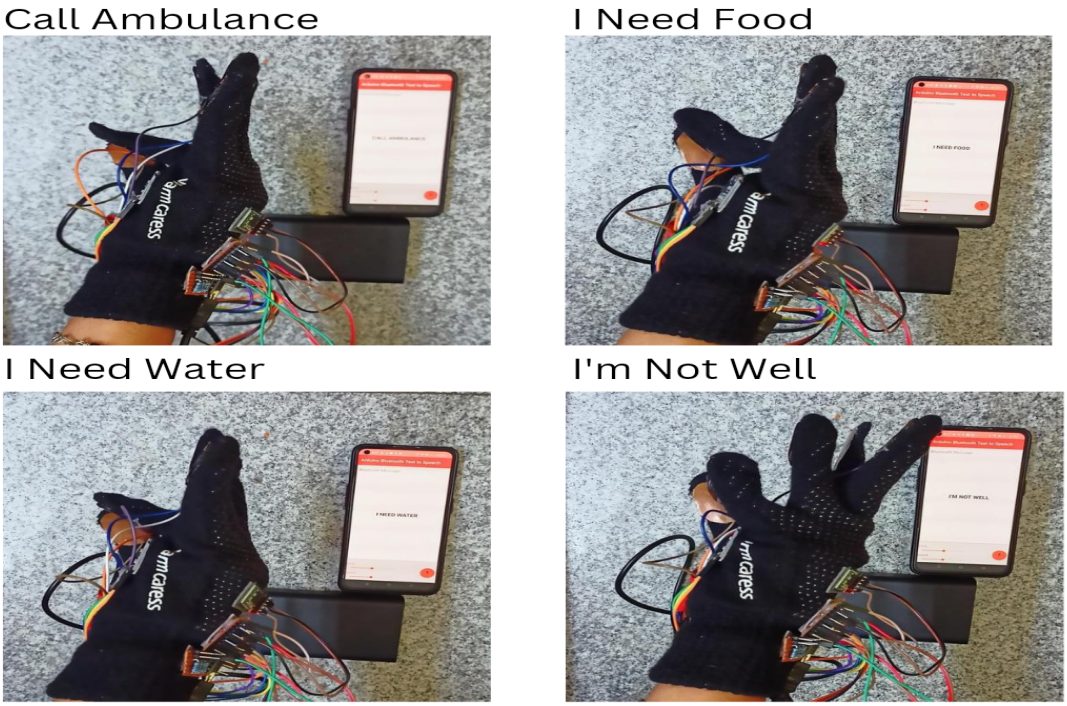

Figure 7.2: Gestures performed in x-axis less than 300

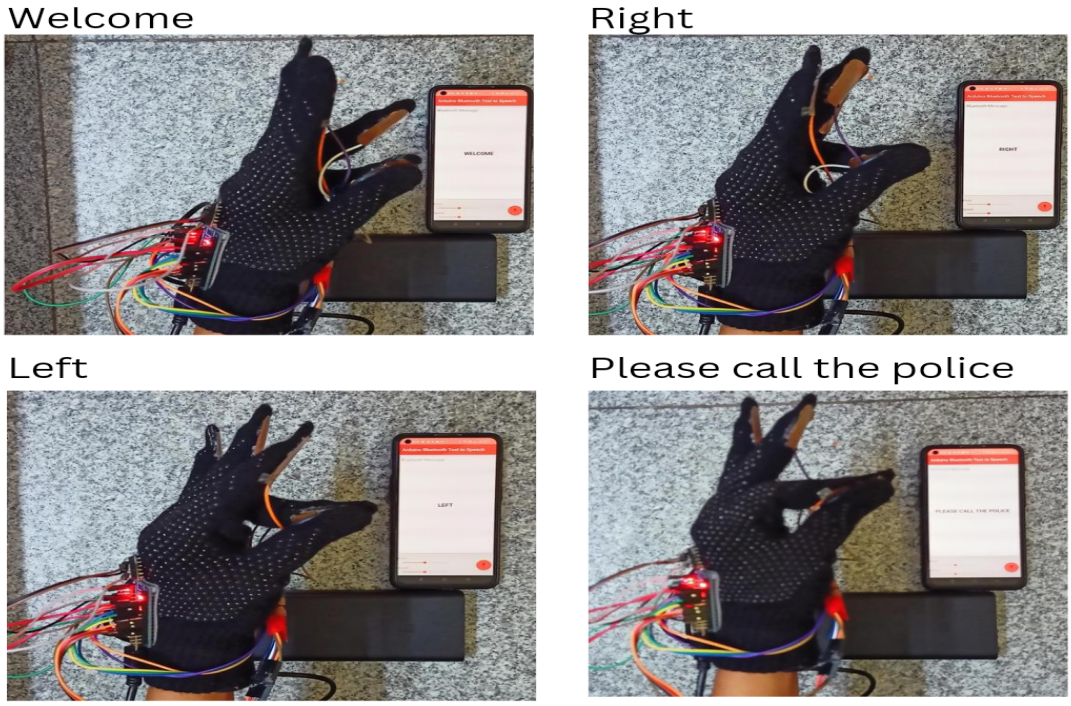

Figure 7.3: Gestures performed in x-axis greater than 400

As mentioned earlier, for the x-axis two directions are considered. If the range of x-axis values lies less than 300, it will be one direction. In the figure below 7.2, we can see the four gestures performed in this direction. If we keep our hand as seen in the below figure, and touch the thumb with any one of the fingers, for example, the middle finger. The corresponding output is produced which is "I need food". If we touch the thumb with the forefinger, the corresponding output is produced which is "Call Ambulance".If we touch the thumb with the ring finger, the corresponding output is produced which is "I need water".If we touch the thumb with a little finger, the corresponding output is produced which is "I am not well". These four outputs can be displayed in Bluetooth applications in the phone and also pronounced.

In the same way, in the x-axis, if its value lies in more than 400, the below gestures can be seen. Below figure 7.3 depicts the same thing. Here the user is required to hold his hand as shown in Figure 7.3. He has to do the gesture in this direction and needs to do the gestures, for example, touching his index finger with thumb. Thus this position of fingers will give 0 as input. Text output will be displayed in the Bluetooth application as "Please call the police". If we touch the thumb with the middle finger, the corresponding output is produced which is "Left". If we touch the thumb with the ring finger, the corresponding output produced is "Right".If we touch the thumb with the little finger, the corresponding output is produced which is "Welcome".These four outputs can be displayed in Bluetooth application in the phone.

There are 3 axes in the accelerometer, we have already explained what will happen in the x-axis. Figure 7.4 will depict gestures performed in one of the directions of the y-axis. If the left hand is kept as in Figure 7.4, the analog values of the y-axis will change. We have considered the range of values less than 300 in the y-axis as one direction.If we touch the thumb with the forefinger, the corresponding output is produced which is "Hello".If we touch the thumb with the middle finger, the corresponding output is produced: "How are you".If we touch the thumb with the ring finger, the corresponding output is produced which is "I am good, thank you". If we touch the thumb with the little finger, the corresponding output produced is "Who are you". These four outputs can be displayed in the Bluetooth application in the phone.

In Figure 7.5, gestures of other direction in the y-axis is displayed. Those actions are performed by keeping our hand in that way as shown in Figure 7.5. In this direction also, the user needs to perform gestures by touching the thumb to other fingers. The corresponding output is produced for that gesture. If we touch the thumb with the index finger, the corresponding output produced is "Where are you going". If we touch the thumb with the middle finger, the

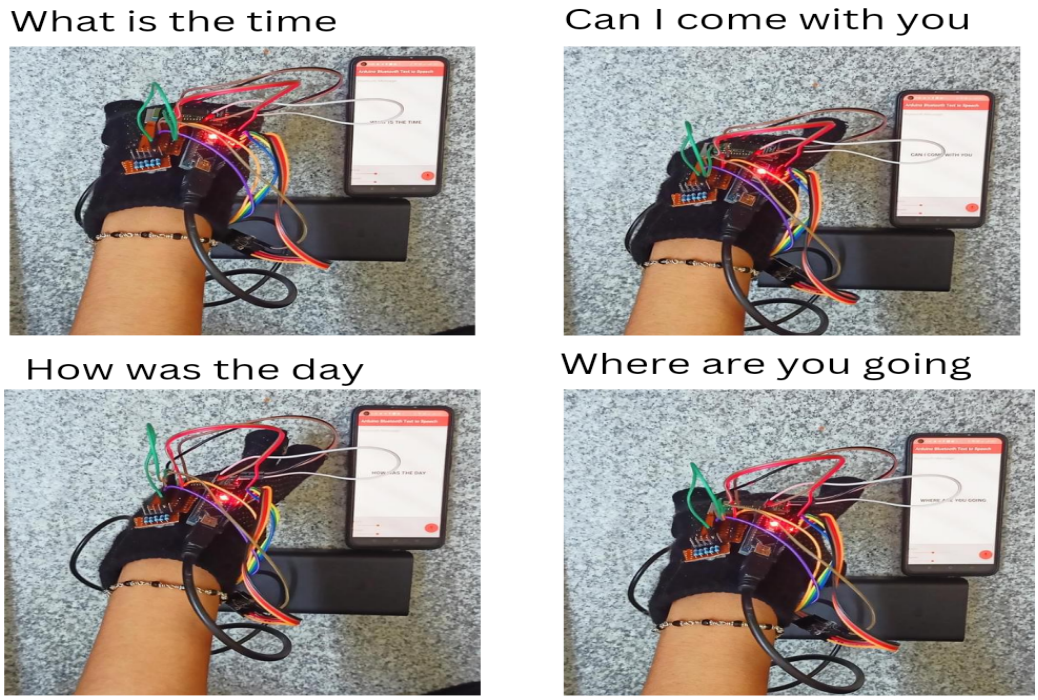

Figure 7.4: Gestures performed in y-axis less than 300

Figure 7.5: Gestures performed in y-axis greater than 400

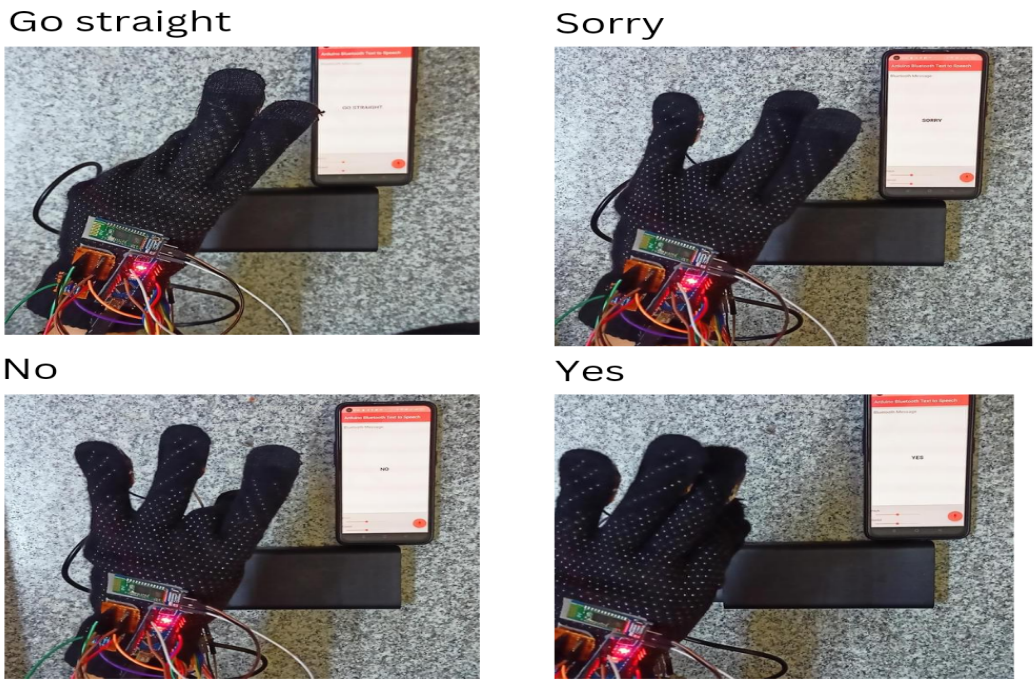

Figure 7.6: Gestures performed in y-axis less than 300

corresponding output produced is "What is the time". If we touch the thumb with the ring finger, the corresponding output produced is "Can I come with you". If we touch the thumb with the middle finger, the corresponding output produced is "How was the day". These four outputs can be displayed in the Bluetooth application on the phone.

In the z-axis, we have considered one direction for gesture analysis and another for rest state indication. If we keep our hand on the z-axis, the analog values of that axis will vary. if that range lies in the range less than 325, it will show the sentences for those gestures. Figure 7.6 is depicting the same. If we touch the thumb with the index finger, the corresponding output produced is "Yes". If we touch the thumb with the middle finger, the corresponding output produced is "No". If we touch the thumb with the ring finger, the corresponding output produced is "Sorry".If we touch the thumb with the ring finger, the corresponding output produced is "Go straight". These four outputs can be displayed in Bluetooth application in the phone and the last output is produced as voice through speaker.

Chapter 8

Conclusion

Our project involved the design and implementation of an IoT device that included "An Arduino Nano microcontroller", the device also includes sensors such as an Accelerometer and copper sheet metal and a voice module with Bluetooth module (HC-05) to recognize gestures and help in communication with people who are unable to listen or speak. As gesture involves both fingers as well as wrist movements. W e have used accelerometer to identify wrist movements, at the end we have considered the input from both the sensor to identify gestures. Furthermore, we have also included a Bluetooth module in our project, which helps establish connections between Android applications. Using these connections, we can transmit the recognized gestures from the Arduino Nano to an Android application, and there we can give the output in text form, which provides a visual means of communication for people with hearing impairments. The successful implementation of the project enables communication for individuals with hearing impairments and also for the person who is unable to speak. By combining gesture recognition, voice output, and text display, we have created a comprehensive solution. The IoT device brings a step forward in filling the gap between society and technology, creating a positive impact on many lives, and providing equal opportunity to everyone. The current system can recognise 20 gestures and the output is given in text and voice form. We can improve the user experience by including words that can be used to form sentences rather than giving specific sentences. We can also replace the voice module with an MP3 module that can give N number of outputs and that consumes less space, costs less money, and has significantly better durability. or, we can use a different strategy. Instead of needing a separate piece of hardware to provide speech output, an android app may include a function that reads sentences provided by a Bluetooth module.

References

[1] Vishal Pathak, Sushant Mongia, Gaurav Chitranshe “A Framework for Hand Gesture Recognition based on fusion of Flex, Contact and Accelerometer Sensor”, in 2015 Third International Conference on Image Infonnation Processing,2015.

[2] X. Chu, J. Liu and S. Shimamoto, "A Sensor-Based Hand Gesture Recognition System for Japanese Sign Language," 2021 IEEE 3rd Global Conference on Life Sciences and Technologies (LifeTech), Nara, Japan, 2021.

[3] Ahmed, Syed Shahbaaz, "Low-cost wearable gesture recognition system with minimal user calibration for ASL." 2019 International Conference on Internet of Things (iThings) and IEEE Green Computing and Communications (GreenCom) and IEEE Cyber, Physical and Social Computing (CPSCom) and IEEE Smart Data (SmartData), pp. 1080-1087.IEEE, 2019.

[4] X. Zhang, X. Chen, Y. Li, V. Lantz, K. Wang and J. Yang, "A Framework for Hand Gesture Recognition Based on Accelerometer and EMG Sensors," in IEEE Transactions on Systems, Man, and Cybernetics - Part A: Systems and Humans, vol. 41, no. 6, pp. 1064-1076, Nov. 2011.

[5] Karly Kudrinko,"Wearable Sensor-Based Sign Language Recognition: A Comprehensive Review"2020,IEEE Reviews in Biomedical Engineering 14 (2020): 82-97.

[6] S. S. Hazari, Asaduzzaman, L. Alam and N. A. Goni, "Designing a sign language translation system using kinect motion sensor device," 2017 International Conference on Electrical, Computer and Communication Engineering (ECCE), 2017, pp.344-349

[7] D. Naglot, “Real Time Sign Language Recognition using the Leap Motion Controller,” pp. 1–5, 2017.

[8] Himanshu Gupta, Aniruddh Ramjiwal, Jasmin T. Jose "Vision-Based Approach to Sign Language Recognition" June 2018 International Journal of Advances in Applied Sciences 7(2):156/ijaas.v7.i2.pp 156-161 LicenseCC BY-NC 4.0.

[9] Sakshi Sharma “Vision-based sign language recognition system: A Comprehensive Review”, 2020 Proceedings of the Fifth International Conference on Inventive Computation Technologies (ICICT-2020).

[10] Ahmed, Washef, Kunal Chanda, and Soma Mitra. "Vision-based hand gesture recognition using dynamic time warping for Indian sign language." 2016 international conference on information science (ICIS). IEEE, 2016.

[11] Y. Huang, D. Monekosso, H. Wang and J. C. Augusto, "A Hybrid Method for Hand Gesture Recognition," 2012 Eighth International Conference on Intelligent Environments, Guanajuato, Mexico, 2012, pp. 297-300

[12] X. Zhang, X. Chen, Y. Li, V. Lantz, K. Wang and J. Yang, "A Framework for Hand Gesture Recognition Based on Accelerometer and EMG Sensors," in IEEE Transactions on Systems, Man, and Cybernetics - Part A: Systems and Humans, vol. 41, no. 6, pp. 1064-1076, Nov. 2011.

[13] A. Akl, C. Feng and S. Valaee, "A Novel Accelerometer-Based Gesture Recognition System," in IEEE Transactions on Signal Processing, vol. 59, no. 12, pp. 6197-6205, Dec. 2011.

[14] R. Xie and J. Cao, "Accelerometer-Based Hand Gesture Recognition by Neural Network and Similarity Matching," in IEEE Sensors Journal, vol. 16, no. 11, pp. 4537-4545, June1, 2016.

[15] O. R. Chanu, A. Pillai, S. Sinha and P. Das, "Comparative study for vision based and data based hand gesture recognition technique," 2017 International Conference on Intelligent Communication and Computational Techniques (ICCT), 2017, pp. 26-31.

[16] S. Benatti et al., "A Versatile Embedded Platform for EMG Acquisition and Gesture Recognition," in IEEE Transactions on Biomedical Circuits and Systems, vol. 9, no. 5, pp. 620-630, Oct. 2015.

[17] J. Wu, L. Sun and R. Jafari, "A Wearable System for Recognizing American Sign Language in Real-Time Using IMU and Surface EMG Sensors," in IEEE Journal of Biomedical and Health Informatics, vol. 20, no. 5, pp. 1281-1290, Sept. 2016.

[18] D. Bal, A. M. Arfi and S. Dey, "Dynamic Hand Gesture Pattern Recognition Using Probabilistic Neural Network," 2021 IEEE International IOT, Electronics and Mechatronics Conference (IEMTRONICS), 2021, pp. 1-4.

[19] A. K. Panda, R. Chakravarty and S. Moulik, "Hand Gesture Recognition using Flex Sensor and Machine Learning Algorithms," 2020 IEEE-EMBS Conference on Biomedical Engineering and Sciences (IECBES), 2021, pp. 449-453.

[20] L. -J. Kau, W. -L. Su, P. -J. Yu and S. -J. Wei, "A real-time portable sign language translation system," 2015 IEEE 58th International Midwest Symposium on Circuits and Systems (MWSCAS), 2015, pp. 1-4.

[21] H. Shaheen and T. Mehmood, "Talking Gloves: Low-Cost Gesture Recognition System for Sign Language Translation," 2018 IEEE Region Ten Symposium (Tensymp), 2018, pp. 219-224

[22] D. Naglot, “Real Time Sign Language Recognition using the Leap Motion Controller,” pp. 1–5, 2017.

[23] M. Elmahgiubi, M. Ennajar, N. Drawil and M. S. Elbuni, "Sign language translator and gesture recognition," 2015 Global Summit on Computer and Information Technology (GSCIT), 2015, pp. 1-6.

[24] H. Sekar, R. Rajashekar, G. Srinivasan, P. Suresh and V. Vijayaraghavan, "Low-cost intelligent static gesture recognition system," 2016 Annual IEEE Systems Conference (SysCon), 2016, pp. 1-6.

[25] S. S. Hazari, Asaduzzaman, L. Alam and N. A. Goni, "Designing a sign language translation system using kinect motion sensor device," 2017 International Conference on Electrical, Computer and Communication Engineering (ECCE), 2017, pp. 344-349.

[26] T. -Y. Pan, C. -Y. Chang, W. -L. Tsai and M. -C. Hu, "Multisensor-Based 3D Gesture Recognition for a Decision-Making Training System," in IEEE Sensors Journal, vol. 21, no. 1, pp. 706-716, 1 Jan.1, 2021.

[27] C. Nasrany, R. B. Abdou, A. Kassem and M. Hamad, "S2LV — A sign to letter and voice converter," 2015 International Conference on Advances in Biomedical Engineering (ICABME), 2015, pp. 185-188.

[28] Louis, Leo. (2018). “Working Principle of Arduino and Using it as a Tool for Study and Research.” International Journal of Control, Automation, Communication and Systems. 1. 10.5121/ijcacs.2016.1203.

[29] Alapati, Sreejan, Yeole, Shivraj Narayan. (2017). “A Review on Applications of Flex Sensors. International Journal of Emerging Technology and Advanced Engineering.” 7. 97-100.

[30] Praveen Kumar, Amar Dhwaj, Ajim Hasan, Amit Prabhakar, “Design and development of a cost-effective flex sensors for recognition of international sign language through the motion of hand,” International Journal of Advances in Electronics and Computer Science, ISSN: 2393-2835 Volume-5, Issue-2, Feb.-2018

[31] Ankush Subhash Mestry, Adesh Rahane, Suyog Sankhe, Sumit Sonawane, Supriya Dicholkar," Hand gesture vocalizer", International Research Journal of Engineeringand Technology (IRJET) ,Volume: 09 Issue: 04 | Apr 2022.

[32] Ganganna, Mamatha. (2021). “Smart Glove for the Disabled: A Survey.” CiiT International Journal of Programmable Device Circuits and Systems, Vol 13, No 2, February 2021.

[33] Rewari, Hardik, Dixit, Vishal, Batra, Dhroov, Nagaraja and Hema. (2018). “Automated Sign Language Interpreter.” 1-5. 10.1109/IC3.2018.8530658.

[34] N. Subhash Chandra1, T. Venu, P. Srikanth, “A REAL-TIME STATIC and DYNAMIC HAND GESTURE RECOGNITION SYSTEM, “International Journal of Engineering Inventions e-ISSN: 2278-7461, p-ISSN: 2319-649.

[35] Pavan Telluri, Saradeep Manam, Sathwic Somarouthu, Jayashree M Oli, Chinthala Ramesh “Low-cost flex powered gesture detection system and its applications,” 2020 International Conference on Inventive Research in Computing Applications (ICIRCA-2020).

[36] Aastha Nagpal , Aqusa Noor , Ketaki Singha , Ashish Bagwari , Rakshita Gouri,Shamimul Qamarma “Helping Hand Device for Speech Impaired People,” 2020 Global Conference on Wireless and Optical Technologies (GCWOT).

[37] Mrs.NeelaHarish , Dr.S.Poonguzhali “Design and development of hand gesture recognition system for speech impaired people,” 2015 International Conference on Industrial Instrumentation and Control (ICIC) College of Engineering Pune, India. May 28-30, 2015.

[38] Quiapo, Carlos Emmanuel A. and Ramos, Katrina Nicole M. “Development of a Sign Language Translator Using Simplified Tilt, Flex and Contact Sensor Modules,” 2016 IEEE Region 10 Conference (TENCON) — Proceedings of the International Conference.

[39] Péter Mátételki, Máté Pataki, Sándor Turbucz, László Kovács “An assistive interpreter tool using glove-based hand gesture recognition,” 2014 IEEE Canada International Humanitarian Technology Conference - (IHTC).

[40] Suyash Ail , Bhargav Chauhan , Harsh Dabhi, Viraj Darji4,Yukti Bandi, “Hand Gesture Based Vocaliser for the Speech Impaired,” 2020, Proceedings of International Conference on Wireless Communication , 2020(pp.585-592)

DrillBit

The Report is Generated by DrillBit Plagiarism Detection Software

Submission Information

Author Name	Thejaswini S Acharya
Title	LET US TALK THROUGH GESTURE VOCALIZER
Paper/Submission ID	771120
Submission Date	2023-06-11 11:56:39
Total Pages	55
Document type	Project Work

Result Information

Similarity **14 %**

1 10 20 30 40 50 60 70 80 90

Sources Type

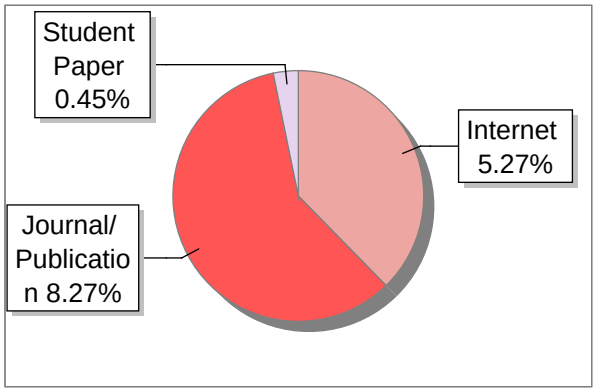

Report Content

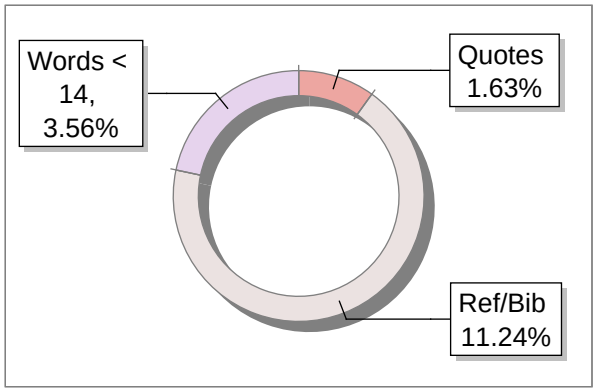

Exclude Information

Quotes	Not Excluded
References/Bibliography	Not Excluded
Sources: Less than 14 Words Similarity	Not Excluded
Excluded Source	**0 %**
Excluded Phrases	Not Excluded

A Unique QR Code use to View/Download/Share Pdf File

DrillBit

DrillBit Similarity Report

14	75	B	A-Satisfactory (0-10%) B-Upgrade (11-40%) C-Poor (41-60%) D-Unacceptable (61-100%)
SIMILARITY %	MATCHED SOURCES	GRADE	

LOCATION	MATCHED DOMAIN	%	SOURCE TYPE
1	A Hierarchical Hand Gesture Recognition Framework for Sports Referee Training-Ba by Pan-2020	1	Publication
2	An Easily Customized Gesture Recognizer for Assisted Living Using Commodity Mobi by Mezari-2018	1	Publication
3	Thesis Submitted to Shodhganga Repository	<1	Publication
4	Smart Innovation, Systems and Technologies Information and Communication Techn	<1	Publication
5	Low cost tangible glove for translating sign gestures to speech and text in Hindi language	<1	Student Paper
6	www.freepatentsonline.com	<1	Internet Data
7	csjournals.com	<1	Publication
8	www.dx.doi.org	<1	Publication
9	www.ijetae.com	<1	Publication
10	www.elprocus.com	<1	Internet Data
11	www.scribd.com	<1	Internet Data
12	www.mdpi.com	<1	Internet Data

13	1library.co	<1	Internet Data
14	www.amity.edu	<1	Internet Data
15	From Science 20 to Pharma 30 The semantic search in life sciences	<1	Publication
16	ACM Press the 24th International Conference - Marina del Ray, Califo	<1	Publication
17	healthdocbox.com	<1	Internet Data
18	ijpttjournal.org	<1	Internet Data
19	Thesis submitted to shodhganga - shodhganga.inflibnet.ac.in	<1	Publication
20	www.ijcaonline.org	<1	Publication
21	asbmr.onlinelibrary.wiley.com	<1	Internet Data
22	dochero.tips	<1	Internet Data
23	moam.info	<1	Internet Data
24	Thesis Submitted to Shodhganga, shodhganga.inflibnet.ac.in	<1	Publication
25	eproceeding.undiksha.ac.id	<1	Internet Data
26	moam.info	<1	Internet Data
27	files.eric.ed.gov	<1	Publication
28	Knowledge acquisition using VRML and the unified modelling language the case of by P-2000	<1	Publication
29	Sign Language Recognition Systems A Decade Systematic Literature Revi by Wadhawan-2019	<1	Publication
30	arxiv.org	<1	Publication
31	dsatm.edu.in	<1	Publication

32	qdoc.tips	<1	Internet Data
33	Thesis submitted to dspace.mit.edu	<1	Publication
34	mdpi.com	<1	Internet Data
35	moam.info	<1	Internet Data
36	Towards an Innovative Electrical Interface Standard for PocketQubes a, by Bouwmeester, J.; va - 2018	<1	Publication
37	IoT-F2N An energy-efficient architectural model for IoT using Femtole by Mukherjee-2019	<1	Publication
38	Thesis Submitted to Shodhganga, shodhganga.inflibnet.ac.in	<1	Publication
39	www.iaraedu.com	<1	Publication
40	asbmr.onlinelibrary.wiley.com	<1	Internet Data
41	ijircce.com	<1	Publication
42	IEEE 2012 8th International Conference on Intelligent Environments (by	<1	Publication
43	all4consolaws.org	<1	Internet Data
44	mdpi.com	<1	Internet Data
45	moam.info	<1	Internet Data
46	www.omicsonline.org	<1	Internet Data
47	369485e5-78d9-46958ee777e624124993.filesusr.com	<1	Publication
48	Developing a one-step triplet-repeat primed PCR assay for diagnosing myotonic dy by Lan-2018	<1	Publication
49	LISA Pathfinder data analysis, by Antonucci, F Arman- 2011	<1	Publication

50	moam.info	<1	Internet Data
51	The Evolution of Cyborg Consciousness by Charle-1997	<1	Publication
52	www.ijareeie.com	<1	Publication
53	Article Published by International Research Journal of Engineering and Technology (IRJET) - www.irjet.net	<1	Publication
54	Associations of the Faithful During the Conciliar Phase of Vatican II by Oliver-2010	<1	Publication
55	mdpi.com	<1	Internet Data
56	acc.com	<1	Internet Data
57	archive.mpr.org	<1	Internet Data
58	Article Published in www.conferenceworld.in	<1	Publication
59	artsdocbox.com	<1	Internet Data
60	bircu-journal.com	<1	Publication
61	link.springer.com	<1	Internet Data
62	mdpi.com	<1	Internet Data
63	www.freepatentsonline.com	<1	Internet Data
64	IEEE 2019 32nd SIBGRAPI Conference on Graphics, Patterns and Images (SIBGRAPI) by Escobedo-2019	<1	Publication
65	academicjournals.org	<1	Publication
66	adoc.pub	<1	Internet Data
67	axiomgroupe.com	<1	Internet Data

68	Culturally Responsive School Discipline Implementing Learning Lab at a High Sch by Bal-2018	<1	Publication
69	eprints.lmu.edu.ng	<1	Internet Data
70	mdpi.com	<1	Internet Data
71	mdpi.com	<1	Internet Data
72	openlibrarypublications.telkomuniversity.ac.id	<1	Publication
73	www.arxiv.org	<1	Publication
74	www.mdpi.com	<1	Publication
75	IEEE 2014 International Symposium on Computer, Consumer and Control by	<1	Publication

This pge is extracted due to viral text or high resolution image or graph.

A Project Report On LET US TALK THROUGH GESTURE VOCALIZER Submitted in partial fulfillment of the requirement for the 8th semester Bachelor of Engineering in Computer Science and Engineering DAYANANDA SAGAR COLLEGE OF ENGINEERING (An Autonomous Institute affiliated to VTU, Belagavi, Approved by AICTE & ISO 9001:2008 Certified) Accredited by National Assessment & Accreditation Council (NAAC) with 'A' grade Shavige Malleshwara Hills, Kumaraswamy Layout, Bengaluru-560078 Submitted By Thejaswini S Acharya 1DS19CS181 Vaibhavi Vishwananth Badiger 1DS19CS184 Yashaswini M 1DS19CS195 Sulaksha Sayeesh Padti 1DS20CS420 Under the guidance of Prof Prasad A M Asst Professor, CSE , DSCE Co-guide Sumit Sagar Co-guide - Industry 2022 - 2023 Department of Computer Science and Engineering DAYANANDA SAGAR COLLEGE OF ENGINEERING Bengaluru - 560078

This pge is extracted due to viral text or high resolution image or graph.

VISVESVARAYA TECHNOLOGICAL UNIVERSITY Dayananda Sagar College of Engineering (An Autonomous Institute affiliated to VTU, Belagavi, Approved by AICTE & ISO 9001:2008 Certified) Accredited by National Assessment & Accreditation Council (NAAC) with 'A' grade Shavige Malleshwara Hills, Kumaraswamy Layout, Bengaluru-560078 Department of Computer Science & Engineering CERTIFICATE This is to certify that the project entitled Let Us Talk Through Gesture Vocalizer is a bonafide work carried out by Thejaswini S Acharya [1DS19CS181], Vaibhavi Vishwanath Badiger [1DS19CS184], Yashaswini M [1DS19CS195] and Sulaksha Sayeesh Padti [1DS20CS420] in partial fulfillment of 8th semester, Bachelor of Engineering in Computer Science and Engineering under Visvesvaraya Technological University, Belgaum during the year 2022-23. Prof Prasad A M Dr. Ramesh Babu D R Dr. B. G. Prasad (Guide) Vice Principal and HOD Principal Asst Prof. CSE, DSCE CSE, DSCE DSCE Signature:..... Signature:..... Signature:..... Name of the Examiners: Signature with date: 1..... ..... 2..... .....

ISSN No. : 2321-9653

iJRASET

International Journal for Research in Applied Science & Engineering Technology

IJRASET is indexed with Crossref for DOI-DOI : 10.22214

Website : www.ijraset.com, E-mail : ijraset@gmail.com

ISRA Journal Impact Factor: 7.429

45.98 INDEX COPERNICUS

THOMSON REUTERS Researcher ID: N-9681-2016

10.22214/IJRASET doi cross ref

TOGETHER WE REACH THE GOAL SJIF 7.429

Certificate

It is here by certified that the paper ID : IJRASET48537, entitled

Survey on Gesture Recognition for Sign Language

by

Thejaswini S Acharya

after review is found suitable and has been published in

Volume 11, Issue I, January 2023

in

International Journal for Research in Applied Science & Engineering Technology

(International Peer Reviewed and Refereed Journal)

Good luck for your future endeavors

Editor in Chief, iJRASET

ISSN No. : 2321-9653

iJRASET

International Journal for Research in Applied Science & Engineering Technology

IJRASET is indexed with Crossref for DOI-DOI : 10.22214

Website : www.ijraset.com, E-mail : ijraset@gmail.com

ISRA Journal Impact Factor: 7.429

45.98 INDEX COPERNICUS

THOMSON REUTERS Researcher ID: N-9681-2016

doi 10.22214/IJRASET cross ref

TOGETHER WE REACH THE GOAL SJIF 7.429

Certificate

It is here by certified that the paper ID : IJRASET48537, entitled

Survey on Gesture Recognition for Sign Language

by

Vaibhavi V Badiger

after review is found suitable and has been published in

Volume 11, Issue I, January 2023

in

International Journal for Research in Applied Science & Engineering Technology

(International Peer Reviewed and Refereed Journal)

Good luck for your future endeavors

Editor in Chief, iJRASET

ISSN No. : 2321-9653

iJRASET

International Journal for Research in Applied Science & Engineering Technology

IJRASET is indexed with Crossref for DOI-DOI : 10.22214

Website : www.ijraset.com, E-mail : ijraset@gmail.com

ISRA Journal Impact Factor: 7.429

45.98 INDEX COPERNICUS

THOMSON REUTERS Researcher ID: N-9681-2016

10.22214/IJRASET doi crossref

TOGETHER WE REACH THE GOAL SJIF 7.429

Certificate

It is here by certified that the paper ID : IJRASET48537, entitled

Survey on Gesture Recognition for Sign Language

by

Prof. Prasad A. M

after review is found suitable and has been published in

Volume 11, Issue I, January 2023

in

International Journal for Research in Applied Science & Engineering Technology

(International Peer Reviewed and Refereed Journal)

Good luck for your future endeavors

Editor in Chief, iJRASET

ISSN No. : 2321-9653

iJRASET

International Journal for Research in Applied Science & Engineering Technology

IJRASET is indexed with Crossref for DOI-DOI : 10.22214

Website : www.ijraset.com, E-mail : ijraset@gmail.com

ISRA Journal Impact Factor: 7.429

45.98 INDEX COPERNICUS

THOMSON REUTERS Researcher ID: N-9681-2016

10.22214/IJRASET doi crossref

TOGETHER WE REACH THE GOAL SJIF 7.429

Certificate

It is here by certified that the paper ID : IJRASET48537, entitled

Survey on Gesture Recognition for Sign Language

by

Sulaksha Sayeesh Padti

after review is found suitable and has been published in

Volume 11, Issue I, January 2023

in

International Journal for Research in Applied Science & Engineering Technology

(International Peer Reviewed and Refereed Journal)

Good luck for your future endeavors

Editor in Chief, iJRASET

ISSN No. : 2321-9653

iJRASET

International Journal for Research in Applied Science & Engineering Technology

IJRASET is indexed with Crossref for DOI-DOI : 10.22214

Website : www.ijraset.com, E-mail : ijraset@gmail.com

ISRA Journal Impact Factor: 7.429

45.98 INDEX COPERNICUS

THOMSON REUTERS Researcher ID: N-9681-2016

doi 10.22214/IJRASET cross ref

TOGETHER WE REACH THE GOAL SJIF 7.429

Certificate

It is here by certified that the paper ID : IJRASET48537, entitled

Survey on Gesture Recognition for Sign Language

by

Yashaswini M

after review is found suitable and has been published in

Volume 11, Issue I, January 2023

in

International Journal for Research in Applied Science & Engineering Technology

(International Peer Reviewed and Refereed Journal)

Good luck for your future endeavors

Editor in Chief, iJRASET

iJRASET
International Journal For Research in Applied Science and Engineering Technology

INTERNATIONAL JOURNAL FOR RESEARCH

IN APPLIED SCIENCE & ENGINEERING TECHNOLOGY

Volume: 11 **Issue:** I **Month of publication:** January 2023

DOI: https://doi.org/10.22214/ijraset.2023.48537

www.ijraset.com

Call: 08813907089 | E-mail ID: ijraset@gmail.com

International Journal for Research in Applied Science & Engineering Technology (IJRASET)
ISSN: 2321-9653; IC Value: 45.98; SJ Impact Factor: 7.538
Volume 11 Issue I Jan 2023- Available at www.ijraset.com

Survey on Gesture Recognition for Sign Language

Vaibhavi V Badiger[1], Thejaswini S Acharya[2], Yashaswini M[3], Sulaksha Sayeesh Padti[4], Prof. Prasad A. M[5]
[1, 2, 3, 4] *Student, Department of Computer Science, Dayananda Sagar College of Engineering, Bangalore, India*
[5]*Assistant Professor, Department of Computer Science, Dayananda Sagar College of Engineering, Bangalore, India*

Abstract: From the total world population, more than 5% of the population has problems with speaking and hearing, which creates a barrier in communication as they communicate only using sign language. This paper presents a survey on all components which are required to build a device that helps to reduce this barrier and has studied many inventions in this field, which include all the possible methods through which the device can be built. They include Vision-based methods, device-based methods, and many more. And survey on different hardware like flex sensor, accelerometer, IMU sensor, Arduino, and EMG sensors. An even survey is done on different algorithms used for processing data captured during gesture recognition.
Keywords: Hand Gesture Recognition, IMU sensor, Electromyography, Flex sensor, Arduino, CNN, DBN, ANN, FDN.

I. INTRODUCTION

Communication is a means of exchanging information or emotions between two people or a group of people. To make it successful all participants should know the common language. Communication can be verbal or nonverbal but not everyone can go the verbal way. There are specialized abled people who have problems with speaking and hearing i.e., deaf and mute. As they cannot use verbal ways, then the only way of communication is sign language for them. but not everyone cannot understand sign language which creates a barrier between 2 communities. It is the same problem that two people face when they do not know a common language. In that case, we need a translator. In between it can be a human or a device. Having a person everywhere is not convenient. So, there is a need to develop a device that will help to convert these gestures into text or voice. Our device works as a translator for these two communities. There are many devices that implement unique methods to achieve it. First, let us look into Vision based devices that basically take input from the camera and compare with an already existing dataset if the device finds the match it will be displayed in the form of text or voice. We have hardware-based methods like a smart glove which will capture the gestures through sensors like flex and accelerometer, gyroscope, IMU, and Electromyography, all inputs from sensors are collected and processed in the microprocessor. We can also use Leap Motion Controller and Kinect Motion detection sensor for gesture recognition, which gives more accuracy, hence they are comparatively costly. Then the output can be given in many forms, by using separate speakers or by using an android app that can give voice or text, the output can be given by pre-recording it or by using the TTS algorithm, prerecording creates a delay in giving the output so TTS algorithm gives better output and we can also use IR sensor band to detect the eye movement to give the output according to it but long usage of this band damages the eye nerves. We can classify the gestures into two categories, static and dynamic. The dynamic gesture involves continuous hand moments like hand waves, a moment in circular movements, and sign language sometimes involves the whole body to convey a message. Static does not involve any movement like alphabet input. For vision-based methods, we have done surveys on different algorithms that can be used to process data, like CNN, ANN, DBN, SVM, K-nearest, and many more. CNN is a deep learning algorithm that is used for image recognition and processes which include pixel data. The input taken from the camera in the form of video is segmented further and using CNN we can tag the image with its ID. In ANN we can develop a model which categorizes hand gestures by using the skin color detection method. ML approaches have 4 types namely. Among them, ANN gives better output. As said earlier gestures can be of two types subtle and large motions, SVM helps to divide the input into 2 categories. Further reduction and processing can be made using DBN.

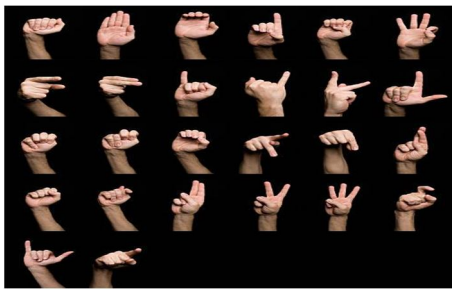

Fig.1 Sign Language Gestures

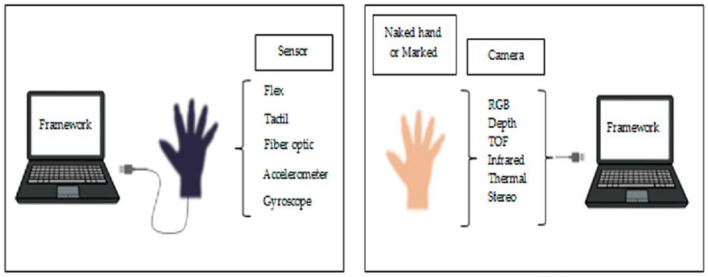

(a) (b)

Fig.2 (a) hardware-based (b) vision-based Hand Gesture Recognition Method

Techniques	Components	Algorithm	Advantages	Limitation
Vision based	Camera sensor, IR sensors	Convolutional Neural Network (CNN), Deep Belief Network (DBN), Support Vector Machine (SVM), K-Nearest Neighbour, Leap Motion	No need to wear any device at all the time,	Portability, Change in light intensity can give a wrong output.
Hardware based	Flex sensors, Gyroscope, Accelerometer,	Artificial Neural Network (ANN), Hidden Markov Model (HMM), Random Projection (RP), Naive Bayes	High accuracy, Real-time Portable, cost-effective,	Data pre-processing is required, Ambiguity while comparing input data and original data.

Table(1) Techniques used for Hand Gesture Recognition System

II. RELATED WORK

In [1] they have designed hand gesture recognition based on the data collected from a 3-axis accelerometer and multi-channel EMG signals from the Electromyography (EMG) sensors. Here the system automatically detects the start and end point of a meaningful gesture by using the intensity of the EMG signals collected from the EMG sensor. Here they have used a dataset containing 72 Chinese Sign Language words and 40 CSL sentences. For the classification of these gestures, they used machine learning techniques like the hidden Markov model and decision tree classification algorithm. This system achieves 98.7% accuracy for word segment detection for both subjects. It also achieves an accuracy of 72.5% for sentences. They have used this system for building a real-time interactive system as a virtual Rubik's cube game using 18 hand gestures as control commands.

This system[2] uses a single 3-axis accelerometer to recognize sign language. It contains 2 stages: The training stage and the testing stage. For the training stage, it uses a Dynamic-time-warping algorithm. For the testing stage, this system estimates all the unknown and candidate traces onto a lower (linear) dimensional subspace. This system also addresses the hand gesture recognition problem using Random projection. It formulates the whole problem into a minimization problem. It uses the 18 hand gestures defined in the dataset. It also uses 7 subjects to create a database of over 3700 traces, on which the system is tested and the results are evaluated. Using this, the system achieves 98.71% accuracy for mixed-user recognition for the dictionary of 18 gestures. It also achieves accuracies of 96.84 and 94.6 for the dictionary containing 8 gestures and 18 gestures, respectively.

In[3] They developed an accelerometer-based pen-type sensing device. This system is user-independent which means that users can hold this pen-type device and perform hand gestures with their choice of handheld style. These gestures are classified as basic and complex gestures. Complex gestures can be represented as a basic gesture sequence. They have defined 24 hand gestures, which contain 8 basic gestures and 16 complex gestures. This uses an effective segmentation algorithm to classify the accuracy of the performed hand gesture. With the help of the segmentation algorithm, each complex gesture is segmented or divided into several basic gestures. 25 features are extracted using the kinematic characteristics of the basic gestures. These features can be used to train the FNN (Feed Forward Neural Network) model. Input gestures for basic gesture recognition are classified directly by the FNN (Feed Forward Neural Network) classification model. Complex gestures are classified by using a similarity matching procedure, which identifies the most similar sequences of the gestures. For both basic gestures and complex gestures, this system achieves 99.88% accuracy for user-independent and user-dependent gesture recognition. They collected data from 5 subjects. The effectiveness of the FNN (Feed Forward Neural Network) and similarity matching algorithms are validated using 1600 trajectories.

[4] presents the different techniques used for developing a hand gesture recognition system for sign language recognition. Here they have defined two types of techniques, vision-based hand gesture recognition technique, and data glove-based technique. These two techniques use MATLAB for processing the input data, which can be image or data from the sensors. Vision-based gestures can be performed using two types, one is a static hand gesture technique and the other one is a real-time algorithm. This real-time algorithm technique takes video as input. The data glove-based technique uses sensors to collect the data. It consists of 5 flex sensors, whenever the user bends the fingers, data is collected based on the bending degree or the pressure on the sensor. Here based on changes in the resistance value of each flex sensor a unique hand gesture is recognized. This technique is performed on 10 subjects, which is then compared with the dataset to find the most accurate technique for recognizing hand gestures.

In [5], they addressed the problem of real-time EMG-based hand gesture recognition, and it also gives the embedded solution for this problem. It mainly concentrated on the system design, and also on integrating the software and hardware components to build a wearable device, which is capable of collecting the data from EMG signals in real-time, and it also focuses on processing the EMG signals collected from the sensors. For onboard processing of data, this system combines the analog front end with the data from the microcontroller. From the 4 different users, 7 types of hand gestures are collected to create a dataset. This system uses an SVM classification algorithm, to determine the accuracy of the hand gesture recognition. This classification technique using SVM achieves 90% of accuracy. It consumes an overall 29.7mW of power with a 400 mAh battery, this system can operate continuously for up to 44 hours.

[6] presents the implementation of a wearable hand gesture recognition system for American Sign Language Recognition, to build this system, data from inertial and surface-myography sensors are collected. To select the subset of features from the well-established features, this system uses a feature selection scheme, in this system information-gain-based feature selection scheme is used. This system uses four classification algorithms to evaluate the accuracy of the hand gestures performed, with a selected feature subset and, by the use of the SVM classification algorithm this system obtains overall average accuracies of 96.16% and 85.24% for intra-subject evaluation and intra-subject cross-session evaluation respectively.

[7] constructs a dynamic hand gesture recognition system using PNN (probabilistic Neural Network). This system is mainly focused on developing hand gesture recognition devices for the practical usage of dynamic gestures in day-to-day life. In this system, 10 gesture patterns are generated by using data-glove, and each gesture in this system is trained for generating 360 input vectors using the PNN classification model. The output of this system can be given via speakers. This system is tested on 23 disabled people, and based on the data, the performance of the proposed system is evaluated. This system also results in problems while detecting the gestures, for gestures 7 and 10 this system doesn't detect the accuracy correctly. 92.7% of accuracy is obtained from this device.

In[8] the system is developed using Arduino UNO and a flex sensor for recognizing hand gestures. In this system data collected from flex sensors are analyzed using different machine learning techniques, these data were categorized on the basis of 4 labels, which contain class labels 0, 1, 2, and 3. This system collects the data in the form of integer values, for each interval of 0.25 seconds, a new value from the sensor will be obtained based on changes made in the bending degree of each flex sensor, these two data are labeled as A and B, these labels represent the value which is obtained by the flex sensor. This system extracts the features from the pre-existing data, here it collects a total of 6 features, which can be then used to analyze the data using a machine learning model. The technique used in this system achieves 88.32% accuracy, 81.77%, and 84.37% of precision accuracy, and it also achieves an 82.78% of F1-score.

The authors of [9] developed a useful double-handed transportable glove system for people who cannot speak and/or hear. This system was developed specifically for Taiwanese sign language with the help of flex sensors and inertial sensors to capture the record of finger bending and hand orientations respectively.

The speech output was taken through a smartphone. For the identification of signs, they had taken the help of three registers. One was to match the previous gesture with the present, the second one for palm orientation, and the last one is to track the motion of the hand. They considered signs for five different emotions with only 5 subjects (for training). More than 94% of efficacy was gained by this proposed system considering the parameter of sensitivity.

In [10] paper, the author introduced a special kind of glove system for deaf-mute people to convert their sign language to human understandable words or speech. They developed gloves for both hands containing flex sensors and an accelerometer connected with a gyroscope, thus they had done data collection through them. Adding to it, contact sensors were also used to eliminate the mismatch of input signals. Signal conditioning was done for flex sensors to make sure that they will give the proper output. Using a microcontroller, signals from each hand were processed and they were combined using a Bluetooth transmitter. Speech output was taken through speakers. Author of [10] gained an efficacy of about 93% for alphanumerics.

The author of [11] paper introduced a special kind of gesture-recognizing sensor called a Leap Motion controller(LMC). Using LMC, a system was developed for deaf or mute people around the world and they can communicate easily with normal people through their sign language. Firstly, LMC captures the gestures performed by them. From those, palm & finger-related data were extracted through LMC. They were normalized as feature sets, then they were passed into a multilayer perceptron neural network(MLP) to perform the process of classification. After that, processed signals were handed to artificial neural networks from which output units that specify alphabets or numbers of the performed gestures were produced. An algorithm was also used to reduce the possible error by propagating backwardly. The proposed system was able to attain above 95% of accuracy in identifying 26 letters of American Sign Language(ASL). The author of [11] paper also suggested enhancing their system for sentences or words in the future.

The author of [12] paper demonstrated a system by using 5 flex sensors, 5 force sensors, an accelerometer, and a contact sensor for people who cannot speak or hear. Through the sensors mentioned, required data of palm and finger orientations are collected. Gathered analog data was processed and digitized using Microcontroller. The output is presented through a wired LCD display as well as on smartphones through Bluetooth. The proposed system has attained an efficacy of 96% by being able to identify 20 out of 26 letters of ASL. In the [13] paper, authors developed a system for still gestures of several sign languages. Here gloves for two hands were developed with the help of flex sensors (inner and outer) and contact sensors which collect the data of movement of fingers and hands. Then the input signals were passed into two supporting hardware. Those two microcontrollers operate the values, distinguish the gestures and present them on the LCD. The proposed system works in the Default Operating Model for which it gained an accuracy of more than 83% and an Intelligent Operating Model for which it gained an efficiency of 60%. The performed gestures were fractionated into 3 blocks and they were compared with the table containing all the gestures. Only the proper match of blocks with the performed gesture is perceived using DOM & IOM models.

In the paper [14], the authors discussed the sign language conversion system using a special device called the Kinect motion sensor device. The proposed system contains information about how the training and translation method is done using the device mentioned above. In the training phase, the subject has to perform each gesture 5 times in front of the device. Then the mean of each gesture's 5 inputs is calculated and stored in the database. In the translation process, once the subject performs a gesture it checks with the database, and it gives the word output stored in that database. Otherwise, it shows the message saying that the gesture isn't available and suggests training the model for that unidentified sign. Even this device has some faults like it can give a wrong output when it fails to capture real-time data. Here is the current work of this paper speech conversion of the words is not done. In [15] paper, authors developed a suit consisting of several inertial measurement unit (IMU) sensors fitted on the upper body of the participant. The system was developed to know about the participant's capacity to persuade the decisions for basketball with the help of official referee signals(ORS). Basically, it's a training system where two types of tests were given to participants before and after training them with ORS, to compare their results respectively. Firstly participants were made to make decisions by watching the 10 pre-recorded videos and the correct decisions were stored. Then the second test will be conducted through three steps. In the first 2 steps, the participant was made to look at the ORS names and perform those gestures along with them. In the last step, he or she has to judge 10 more scenarios. The correct decisions of both tests are tallied to know about participants' judgment skills. There are a few drawbacks of this suit as it requires time to wear properly and it can also get affected by the presence of other electronics. In [16] paper they developed a glove for a single hand to convert the sign language for deaf-mute people with the help of 5 accelerometers. Each accelerometer has three input components, thus this hand glove will have 15 inputs which were processed by a microcontroller. Then this analog data is fed to a smartphone through Bluetooth. An Android application is also included in this system to have speech or letter output of word or phrase as letter or voice however the user wishes to have.This system could also be enhanced for other Sign languages.

This paper [17] says why we choose Arduino, there are many other boards in the market there are a few reasons which We need to consider it already has many active users there is a community working on it, it supports many operating systems, and easily programmable, quite inexpensive as well, In Arduino itself we have many come with built-in Bluetooth, Ethernet, and many other options. This paper also gives an insight into all the parts of Arduino, hardware parts and software how we can code, the tiny details available in Arduino IDE all the things are explained in detail, and about few real-time applications which were built using Arduino like an open-source satellite for research purpose and wearable device many other highly developed projects are explained in the paper.

This paper [18] is mainly focused on the application of flex sensors in different fields and their working in detail, here can see flex sensors can be found in 3 types, optical flex sensors here a light source, and a photodetector is kept on another side to major light passing when the flex is bent similarly other flex sensors are explained. they are capacitated and conductive based. Then author goes on explaining how flex sensor is not specified to single field, it does have its application in many fields like, the first application was a Goniometer a glow which can help to detect finger moments and here on a plastic carbon resistance material was placed to produce resistance and a circuit was designed to collect data ADC convertor, in early days this work was done by mechanical Goniometer which used to a lot of times for processing Another glove was developed to interact with 3D virtual objects by Giovanni Saggio et al using flex sensor ,An obstacle detecting device is quite important in a vehicle but infrared ultrasonic sensor are expensive flex provides affordable object detection which can be placed on 4 sides of vehicle ,an application was designed to detect landslides using flex sensor , a device was developed to detect intrusion by considering the status of door , author explains how flex sensors can be used as musical instruments then author specifically focuses on how flex sensor can be used to detect dent on vehicle ,for this purpose earlier signal vibrations were used but metal do have a nature vibration so results can be wrong many times so it is important to detect shape change of surface which is done using flex sensors.

Here [19] has developed a simple device to translate all the alphabets of sign language to audio and they have focused on creating their own flex sensors to take the output, here they have constructed 2 flex sensors one with copper and another with aluminum, they have placed a resistive material inside 2 strips of copper foil and that sandwich is laminated here they have done an experiment to detect the signal with copper and aluminum and came with a conclusion that copper gives promising result In this project author has used 9 flex sensors and 3 accelerometers which are connected to the simple microcontroller where the processing of data takes place this result is sent to a mobile app for audio by a Bluetooth device, here every alphabet has to be spelled out with 10-sec gap which will not be a practical way of communication and the delay can be reduced with better algorithm implementation and we need a sensor to detect hand moments of other parts not just fingers and analyze the result.

[20] is quite simple yet impressive work, it is a device that converts 9 signs into text. Here they have used 3 flex sensors and one accelerometer which are used to detect finger moments and tilt moments, the continued input from the flex and accelerometer is sent to a microprocessor where they calculate the resistance change by flex and compare it with already present data then it was sent to LCD where they displayed the output from the microprocessor, but the drawback which we can see here is the device is capable of detecting only 9 gestures and it's not portable as LCD is mounted a breadboard it can not be carried everywhere, and in the country, like India where we have many languages not everyone is familiar with English and reading it so the device fails to help an individual in communicating And output which they have taken considered only 3 fingers but if we take real-time sign language communication it involves all five fingers some time even arm so this project lacks this that particular area, these all drawbacks are covered in our project.

[21] has proposed to help mute people to communicate through gestures, first it explains how devices can be used in many sectors like education, medical, public areas, industries, and many other places. The first author goes on to explain how the present dataset takes a long time to process and is limited to only a few gesture identification and author also explains how grammar in SL is important and should be considered while developing an SLR (sign language recognition) system. Next section covers on all the methods which are available SLR recognition it can be sensor based or vision based, there few drawbacks in the present systems which can identify only few moment to solve this problem we need to add few more sensors in arm and shoulder area and in vision based it is necessary to add extra filter to recognise words like U and V, further author has explained mainly 2 categories hardware based and software based, software based method usually include usage of algorithms like CNN which takes input from computer and processes and gives out output on screen, Hardware based methods have many subdivisions first one is smart glove method which uses sensors like flex and accelerometer and take reading from hand movements based on change in resistance second subdivision is IR sensing eye band which has few IR sensors attached to band and based on eye movements digital bits are generated, long usage of this band effects eye and last subdivision is Hybrid method which uses both hardware and software methods to recognize the gesture . Then the author explained how text can be converted into voice.

There are quite a few methods for it using preloaded voice and using the TTS algorithm both have their own pros and cons; Deep Belief networks are proven to be best among all other methods for conversion. This project is implemented using raspberry pie, which is expensive hardware, and here it is not needed. We can work with less expensive devices like Arduino which will give us the same results.

[22] has developed gloves that can recognize Indian sign language (ISL) gestures, ISL actually includes 3000 words, here they have used 8 flex sensors input from the sensors is given to Arduino where they have created 2 algorithms to calculate the aggregated value of all 8 flex sensors and second algorithm to compare the aggregated value to already given threshold, this value is, microcontroller recognizes the alphabet, makes the decision and sends the signal to give the audio output, here they have used pre-recorded method, which creates a bit delay and puts a constraint to very few gesture recognition. Then the author goes on to explain different algorithms present for gesture Sign Language Interpretation, total of 3 algorithms have been explained here SVM, ANN, and HMM.

[23] explains that sign language has 2 types of gestures static and dynamic, dynamic gesture involves continuous hand moments like hand waves, and moments in circular movements, and sign language sometimes involves the whole body to convey a message, to identify these Here they have applied two different methods for both gestures, for the static method they have shown 4 steps first normalization of data then comes skin color detection followed by skin color model at last hand gesture recognition. Normalization is changing pixel intensity value near users' images for better results, skin color model helps to put a label on objects in an image by dividing them into frames For the dynamic method they have considered 3 steps first skin color detection then training and testing phases, In the training phase, simple dynamic hand gestures are taken into consideration like high five, fisting and Gesture ID is given for hand gesture recognition, In the testing phase, each image is given s subspace each subspace represents a shape gesture recognition and movement gradient will give gesture movement pair which will be output, they have used MATLAB for the implementation, the drawback is you always need a computer to get the output a person cannot carry it around just to communicate with a person so it won't use full in day to day life and complex background can mess up with the output.

[24] mainly focuses on developing a cost-effective device for Speech Impaired People. So for gesture recognition, they have considered both image processing and sensor-based devices. Since Gesture detection was better in sensor-based systems, they implemented their device using flex sensors, an accelerometer, and an onboard gyroscope. Here the principle of flex sensor is understood. Flex has features like lightness, cheapness, and robustness but they also have problems, due to changes in resistance over time which can cause changes in value, so we need to change all the flex sensors implemented. Hence to make it cost-effective they have suggested a fabrication method for the flex sensors.

[25] This paper mainly focuses on developing light weighted, real-time portable assistance for speech-impaired people. This is done by taking a specific hand sign and assigning it to whole meaningful sentences which are used regularly. They have divided their system into two different parts, transmitter and receiver, which helps them to reduce the load on the processing of the data. The transmitter contains a flex sensor to gather the inputs.It will then be forwarded to the microcontroller through Bluetooth. In the transmitter, the input data is checked for its correctness, and the receiver consists of an Arduino board embedded with an SD card where the voices of the specific gesture are stored. It then matches the input with the corresponding data set and produces output in the text that is LCD display and voice through Speaker. This device reduces bulkiness and has high accuracy. It has a good sound quality, and just one sign provides a complete sentence. Users can customize the system. Accuracy is calculated by iterating the same message 50 times and has slightly higher accuracy than other works. Users can even increase the input gestures with unique sentences for each hand sign.

In [26] they used three sensors for better results and accuracy. They have used sensors for reading American sign language (ASL), but they have mainly focused on the sensor position and protecting them for long time use. Data is collected from all three sensors due to their difference in voltages, caused by hand signs, and processed in the microcontroller. Then data is converted into digital values from the analog input. This value is used for the decision-making process and the output is in text format as well as audio with the use of a text-to-sound converter IC. All sensors are positioned on gloves in such a way that it increases their working and they get high accuracy for each sign. Gloves flexibility was reduced to decrease its fluctuation chances. Dynamic gesture recognition was successful with an accuracy of 100%. An average success rate of more than 90% was achieved. They have achieved the protection of sensitive sensors by wrapping them with plastic which prevents them from contamination. The drawbacks of this proposed system are that it has a difficulty in sorting fixed letters from each other and the active letters within a given time frame. They also want their system to further identify an ASL word or sentence and make the system go wireless.

In paper [27] they have implemented a hand sign converter for Indian sign language(ISL) which is a little unique because it requires the use of both hands. In the sense, they have captured the movements of all ten fingers including their wrist movements. They have used flex sensors and accelerometers to capture the hand gestures like rotation, direction change, and angle tilts.

These are fitted over data gloves to get different voltages for different gestures. Voltage is then processed by a microcontroller and a voice module is used in which different voices are stored for different voltage gestures. The data from the microcontroller is passed to the voice module to match it with stored data to produce voice by the speaker and an LCD display for text output. This project helps in developing devices for Indian sign language which is really helpful since India has a very vast language diversity. It does not only capture wrist and finger movement but also elbow movement which increases accuracy. Even though this system was made for daily use by speech-impaired people, this is quite bulky which will make it difficult to be portable. It has only a few distinct outputs for each bent, like 8 voice outputs for eight gestures of the hand. They only captured one hand movement and they want to extend it to both hands with increasing the number of outputs produced.

In [28] using simple flex, tilt, and contact sensors they have developed a basic gesture recognition algorithm and converted American Sign Language(ASL) to text. They have developed an application that converts texts to gestures, and a translator which helps in two-way communication. The application will have an option that will allow the user to choose actions like either sign-to-text or text-to-sign. This project is made cost-effective with the use of only a flex sensor, an Arduino UNO board, a 3-Axis accelerometer to capture the wrist movement, and a glove for implementing these sensors. Initially, they faced many ambiguity problems but later they added contact sensors which helped in distinguishing the letter. System stability was low and Letters are less adaptive for the sensor's threshold. They have a future idea of implementing software at the user end which will be easier to use as a translator.

In [29] they have developed an assistive tool that can be used by specially-abled people through the integration of both software and hardware. This paper mainly focuses on software that is helpful in running the interpreter at the user end. Hardware is made up of nine-axis motion tracking sensors which help to read the orientation of the hand and gather the input sign. The motion is captured by gloves and this signal is processed using a processing unit and mobile application which acts as an interpreter. The device is trained in a learning environment with the support of a backend server. Then the processing of the gesture descriptor stream from gloves is done by the interpreter to produce the output, in the form of audio and understandable text. Interpreters consist of algorithms that help in processing and correcting the input. Since the output is in loud audio format this device can be used to establish communication in public places. This paper targets only deaf people, they want to advance it to speech-impaired and physically disabled people like stroke patients during rehabilitation.In [30], Data is collected through data gloves in which 5 flex sensors are attached to it and processed in a microcontroller where a database of multiple gestures is stored. There are two parts: transmitter and receiver. At the receiver end, they have the option to change the mode to either Home-automation or speech generation. One of the advantages is that only one hand sign can be used either for a Gesture to Voice Synthesis Mode or to device control mode. It is difficult to be portable since it is implemented on a breadboard.

III. CONCLUSION

Here we have done a survey on the techniques, algorithms and components used for SL gesture detection. The survey reviewed the benefits of hardware-based gesture recognition systems over vision-based systems. Many proposed systems which used flex sensors and accelerometers are able to attain higher accuracy. Vision-based systems have used ML algorithms like CNN, ANN, K-nearest, and many more algorithms that could recognize many static gestures with more efficiency but for dynamic gestures, their efficiency is comparatively reduced. Flex sensor-based hand gloves are portable and also can give text and/or speech outputs in their preferred languages. Even hardware-based systems are required to have a predefined dataset but it will give more accurate results for both methods still and active gestures.

REFERENCES

[1] X. Zhang, X. Chen, Y. Li, V. Lantz, K. Wang and J. Yang, "A Framework for Hand Gesture Recognition Based on Accelerometer and EMG Sensors," in IEEE Transactions on Systems, Man, and Cybernetics - Part A: Systems and Humans, vol. 41, no. 6, pp. 1064-1076, Nov. 2011.

[2] A. Akl, C. Feng and S. Valaee, "A Novel Accelerometer-Based Gesture Recognition System," in IEEE Transactions on Signal Processing, vol. 59, no. 12, pp. 6197-6205, Dec. 2011.

[3] R. Xie and J. Cao, "Accelerometer-Based Hand Gesture Recognition by Neural Network and Similarity Matching," in IEEE Sensors Journal, vol. 16, no. 11, pp. 4537-4545, June1, 2016.

[4] O. R. Chanu, A. Pillai, S. Sinha and P. Das, "Comparative study for vision based and data based hand gesture recognition technique," 2017 International Conference on Intelligent Communication and Computational Techniques (ICCT), 2017, pp. 26-31

[5] S. Benatti et al., "A Versatile Embedded Platform for EMG Acquisition and Gesture Recognition," in IEEE Transactions on Biomedical Circuits and Systems, vol. 9, no. 5, pp. 620-630, Oct. 2015.
[6] J. Wu, L. Sun and R. Jafari, "A Wearable System for Recognizing American Sign Language in Real-Time Using IMU and Surface EMG Sensors," in IEEE Journal of Biomedical and Health Informatics, vol. 20, no. 5, pp. 1281-1290, Sept. 2016
[7] D. Bal, A. M. Arfi and S. Dey, "Dynamic Hand Gesture Pattern Recognition Using Probabilistic Neural Network," 2021 IEEE International IOT, Electronics and Mechatronics Conference (IEMTRONICS), 2021, pp. 1-4.
[8] A. K. Panda, R. Chakravarty and S. Moulik, "Hand Gesture Recognition using Flex Sensor and Machine Learning Algorithms," 2020 IEEE-EMBS Conference on Biomedical Engineering and Sciences (IECBES), 2021, pp. 449-453.
[9] L. -J. Kau, W. -L. Su, P. -J. Yu and S. -J. Wei, "A real-time portable sign language translation system," 2015 IEEE 58th International Midwest Symposium on Circuits and Systems (MWSCAS), 2015, pp. 1-4
[10] H. Shaheen and T. Mehmood, "Talking Gloves: Low-Cost Gesture Recognition System for Sign Language Translation," 2018 IEEE Region Ten Symposium (Tensymp), 2018, pp. 219-224
[11] D. Naglot, "Real Time Sign Language Recognition using the Leap Motion Controller," pp. 1–5, 2017.
[12] M. Elmahgiubi, M. Ennajar, N. Drawil and M. S. Elbuni, "Sign language translator and gesture recognition," 2015 Global Summit on Computer & Information Technology (GSCIT), 2015, pp. 1-6
[13] H. Sekar, R. Rajashekar, G. Srinivasan, P. Suresh and V. Vijayaraghavan, "Low-cost intelligent static gesture recognition system," 2016 Annual IEEE Systems Conference (SysCon), 2016, pp. 1-6
[14] S. S. Hazari, Asaduzzaman, L. Alam and N. A. Goni, "Designing a sign language translation system using kinect motion sensor device," 2017 International Conference on Electrical, Computer and Communication Engineering (ECCE), 2017, pp. 344-349
[15] T. -Y. Pan, C. -Y. Chang, W. -L. Tsai and M. -C. Hu, "Multisensor-Based 3D Gesture Recognition for a Decision-Making Training System," in IEEE Sensors Journal, vol. 21, no. 1, pp. 706-716, 1 Jan.1, 2021
[16] C. Nasrany, R. B. Abdou, A. Kassem and M. Hamad, "S2LV — A sign to letter and voice converter," 2015 International Conference on Advances in Biomedical Engineering (ICABME), 2015, pp. 185-188.
[17] Louis, Leo. (2018). "Working Principle of Arduino and Using it as a Tool for Study and Research." International Journal of Control, Automation, Communication and Systems. 1. 10.5121/ijcacs.2016.1203.
[18] Alapati, Sreejan & Yeole, Shivraj Narayan. (2017). "A Review on Applications of Flex Sensors. International Journal of Emerging Technology and Advanced Engineering." 7. 97-100.
[19] Praveen Kumar, Amar Dhwaj, Ajim Hasan, Amit Prabhakar, "Design and development of a cost-effective flex sensors for recognition of international sign language through the motion of hand," International Journal of Advances in Electronics and Computer Science, ISSN: 2393-2835 Volume-5, Issue-2, Feb.-2018
[20] Ankush Subhash Mestry, Adesh Rahane, Suyog Sankhe, Sumit Sonawane, Supriya Dicholkar," Hand gesture vocalizer", International Research Journal of Engineering and Technology (IRJET) ,Volume: 09 Issue: 04 | Apr 2022.
[21] Ganganna, Mamatha. (2021). "Smart Glove for the Disabled: A Survey." CiiT International Journal of Programmable Device Circuits and Systems, Vol 13, No 2, February 2021.
[22] Rewari, Hardik & Dixit, Vishal & Batra, Dhroov & Nagaraja, Hema. (2018). "Automated Sign Language Interpreter." 1-5. 10.1109/IC3.2018.8530658.
[23] N. Subhash Chandra1, T. Venu, P. Srikanth, "A REAL TIME STATIC & DYNAMIC HAND GESTURE RECOGNITION SYSTEM, "International Journal of Engineering Inventions e-ISSN: 2278-7461, p-ISSN: 2319-649
[24] Pavan Telluri, Saradeep Manam, Sathwic Somarouthu, Jayashree M Oli, Chinthala Ramesh "Low cost flex powered gesture detection system and its applications," 2020 International Conference on Inventive Research in Computing Applications (ICIRCA-2020)
[25] Aastha Nagpal , Aqusa Noor , Ketaki Singha , Ashish Bagwari , Rakshita Gouri,Shamimul Qamarma "Helping Hand Device for Speech Impaired People," 2020 Global Conference on Wireless and Optical Technologies (GCWOT).
[26] Vishal Pathak, Sushant Mongia, Gaurav Chitranshe "A Framework for Hand Gesture Recognition based on fusion of Flex, Contact and Accelerometer Sensor", 2015 Third International Conference on Image Infonnation Processing.
[27] Mrs.NeelaHarish , Dr.S.Poonguzhali "Design and development of hand gesture recognition system for speech impaired people," 2015 International Conference on Industrial Instrumentation and Control (ICIC) College of Engineering Pune, India. May 28-30, 2015.
[28] Quiapo, Carlos Emmanuel A. and Ramos, Katrina Nicole M. "Development of a Sign Language Translator Using Simplified Tilt, Flex and Contact Sensor Modules," 2016 IEEE Region 10 Conference (TENCON) — Proceedings of the International Conference.
[29] Péter Mátételki, Máté Pataki, Sándor Turbucz, László Kovács "An assistive interpreter tool using glove-based hand gesture recognition," 2014 IEEE Canada International Humanitarian Technology Conference - (IHTC).
[30] Suyash Ail , Bhargav Chauhan , Harsh Dabhi, Viraj Darji4,Yukti Bandi, "Hand Gesture Based Vocaliser for the Speech Impaired," 2020, Proceedings of International Conference on Wireless Communication , 2020(pp.585-592)

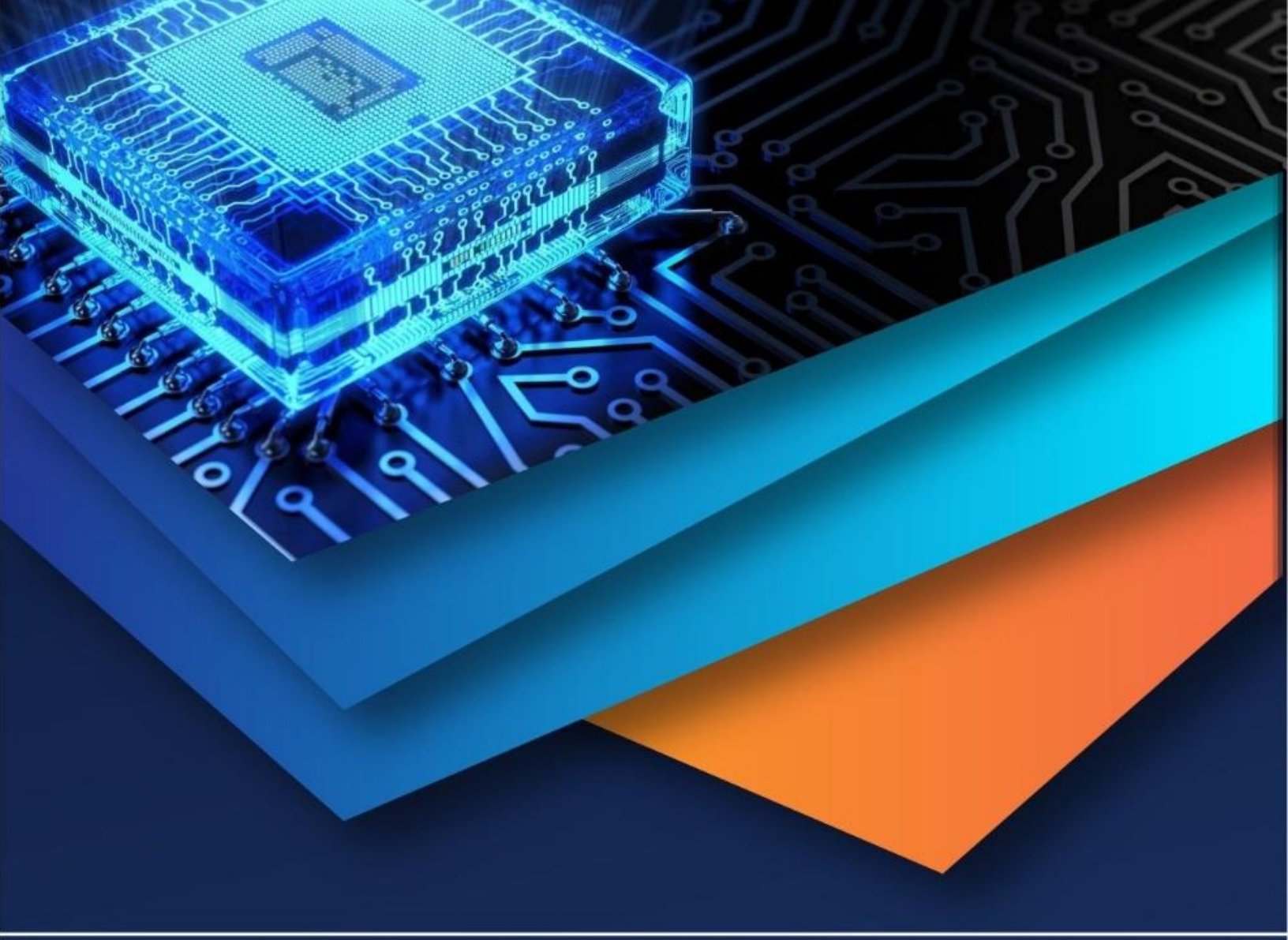

10.22214/IJRASET

45.98

IMPACT FACTOR: 7.129

IMPACT FACTOR: 7.429

INTERNATIONAL JOURNAL FOR RESEARCH

IN APPLIED SCIENCE & ENGINEERING TECHNOLOGY

Call : 08813907089 (24*7 Support on Whatsapp)