Chapter 9 – 5G

Lecture Mobile Communication
Oliver P. Waldhorst

Outline

Wi-Fi, Bluetooth

GSM, UMTS, LTE, 5G

Mobility Management

Medium access

Wireless transmission

Introduction 5G

Motivation 5G

- Support for new mobile applications
  - Extremely high data rates per device (multiple of 10 Gbit/s)
    - e.g. for the transmission of Ultra HD video and 3D rendering
  - High data rates per area and large numbers of connected devices
  - Extremely low latencies (round trip times < 1ms)
    - e.g. for interactive multimedia transmissions
  - Highly reliable support for critical applications such as Vehicle-to-Vehicle (V2V), Vehicle-to-Infrastructure (V2X), Industrial Control, Healthcare, ...

5G - Goals

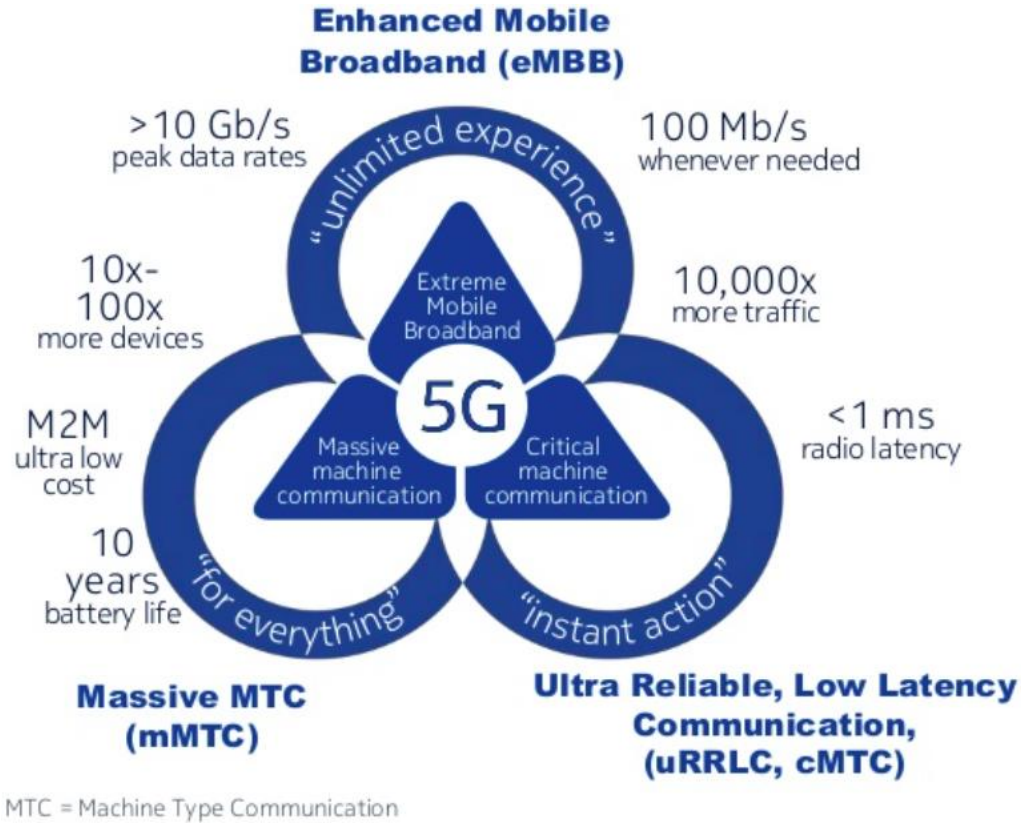

Changes vs LTE		*Targets*
10x data rates	→	20 Gb/s
10x lower latency	→	<1 ms
10x lower IoT power	→	<10 µWh per tx
5x energy efficiency	→	<1 kWh/TB
3x spectral efficiency	→	>10 bps/cell/Hz

What's new in 5G - Overview

- Radio access network (Next Generation Radio Network, NG-RAN) with new radio interface (New Radio, NR)
  - New frequency ranges
  - Improved wireless technology
    - Massive MIMO (>= 16 antenna elements)
    - Multiple carrier frequencies (Carrier Aggregation)
    - Spectrum Sharing
  - Cloud RAN
  - Device-to-Device, Machine-to-Machine and IoT Support
- Core network (5G Next Generation Core Network, 5GC)
  - Service-Based Architecture
  - Multi-access Edge Computing
  - Network Slicing
  - Software Defined Networking
  - Network Function Virtualization

[9.1]

5G Frequency Ranges (1)

- 5G will be used flexibly in a wide variety of frequency bands
  - Low-Band Spectrum (< 3 GHz): Comprehensive connectivity and high mobility for applications with reliability requirements, e.g. Ultra-Reliable Low Latency Communication (uRLLC) and Massive Machine Type Communications (mMTC)
  - Mid-Band Spectrum (>= 3 GHz, < 6 GHz): Broadband connection of end devices, Enhanced Mobile Broadband (eMBB)
    - Preferred band for 5G pilot installations in Europe (3.4 GHz – 3.8 GHz)
  - High-Band Spectrum (>> 6 GHz): Necessary bandwidths for peaks of 20 Gbit/s and nationwide coverage with 100 Mbit/s only available in the millimeter wave (mmWave) range
    - High attenuation / short range -> sophisticated transmission technology
- Common names
  - Frequency bands < 6 GHz: Frequency Range 1 (FR1)
  - Frequency bands >= 6GHz: Frequency Range 2 (FR2)

[9.1]

5G Frequency Ranges (2)

Cell range / Data rate	Spectrum range	Bands	Coverage	Peak Data rates	Bandwidth	Use Cases
	Low band < 3 GHz	• 600 MHz (n71) • 700 MHz (n28) • 900 MHz (n81) • 1800 MHz (n80)	• Deep indoor • >1 km	~100 Mbps	FDD 2x10 MHz	• Deep indoor coverage for e.g. MTC • Supplementary UL eMBB coverage • Coverage layer for MBB
	Mid-band 3 – 6 GHz	• 3.4-3.6 GHz (n78) • 3.6-3.8 GHz (n77) • 4.5-4.9 GHz (n79)	• Same grid as LTE1800 • ~1 km	~1 Gbps	TDD <100 MHz	• 5G eMBB coverage on LTE grid • Major commercial 5G launches are expected in this spectrum range (JPN, KRN, CHN, EUR)
	mmWaves > 24 GHz	• 26 GHz (n257) • 28 GHz (n258) • 39 GHz (n260)	• Hot spots • Line of sight • 100 m	~10 Gbps	TDD <1 GHz	• Extreme data rates for e.g. VR in local areas like stadiums • Used in US due to lack of 3-6 GHz

[9.2]

5G Frequency Auction in Germany (1)

- Auction of frequencies in spring/summer 2019
  - Start: 19.03.2019

- Auctioned frequency blocks
  - 2 GHz band (2 x 60 MHz at 1,920 MHz - 1,980 MHz / 2,110 MHz - 2,170 MHz) in contiguous 5 MHz blocks
  - Most of the 3.6 GHz band (1 x 300 MHz at 3,400 MHz – 3,700 MHz) in contiguous 10 MHz blocks
  - Additionally frequencies in the range of 3,700 MHz – 3,800 MHz for local use

- Result
  - End of auction: 12.06.2019
  - Result: around €6.6 billion
  - Distribution of frequency blocks:
    - Telekom (13 blocks, €2.17 billion), Vodafone (12 blocks, €1.88 billion), Telefónica (9 blocks, €1.42 billion), Drillisch / 1&1 (7 blocks, €1.07 billion)

[9.3]

5G Frequency Auction in Germany (2)

- Requirements:
  - by the end of 2022, at least 98% of households per federal state with at least 100 Mbit/s,
  - by the end of 2022, all federal motorways with at least 100 Mbit/s and a maximum of
  - 10 milliseconds (ms) latency,
  - by the end of 2022, federal highways with connection function levels 0 / 1 with at least 100 Mbit/s and no more latency than 10 ms,
  - by the end of 2024, all other federal highways with at least 100 Mbit/s and no more latency than 10 ms,
  - by the end of 2024, all state and state roads with at least 50 Mbit/s,
  - by the end of 2024, the seaports and the core network of inland waterways with at least 50 Mbit/s,
  - by the end of 2022, the railways with more than 2,000 passengers per day at at least 100 Mbit/s,
  - by the end of 2024, all other rail lines with at least 50 Mbit/s
- Also until the end of 2022
  - 1,000 "5G base stations" and
  - 500 base stations with at least 100 Mbit/s in "white spots"

[9.3]

Network coverage 5G (example: Vodafone)

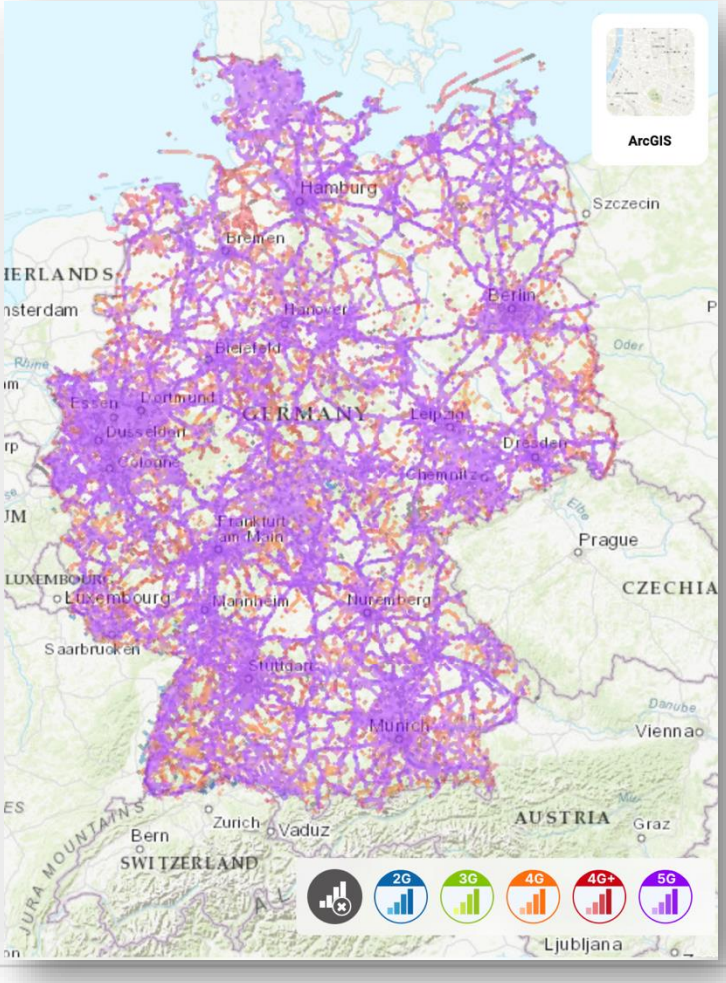

Source: nperf.com

5G Deployment Options

	Standalone (SA)	Non-standalone (NSA)
5G New Radio (NR)	Directly used by 5G for control and data plane	Used as a secondary radio technology under the control of LTE base station
Options core network	5G Next Generation Core (5GC), provides optional mobility anchor for Inter-Radio-Access-Technology (IRAT) handover with LTE	4G EPC or 5GC
Perspective Operator	Simple, high performance	Uses existing 4G installation
Perspective Hardware Manufacturers	Independent product	Close interaction with LTE
End user perspective	Data rate determined by NR Low latencies possible	Data rate is sum of LTE and NR latency higher when routed over LTE

[9.2]

3GPP LTE and 5G: Coexistence (1)

Architecture options	Core network	Primary Radio Technology	Secondary radio technology	3GPP designation	3GPP Release
Option 1	EPC	LTE	-	LTE	Rel. 8
Option 3	EPC	LTE	NO	EN-DC	Rel. 15, 12/2017
Option 2	5GC	NO	-	NO	Rel. 15, 6/2018
Option 4	5GC	NO	eLTE	NE-DC	Rel. 15, 5/2019
Option 5	5GC	eLTE	-	eLTE	Rel. 15, 6/2018
Option 7	5GC	eLTE	NO	NGEN-DC	Rel. 15, 3/2019

DC: Dual Connectivity
eLTE: Enhanced LTE (data rates 50Mbit/s downlink or 20Mbit/s uplink)

[9.4]

3GPP LTE and 5G: Coexistence (2)

[9.2]

Dynamic Spectrum Sharing (DSS)

- Objective
  - Operate LTE and 5G NR simultaneously in the same frequency band
  - Mainly used in low- and mid-band, which has been used by LTE so far
- How it works
  - Base station transmits LTE and 5G control channels
  - Dynamically allocate channel capacity based on traffic
- Pros:
  - Rapid 5G rollout without LTE capacity loss
  - Flexible transition during device mix (LTE/5G)
- Cons:
  - Additional signaling reduces payload capacity by approximately 10-15%
  - Complex coordination (e.g., MBSFN subframes for collision avoidance)

5G Overview and System Architecture

5G System Architecture - Components

- Radio access network: Next Generation Radio Network (NG-RAN)
  - Essential Component: gNodeB
  - Often centralized realization (5G Cloud RAN)
- Core Network: 5G Next Generation Core Network (5GC)
  - Service-Based Architecture

5G Base Station - gNodeB

- „Next Generation Node B"
  - Base Station for 5G New Radio (NR)
  - Supports 5G NR Air Interface
  - Can be combined with LTE via EN-DC (Dual Connectivity) (see above)

- Components
  - Base Band Unit (BBU)
    - Signal Processing: Generates and decodes the digital baseband signal for all wireless technologies
    - Control: Responsible for cell management and connection to the core network via fiber optics (backhaul)
  - Remote Unit (RU)
    - Signal conversion: Digital baseband ↔ analog RF signal, incl. amplification
    - Position: Directly at the antenna, fiber optic to the BBU (fronthaul)

Reminder: Transport network in LTE

RRH: Remote Radio Head
BBU: Base Band Unit

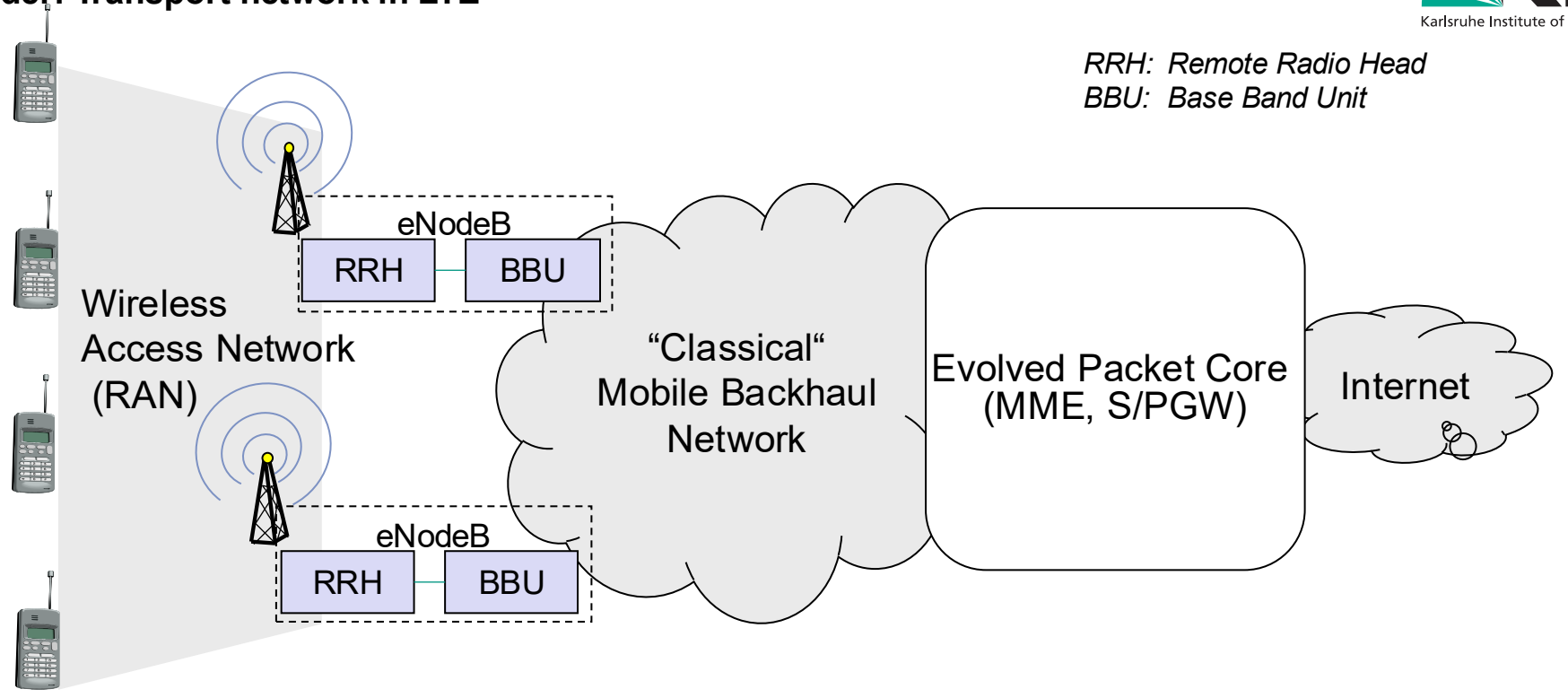

- RRH and BBU in close proximity to the antenna

[9.2]

Transition to a centralized radio access network

Traditional base station

Traditional RAN

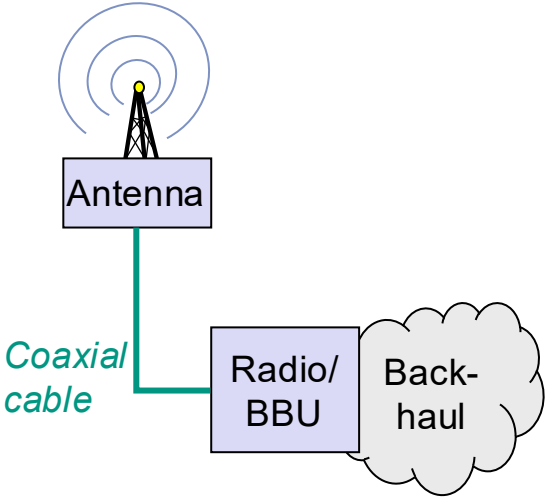

- Conventional base station (with radio components, digital transmission, batteries, ...)

Distributed Base Station

Distributed RAN (D-RAN)

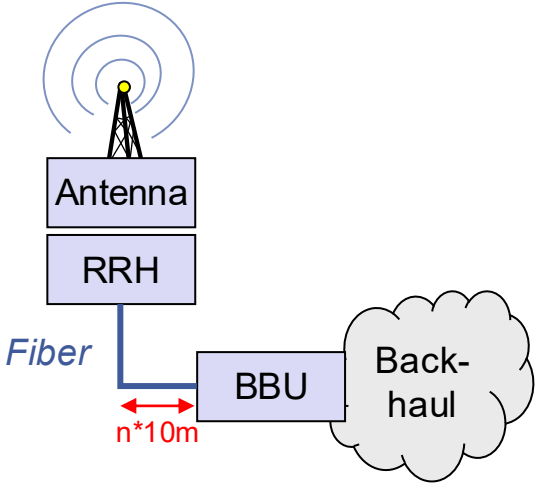

- RRHs close to antenna, reduces power consumption, loss

Centralized Base Station

Centralized RAN (C-RAN)

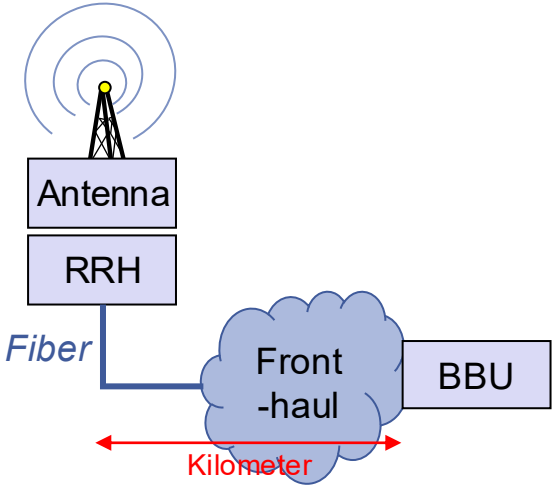

- Centralization of BBU
- BBU Pooling with Dynamic Mapping to RRHs
- Fronthaul needed

[9.2]

4G-LTE Transport Network Architecture

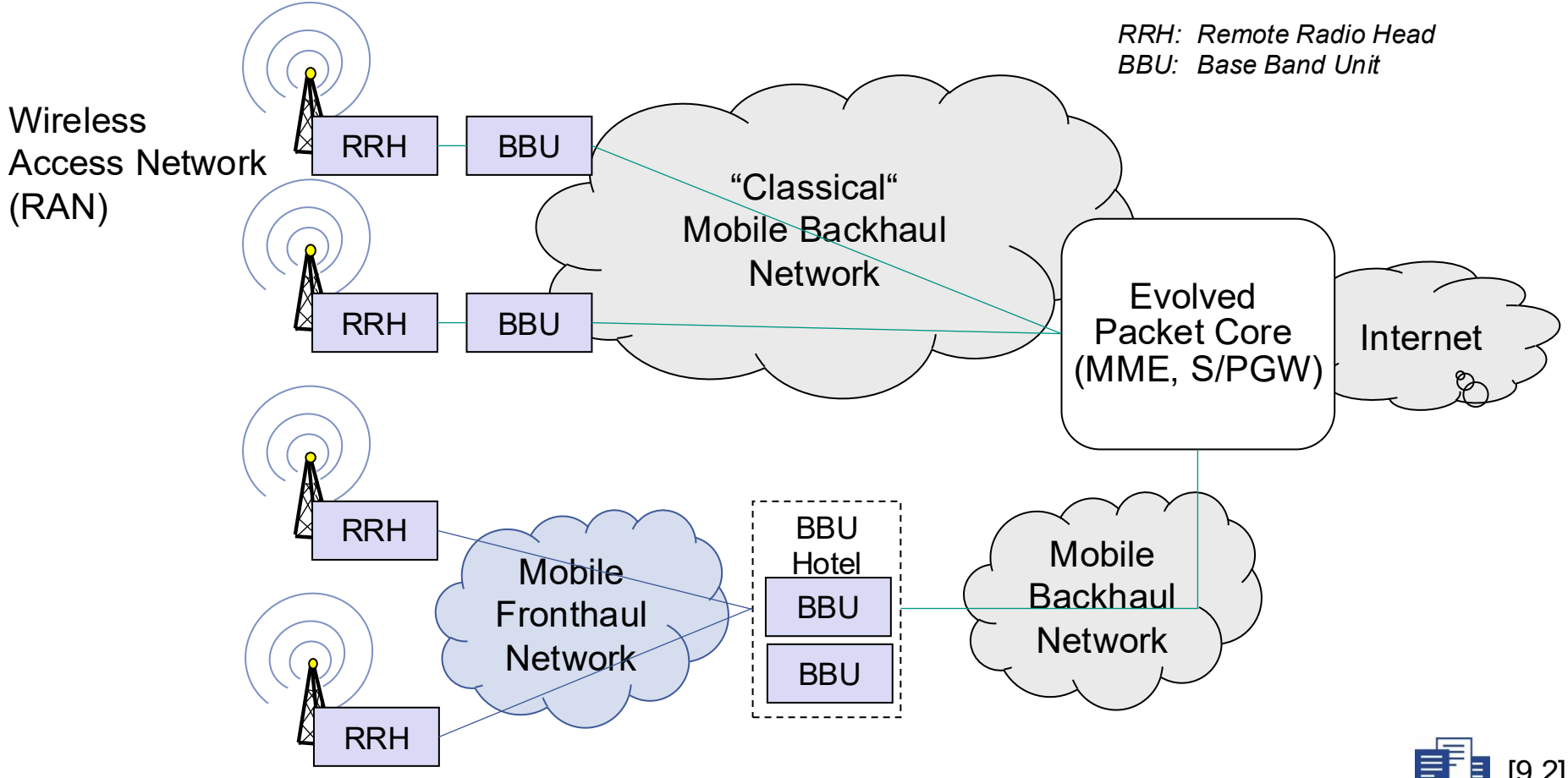

[9.2]

Traditional Fronthaul Protocols

- Open Standards
  - Common Public Radio Interface (CPRI)
    - Initiative von Ericsson, Huawei, NEC, Nortel Networks, Siemens
    - Widely used
  - Open Base Station Architecture Initiative (OBASI)
    - Initiative von Nokia, NEC, LG, Samsung

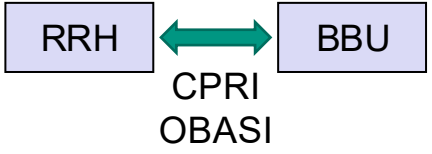

- Features von CPRI
  - Mainly point-to-point
  - High bandwidth
  - Transmission mode based on SDH technology for optical networks

- Cons of CPRI
  - Networking inflexible, limited to fiber optics
  - Low transmission efficiency
  - High demands on transmission resources (wavelengths, optical fibers, ...)
  - Operation, administration and maintenance difficult

[9.2]

Challenges for Fronthaul Technology

- CPRI inefficient due to high bandwidth requirements
- New wireless technologies (MIMO, carrier aggregation, ...) enable data rates in the Gbit/s range
  - Example: 64x64 MIMO with 100 MHz bandwidth requires 400 Gbps for CPRI
- Radio technology is limited by fronthaul technology

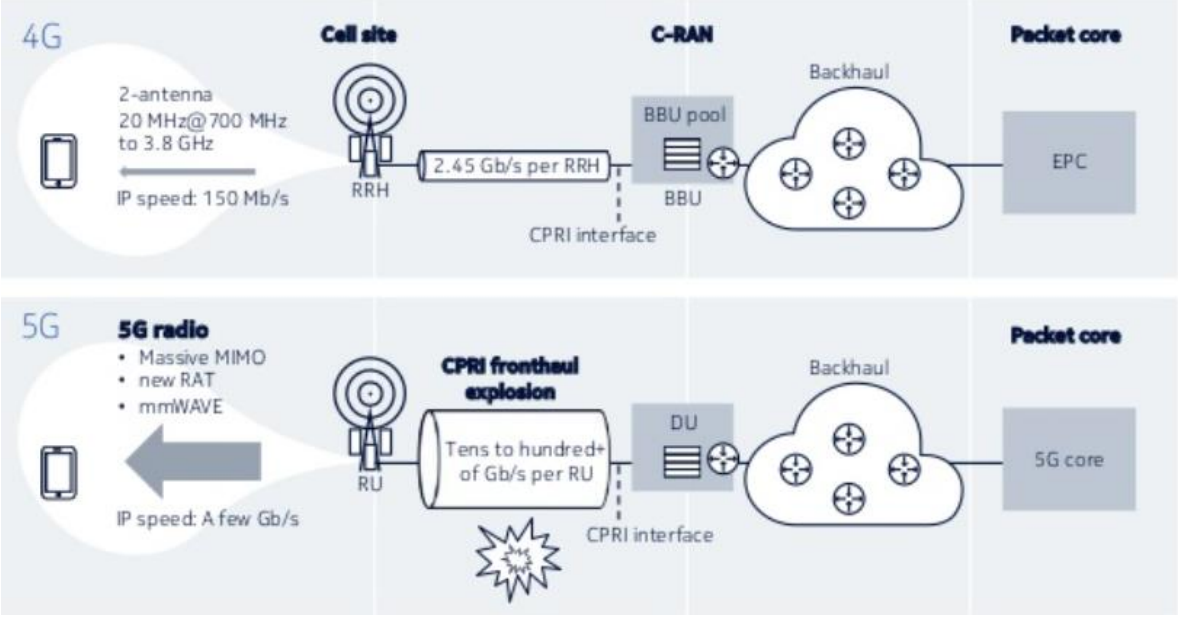

RU: Radio Unit
DU: Distributed Unit

[9.2]

Solution: Splitting RAN Functions (1)

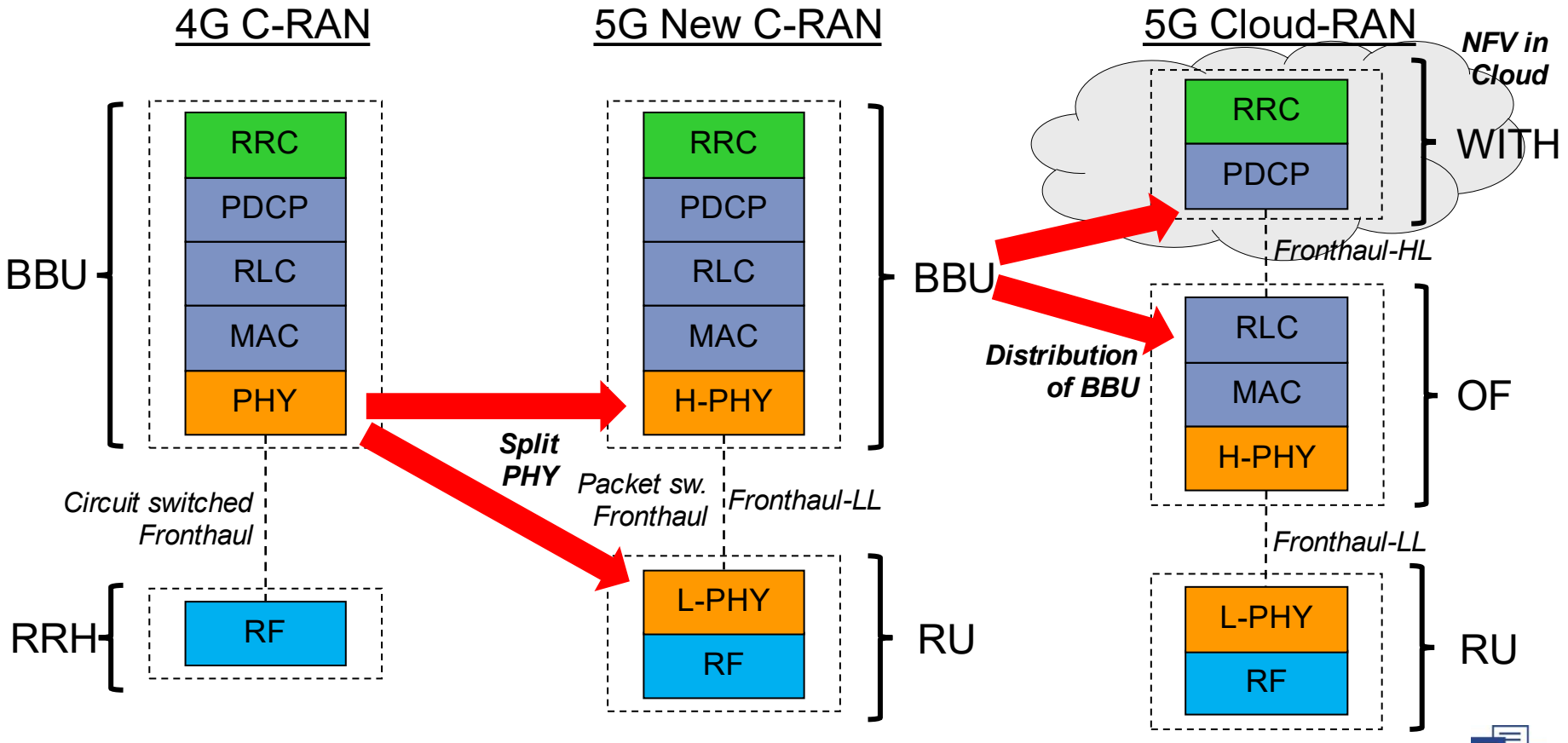

RRC: Radio Resource Control
PDCP: Packet Data Convergence Protocol
RLC: Radio Link Control RF Radio Transmission

MAC: Medium Access Control
PHY: Physical Layer

CU: Central Unit
DU: Distributed Unit

[9.2]

Solution: Splitting RAN Functions (2)

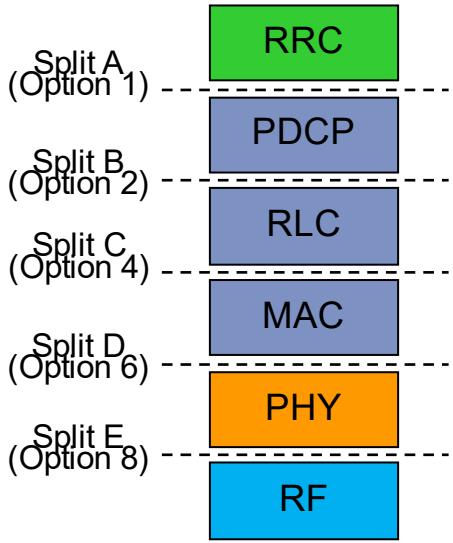

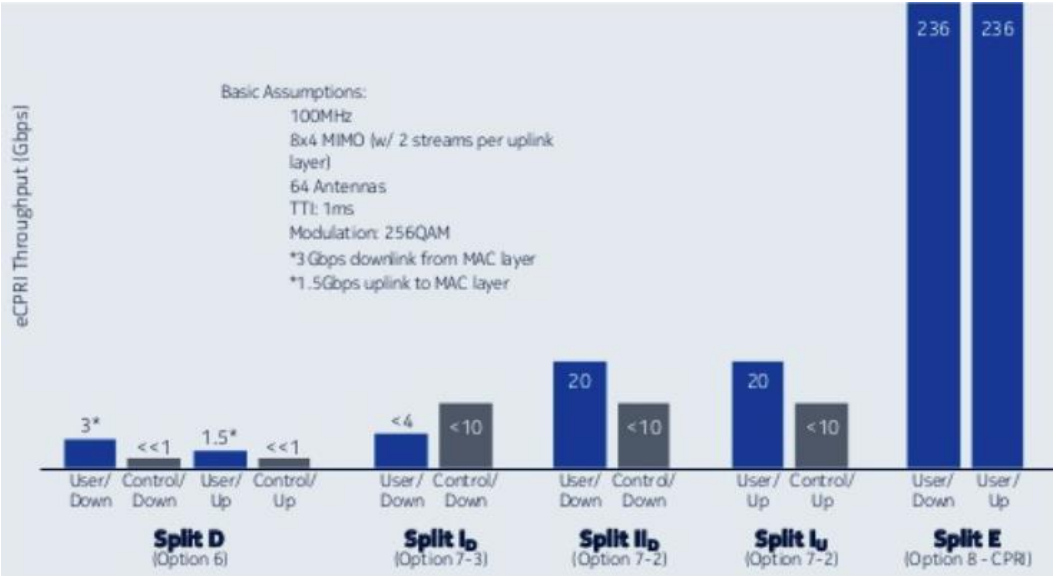

- The higher the split, the lower the bandwidth requirements

[9.2]

5G Next Generation Core Network: Point-to-Point Reference Architecture

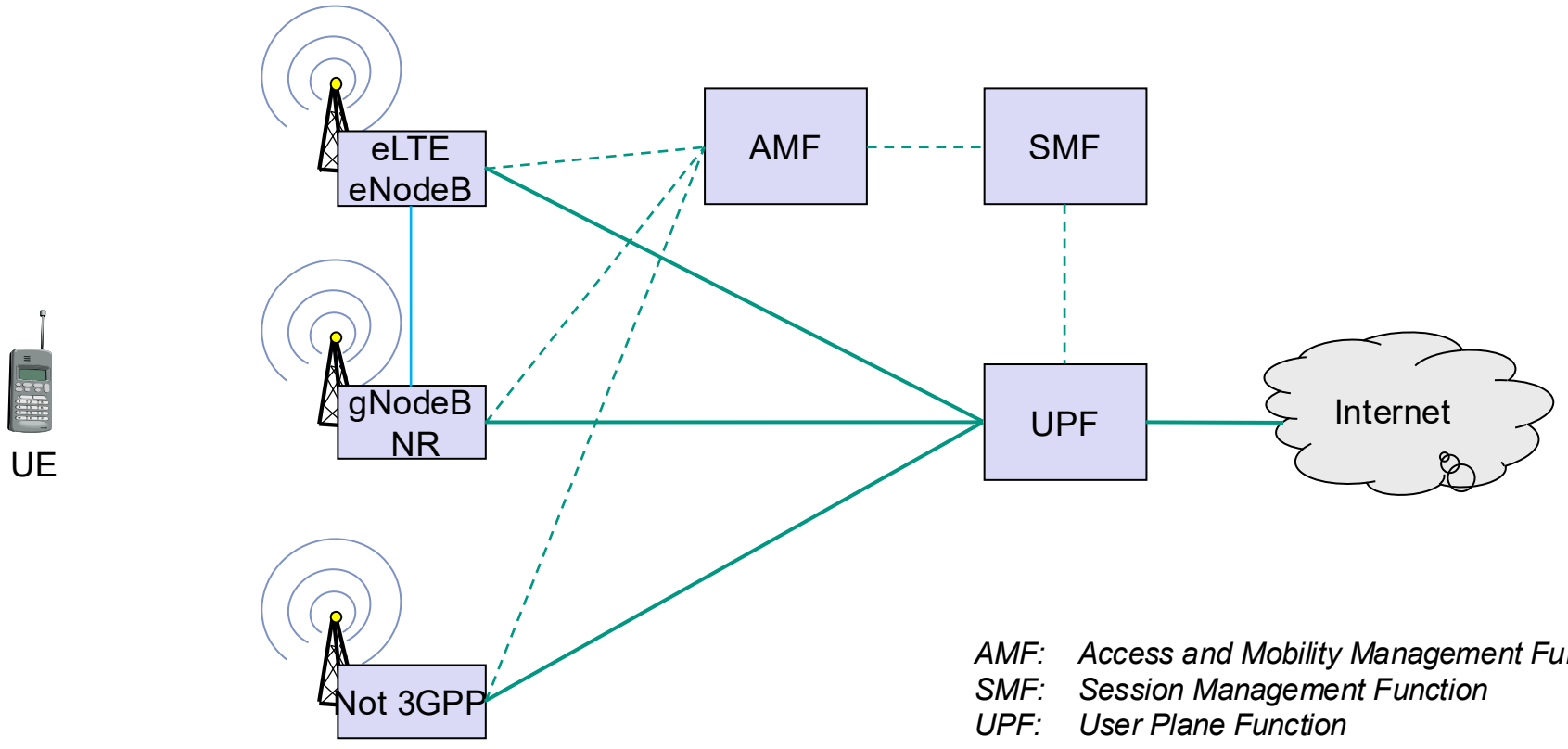

AMF: Access and Mobility Management Function
SMF: Session Management Function
UPF: User Plane Function
: User Plane
: Control Plane

[9.2]

5GC: Service-Based Reference Architecture (1)

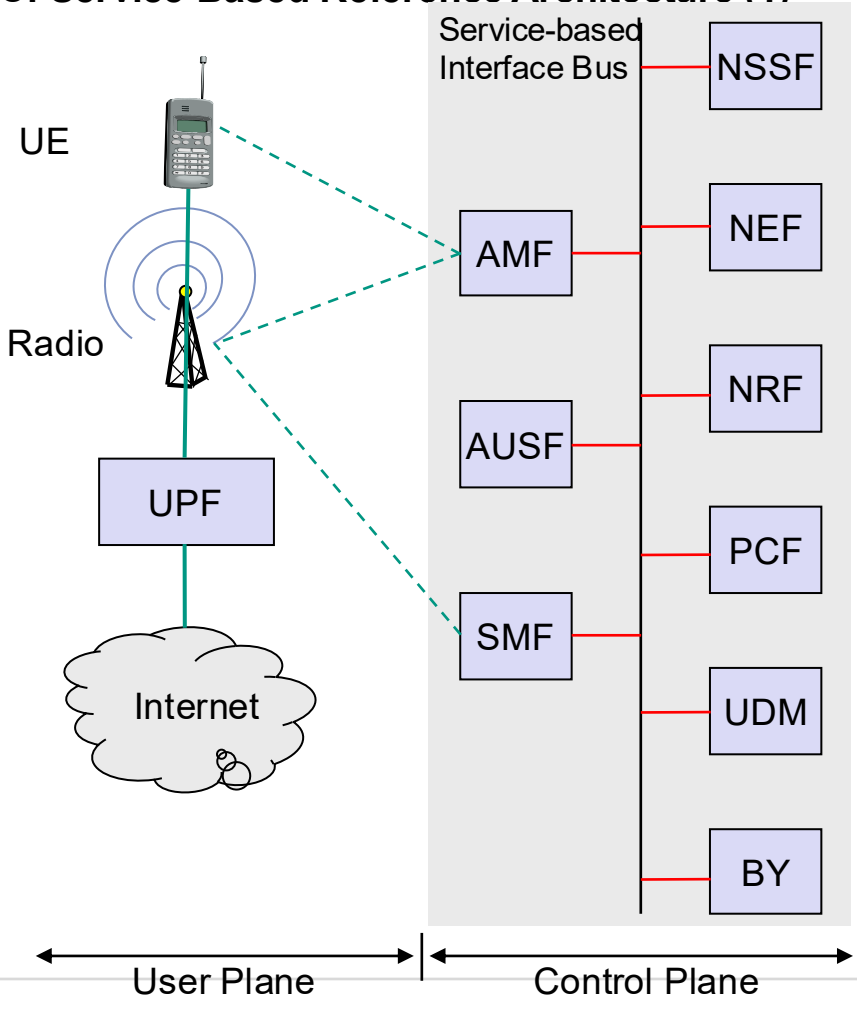

- All network functions accessible via service-based interface bus
  - REST APIs over HTTP/2
- User Plane Function (UPF)
  - PDU Session Management, Routing & Forwarding, Packet Inspection, Policy Enforcement, Quality of Service Support
- Access and Mobility Management Function (AMF)
  - Mobility management, management of registrations and connections
- Authentication Server Function (AUSF)
  - UE authentication
- Session Management Function (SMF)
  - Session management, IP address assignment

5GC: Service-Based Reference Architecture (2)

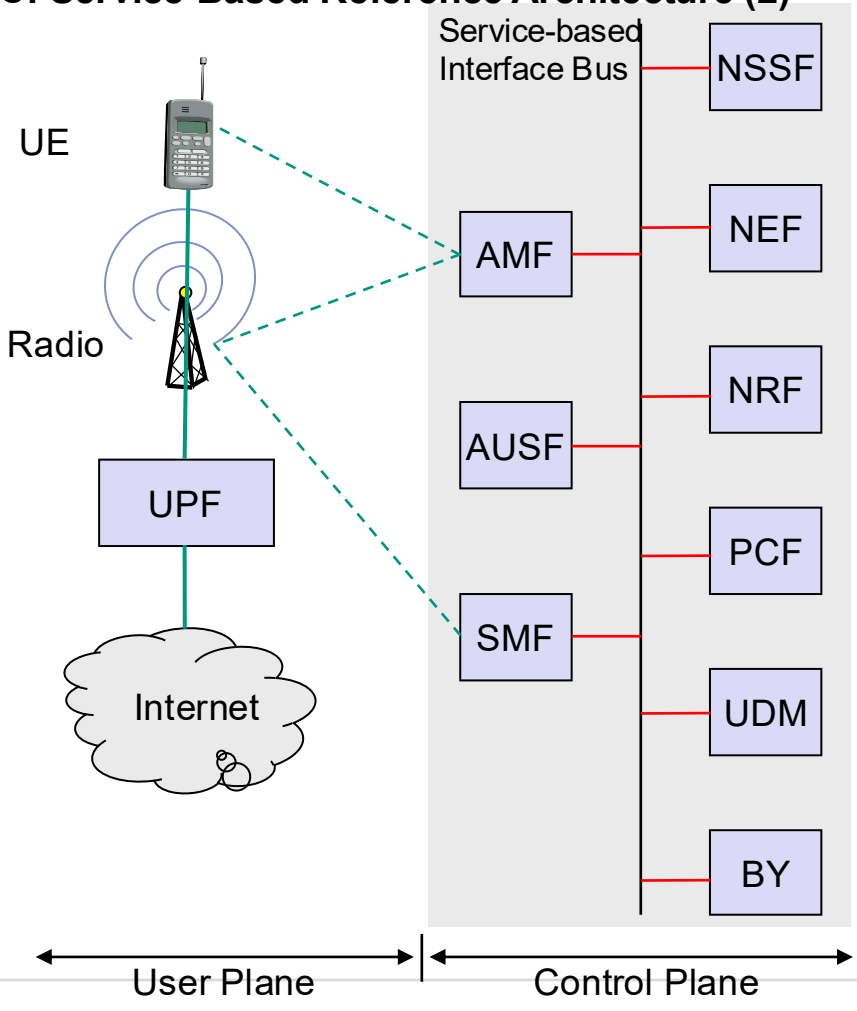

- Network Slice Selection Function (NSSF)
  - Manages Network Slices
- Network Exposer Function (NEF)
  - Provides access to services & resources for external applications
- Network Function Repository Function (NRF)
  - Management of network function instances, service registration & search
- Policy Control Functions (PCF)
  - Implementation of policies, access to contract options
- Unified Data Management (UDM)
  - User identification and authentication, management of contract options, permissions for roaming
- Application Function (AF)
  - Provide access to network functions, resources, policies for end users

[9.5]

Function Placement – Logical View

MEC: Multi access Edge Computing
CDN: Content Distribution Network

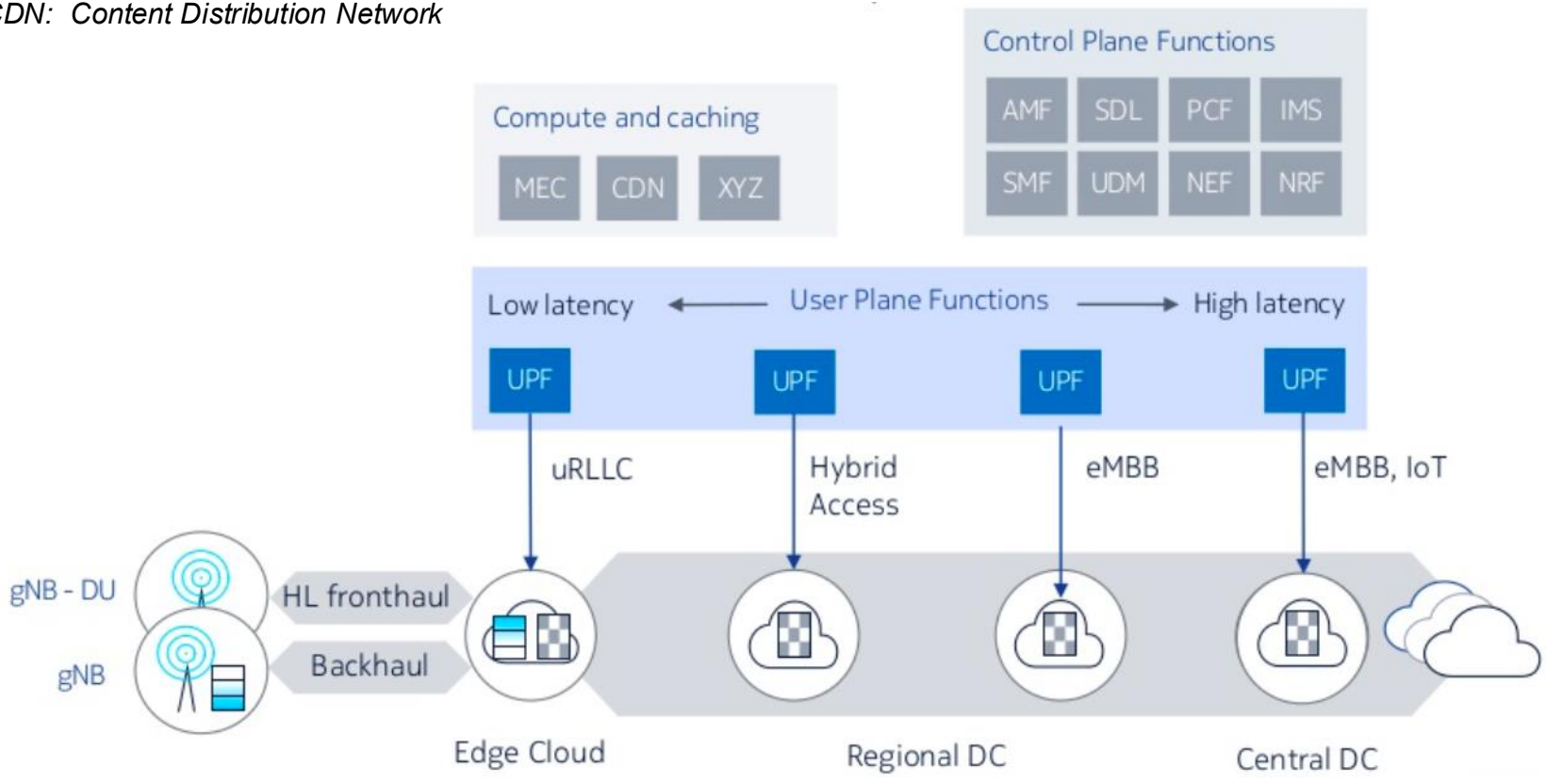

[9.2]

Function Placement – Physical View

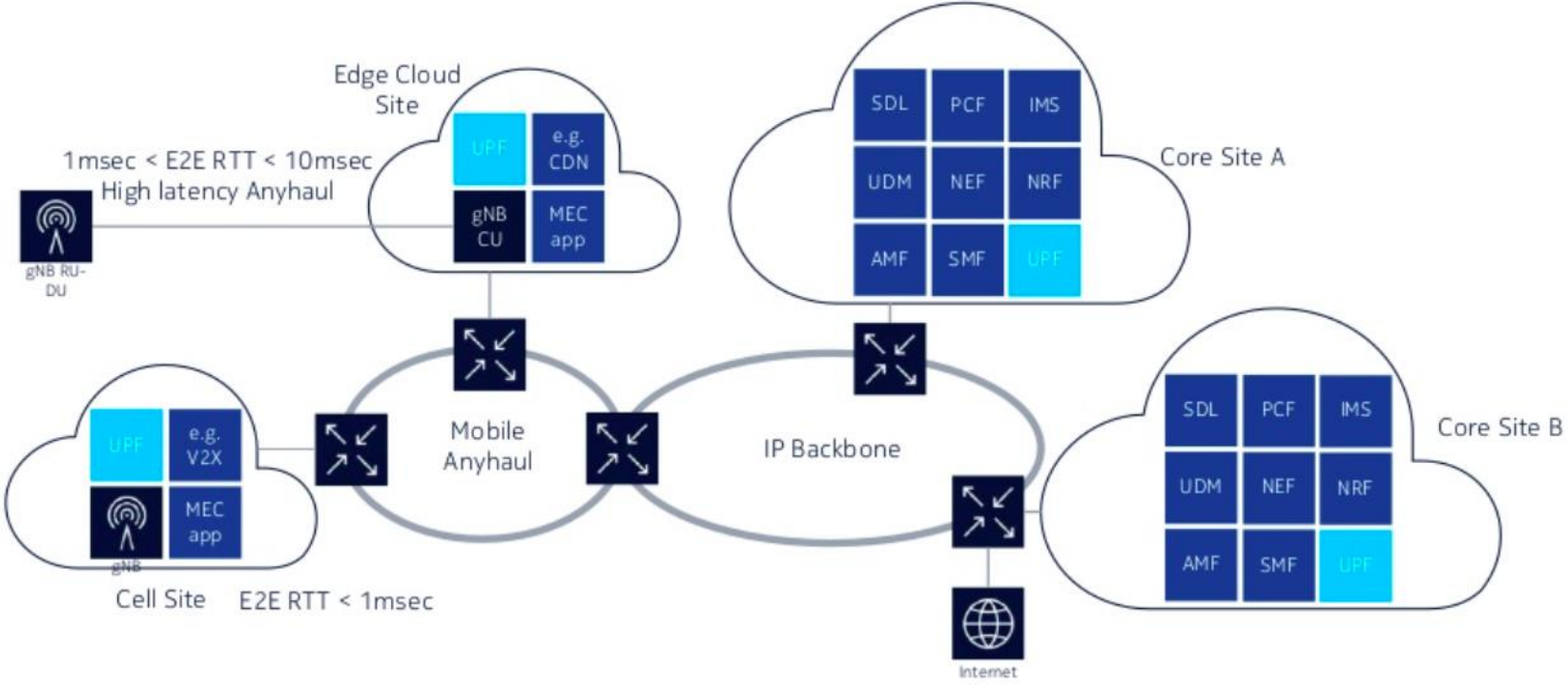

[9.2]

Details about the service-based architecture

- Interfaces to Functions
  - Namf – Access Management Function
  - Nsmf – Session Management Function
  - Nausf – Authentication Server Function
  - Nudm – Unified Data Management
  - Nudr – Unified Data Repository
  - Npcf – Policy Control Function
- Protocols & Principles:
  - Communication via HTTP/2
  - Data Format: JSON
  - REST APIs, stateless
  - Control/User Plane Separation (CUPS)
- Implementation:
  - Microservices for AMF, SMF, UPF, PCF etc.
  - Containerization (e.g., Docker) instead of VMs
  - Orchestration with Kubernetes
  - Cloud-native: Scalable, flexible, automated

Network Slicing

- Multiple logical networks within a joint physical infrastructure
  - Meet different requirements (e.g., high bandwidth, low latency, IoT) in parallel
- Technical implementation
  - Each slice includes its own RAN profile and core functions (AMF, SMF, UPF)
  - UEs can use up to 8 slices at the same time
  - Slice selection when connection is established by the UE
- Advantages
  - Flexibility for different applications
  - Efficiency without compromise like LTE extensions

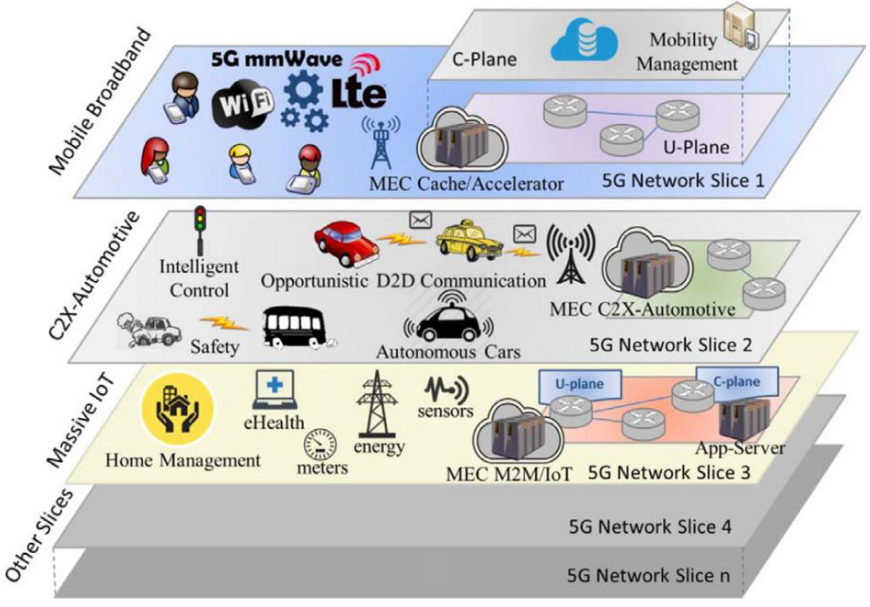

[9.1]

Wireless Transmission in 5G

Air interface: Innovations compared to LTE

- Flexible bandwidth / spacing of OFDM subcarriers (numerology)
  - Supports of the subcarriers: 15 kHz to 120 kHz (LTE: fixed 15 kHz)
- Mini slots & dynamic TDD
  - UL/DL configuration per slot (LTE: static)
- Massive MIMO & Beamforming
  - > 64 antenna elements, dynamic beamforming
- Bandwidth Parts (BWP)
  - Energy-saving partial bandwidths for end devices
- New reference signals
  - CSI-RS for Precise Beamforming (LTE: CRS)

OFDM in 5G NR

- Basic principle
  - Orthogonal Frequency Division Multiplexing (OFDM) for Downlink and Uplink
    - Analog LTE
    - Robust against multipath propagation / inter-symbol interference (ISI)
    - Enables flexible channel bandwidths
- OFDM variants
  - CP-OFDM (Cyclic Prefix OFDM) for downlink and uplink
    - Slightly modified compared to OFDM in LTE downlink
  - Optional Discrete Fourier Transform Spread OFDM (DFT-S-OFDM) in uplink
    - Known from LTE as SC-FDMA
    - more energy-efficient
- Modulation
  - QPSK, 16-QAM, 64-QAM, 256-QAM

Flexible Numerology in 5G NR

- Definition Numerology
  - Configuration of subcarrier bandwidth / spacing and symbol duration
  - Necessary due to use in very different frequency ranges

- Several possible subcarrier bandwidth:
  - 15 kHz, 30 kHz, 60 kHz, 120 kHz
  - Higher bandwidths are created by using shorter symbol times
    - Possible at high frequencies, as greater attenuation reduces the effect of multipath propagation
  - Different bandwidths possible in the same channel
  - LTE: always 15 kHz subcarrier bandwidth

- Effects:
  - Larger bandwidth → shorter symbol times → lower latency
  - Smaller bandwidth → better reach and robustness

- Typical use:
  - FR1: 15 kHz / 30 kHz
  - FR2 (mmWave): 60 kHz / 120 kHz

TDD vs. FDD in 5G NR

- FDD (Frequency Division Duplex)
  - Separate frequencies for uplink (UL) and downlink (DL)
  - Similar to LTE, preferred for FR1
- TDD (Time Division Duplex)
  - UL/DL in the same frequency band, time-separated
  - Flexibly configurable UL/DL ratios
    - Ratio in data volume UL/DL is 1:10
  - No protective distance between UL and DL necessary

Massive MIMO & Beamforming

- Massive MIMO
  - Use of >64 antenna elements
  - Parallel data streams for multiple users (MU-MIMO)

- Beamforming
  - Dynamic alignment of radio beams
  - Improved range and signal quality

- Beam Control Reference Signals
  - Channel State Information Reference Signal (CSI-RS) for precise channel information
    - Choosing the Best Beam for Transmission
    - Also used for MIMO optimization (determination of the best antenna combination) and link adaptation (adaptation of modulation and coding to channel quality)
  - Synchronization Signal Blocks (SSB) for initial alignment (see below)
    - Are sent out in the beamforming direction

- Advantages over LTE
  - Higher capacity, better energy efficiency
  - Necessary for mmWave bands (FR2)

Medium Access in 5G

Symbols and Slots

- Smallest data transmission unit on air interface is a symbol
  - Can transfer different numbers of data bits (2 bits for QPSK to 8 bits for 256-QAM)
  - Transmission time depends on selected numerology of the channel
    - n78 band with 30 kHz subcarriers: 33.33 s
    - In FDD below 3 GHz with 15 kHz subcarriers: 66.67 s

- NR air interface combines 14 symbols into Slot
  - Smallest allocation unit on time axis
    - Slot aggregation for high data rates possible
    - Mini slots for latency-critical applications possible
  - Transmission time of slot also depended on numerology

5G Resource Grid

- Scheduling-unit
  - LTE: Subframe (1 ms)
  - NR: Slot (duration depends on subcarrier bandwidth)
- Subframe length
  - LTE: important for scheduling
  - NR: no longer important
- Number of slots per subframe
  - 30 kHz subcarrier (band n78): 2 slots / 1 ms
  - 15 kHz subcarrier (<3 GHz): 1 slot / 1 ms
- Physical Resource Block (PRB)
  - Smallest allocation unit on frequency axis
  - LTE: 12 subcarriers (frequency axis) × 7 symbols (time axis)
  - NR: 12 subcarriers × variable number of symbols (depending on numerology)
- Example: Band n78 (100 MHz)
  - 273 PRBs → 98.28 MHz usable bandwidth
  - Remaining bandwidth = Gard distance

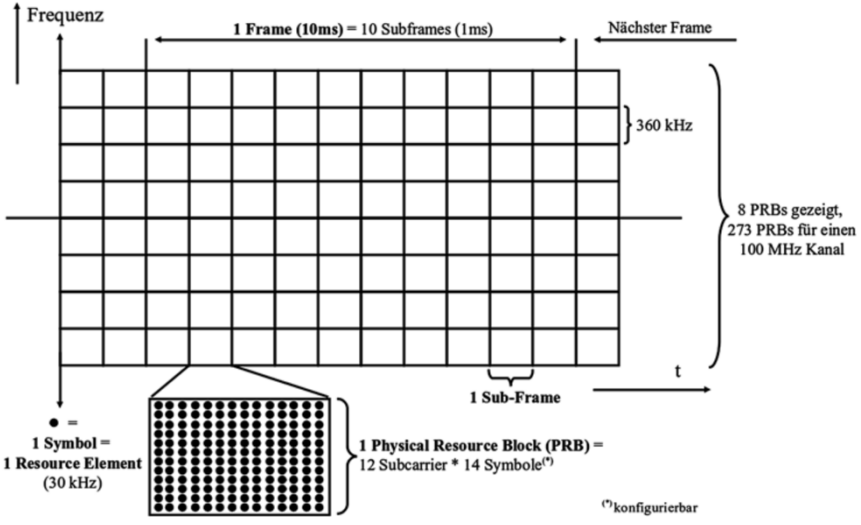

[9.6]

Synchronization Signal Block (SSB)

- Enables UE to
  - Find the network after switching on
  - Synchronize to transmission

- Content of the SSB
  - PSS (Primary Synchronization Signal)
  - SSS (Secondary Synchronization Signal)
  - PBCH (Physical Broadcast Channel)

- Structure
  - 20 PRBs → approx. 7.2 MHz at 30 kHz subcarrier
  - 4 OFDM-Symbol:
    - PSS & SSS je 1 Symbol
    - PBCH over 3 symbols

- Interval
  - Configurable
  - Z.B. in Band n78: 1 SSB every 2.5 ms

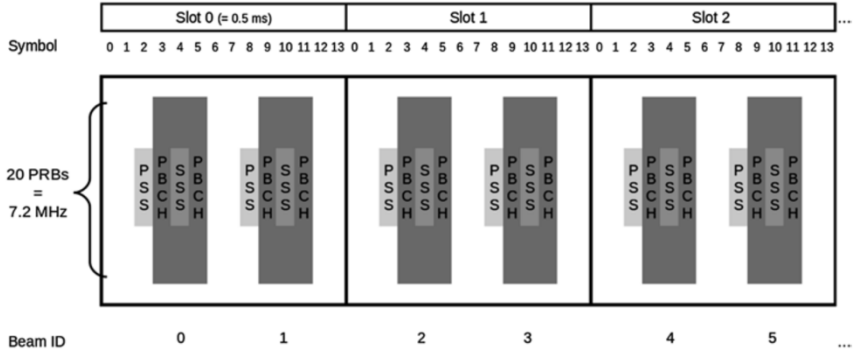

[9.6]

TDD Slot Formats

- 5G mostly uses TDD (Time Division Duplex)
  - UL and DL in the same frequency band, separated in time
- Slot Types
  - Downlink (DL)
  - Uplink (UL)
  - Special Slot
    - Includes DL part, guard distance, UL part
    - Allows switching between sending and receiving
- Flexibility
  - Dynamic UL/DL configuration depending on traffic load
  - Mini-slots für Ultra-Low-Latency
- Example
  - Band n78: typical ratio DL:UL ≈ 3.8:1
    - In the illustration exactly 104:32 symbols = 3.25:1

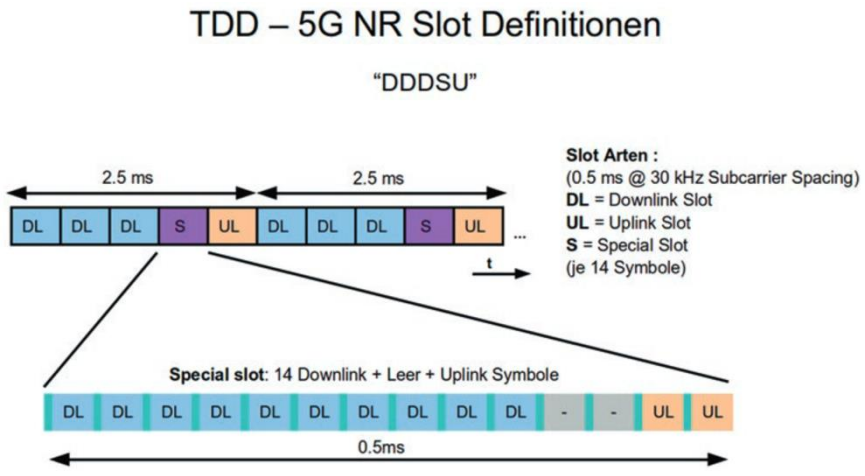

[9.6]

Downlink Channel Mapping

Logical channels

PCCH	Paging Control Channel
BCCH	Broadcast Control Channel
DTCH	Dedicated Traffic Channel
DCCH	Dedicated Control Channel

Transport channels

PCH	Paging Channel
BCH	Broadcast Channel
DL-SCH	Downlink Shared Channel

Physical Channels

PBCH	Physical Broadcast Channel
PDSCH	Physical Downlink Shared Channel
PDCCH	Physical Downlink Control Channel

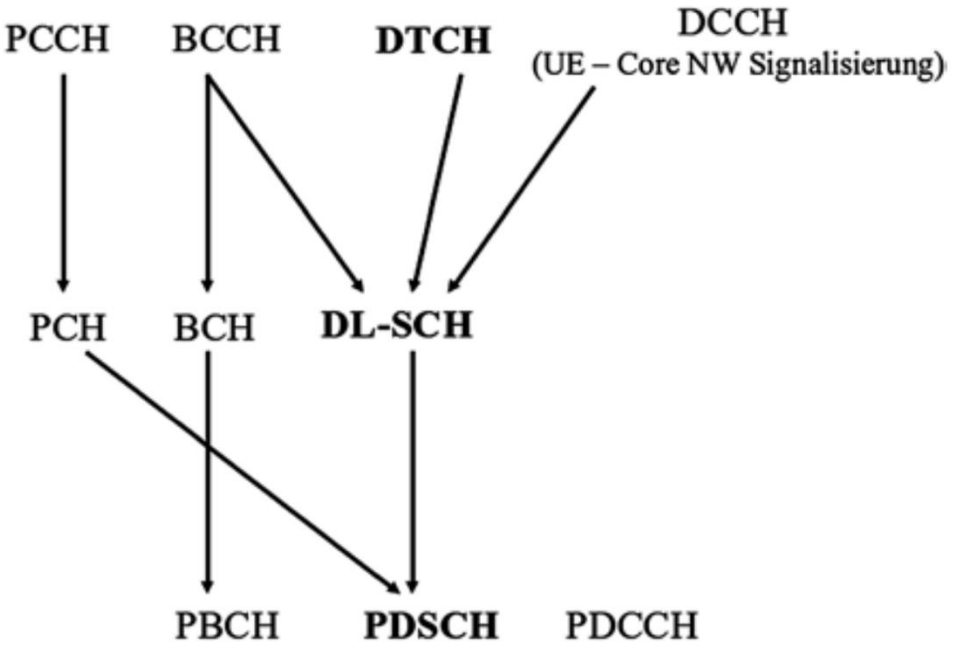

[9.6]

Uplink channel mapping

Logical channels

CCCH	Common Control Channel
DCCH	Dedicated Control Channel
DTCH	Dedicated Traffic Channel

Transport channels

UL-SCH	Uplink Shared Channel
RACH	Random Access Channel

Physical Channels

PUSCH	Physical Uplink Shared Channel
PRACH	Physical Random Access Channel
PUCCH	Physical Uplink Control Channel

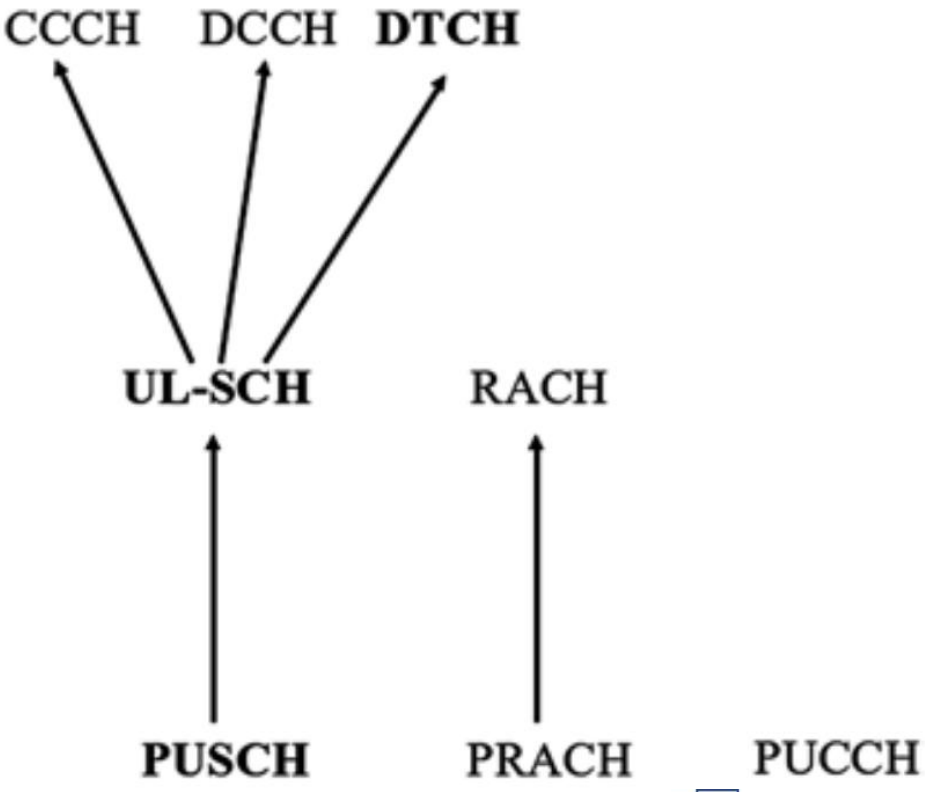

[9.6]

Control & CORESET in PDCCH

- PDCCH (Physical Downlink Control Channel)
  - Transmits Downlink Control Information (DCI)
  - Includes scheduling information for DL and UL
- CORESET (COntrol REsource SET)
  - Area in the Resource Grid for PDCCH
  - Flexibly configurable (size, position, number)
- Difference compared to LTE
  - No fixed control region
  - Dynamic CORESETs for different bandwidth parts (BWP, see below)
- Functionality
  - Resource allocation control
  - Support for Beamforming and Massive MIMO

Bandwidth Parts (BWP)

- Configurable sub-range of the entire channel bandwidth
  - Reduction of energy consumption for large bandwidths
  - Adaptation to device capacities and services
- Features
  - Up to 4 BWPs per direction (downlink/uplink) per UE
  - Dynamic switching between BWPs possible
  - Different CORESETs per BWP
- Example
  - Total channel bandwidth: 100MHz
  - UE active on BWP with 20 MHz
- Advantages over LTE
  - LTE: fixed bandwidth per carrier
  - NR: flexible adaptation for eMBB, mMTC, uRLLC, ...

Scheduling & Latency

- Flexibility compared to LTE
  - Scheduling on a slot basis (0.5 ms on 30 kHz subcarriers)
  - Optional: Mini-slot scheduling for uRLLC (hardly used so far)
- Latency Benefits
  - Uplink assignments apply to the next uplink slot (not like LTE: +4 ms)
  - Round-trip time reduced to approx. 1 ms (LTE: 8–10 ms)

HARQ Mechanisms

- Similar to LTE, NR uses Hybrid Automatic Repeat Request (HARQ)
  - Asynchronous HARQ mechanism (no fixed timing like LTE)
  - DCI includes:
    - HARQ Queue Number (up to 8 Cues)
    - Info whether new data or redundancy version (RV) is being sent
    - Time and resource for ACK/NACK feedback (PUCCH or PUSCH)
- Feedback & Control
  - HARQ indicator in DCI → UE knows when ACK/NACK is sent
  - Uplink HARQ also asynchronous, controlled via DCI
- Advantages over LTE
  - More flexible retransmissions, better adaptation to TDD slot patterns
  - Reduced latency due to faster feedback

Downlink Throughput – Theory vs. Practice

- Theoretical calculation (100 MHz channel, FR1):
  - Transformer Distance: 30 kHz, 28 symbols/ms
  - 273 PRBs, 12 subcarriers each
  - Modulation: 256-QAM (8 Bit/Symbol)
  - MIMO: 4×4
  - Downlink/Uplink Ratio: 3.8:1
  - Overhead: 15 %
  - **Maximum Data Rate ≈ 1.896 Gbps**

- Practical values:
  - Typical: ~1.3 Gbps on 100 MHz channel
  - With LTE/5G Split Bearer: ~1,7 Gbit/s (5G + LTE part)
  - Reasons for deviation:
    - Mains load, signal quality
    - Limited MIMO usage
    - Protocol Overhead

Mobility Management in 5G

Basic Procedures: NSA vs. SA

- Differentiation in connection establishment and mobility management between <u>non-standalone</u> (NSA, EN-DC) and <u>standalone</u> (SA, NR) deployment

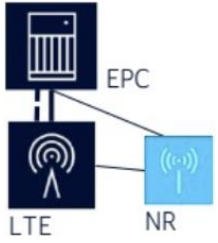

NSA (EN-DC)	SA (NR)
- LTE as an anchor - NR as additional capacity - Signaling via LTE - Core network: EPC - Typical option: 3x	- NR for control and data - No LTE required - Core network: 5GC - Typical option: 2

- Differences in procedures:
  - Initial access: LTE vs. NR
  - Authentication: EPC vs. 5GC
  - Session Management: EPS Bearer vs. PDU Session
  - Mobility: Interface X2 (NSA) vs. Xn (SA)

NSA Deployment with LTE Anchor: Initial Steps

- Search for LTE broadcast channel
  - After switching on/exiting airplane mode, UE searches for broadcast channel of surrounding LTE cells for initial connection
- Random Access Procedure on RACH
  - Endpoint performs random access procedure to obtain resources and initial communication with network
- Establishing a connection with RRC messages
  - Device and network exchange RRC Connection Setup messages to establish the LTE connection
- Dual Connectivity Signaling
  - UE signals dual connectivity capability to add 5G NR cell later

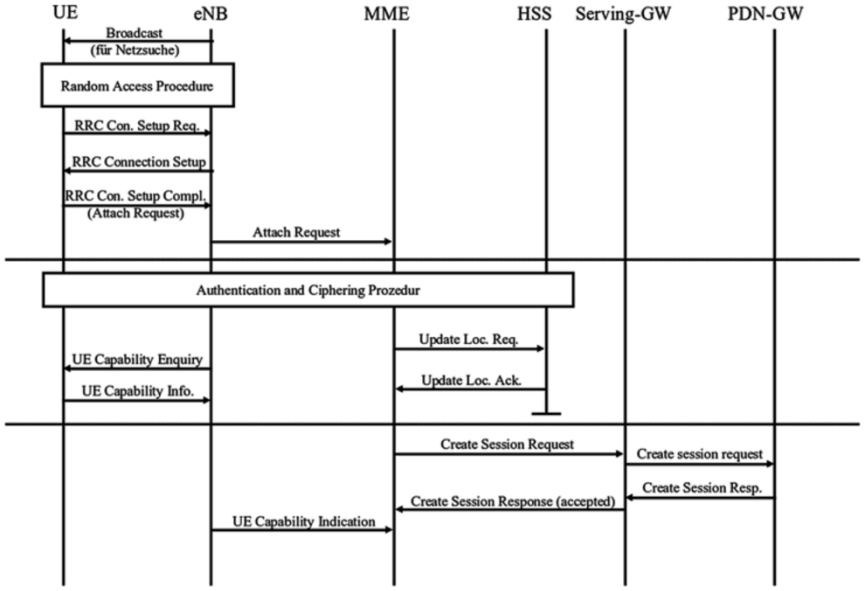

[9.6]

Authentication and Bearer Configuration

- Authentication and encryption
  - The authentication of endpoint occurs after attach request, followed by activation of encryption for secure communication
- Payload tunnels and radio functions
  - Preparation of payload tunnels and interrogation of terminal functions to support future NR cells in the radio network
- Radio Bearer Configuration
  - The eNB configures Radio Bearer and transmits important network parameters such as IP address and Quality of Service to the end device
- LTE connection as a 5G anchor
  - After confirmation by the end device, LTE connection serves as an anchor for the 5G split bearer and connects radio and core network processes

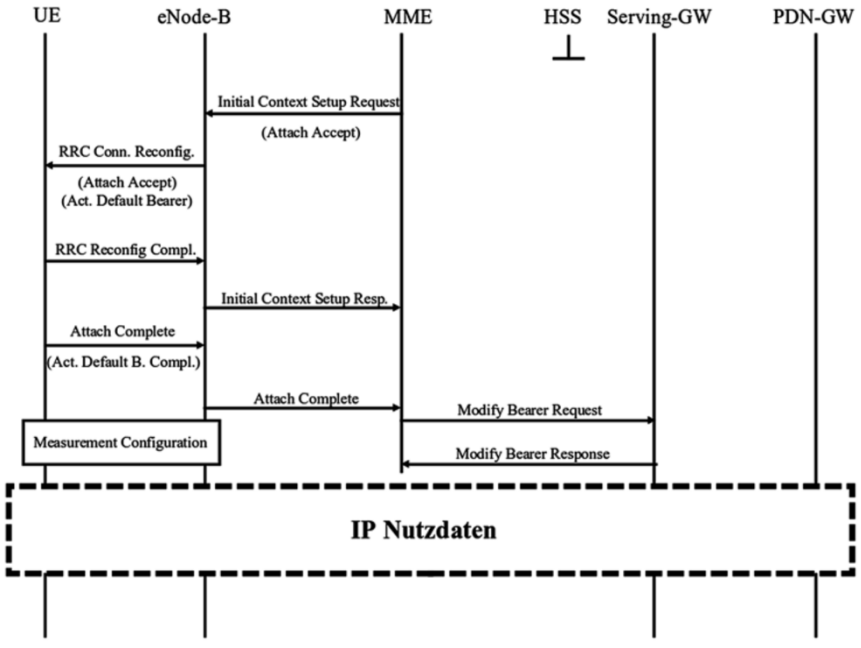

[9.6]

Adding an NR Cell

- Measurement and selection of NR cell
  - UE searches for synchronization signal blocks and reports appropriate NR cells based on thresholds
- Resource reservation and configuration
  - eNB allocates resources and sends RRC Connection Reconfiguration with NR parameters
- Random access and connection setup
  - UE performs a random access procedure to establish the connection to the gNB
- Data flow control and split bearer
  - Once connected, gNB takes over the control of the downlink data flow and shares data between LTE and NR

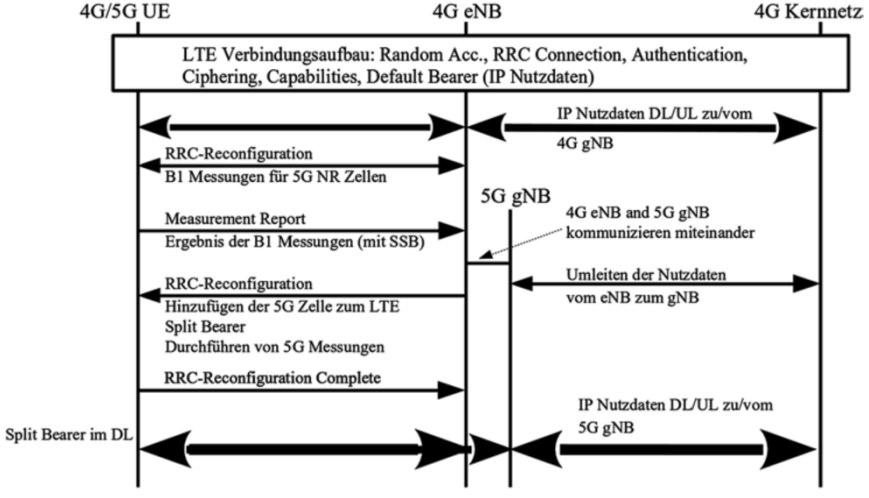

[9.6]

Downlink and uplink in EN-DC operation

- Typical EN-DC configuration
  - Downlink uses LTE and NR at the same time
  - Uplink usually only uses LTE
    - Saves energy, reduces complexity
- Limited terminal transmission power (max. 0.2 W)
  - Makes parallel uplink paths more challenging
  - Therefore, focus on LTE uplink
- NR TDD downlink dominance
  - NR uses TDD with a ratio of 3.8:1 in favor of the downlink
  - Therefore, uplink capacity limited

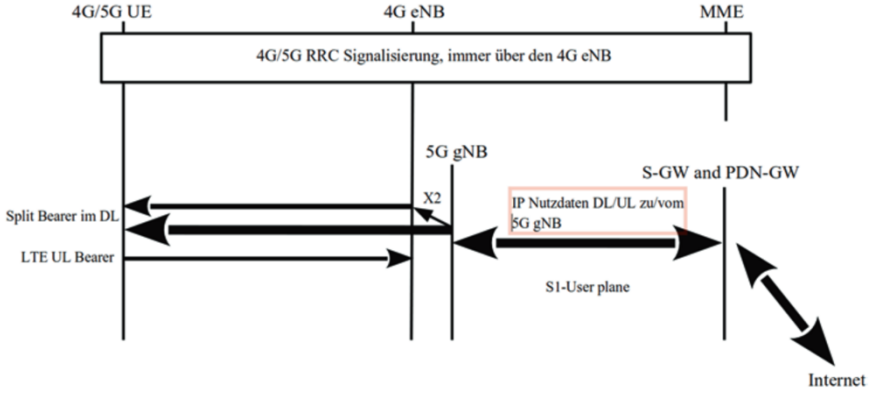

[9.6]

When does a device show "5G"?

- Problem
  - With EN-DC (LTE + NR), "5G" symbol would only appear when NR is active
  - Constantly switching between "4G" and "5G" would be confusing
- Standard solution
  - Introduction of Upper Layer Indication Bits in LTE System Information Block 2 (SIB2).
  - Bit indicates that the cell supports 5G → US can display "5G", even in idle mode.
- Challenges
  - Bit is not directly coupled to NR activation
  - End device must support the 5G band used (e.g. n78 vs. n28)
  - Network operators and manufacturers use different display logics (e.g. modified logo when NR cell is active)
- Access Control
  - HSS includes 5G activation parameters per subscriber
  - In case of restriction, MME sets Dual Connectivity with New Radio (DCNR) Restriction Bit
    → UE ignores Upper Layer Indication Bit

Handover between locations

- Separate handover for LTE and NR
  - LTE and NR work independently, so handovers for both technologies can be performed separately
- Rolle of X2-Interfaces
  - X2 interface enables communication between eNB and gNB for establishing new NR connections during handover
- Data forwarding during transition
  - Payload data is routed through indirect tunnels to avoid interruptions during handover
- Ensuring continuous data transmission
  - Network ensures uninterrupted data transmission
  - Important for services like video streaming and VoIP

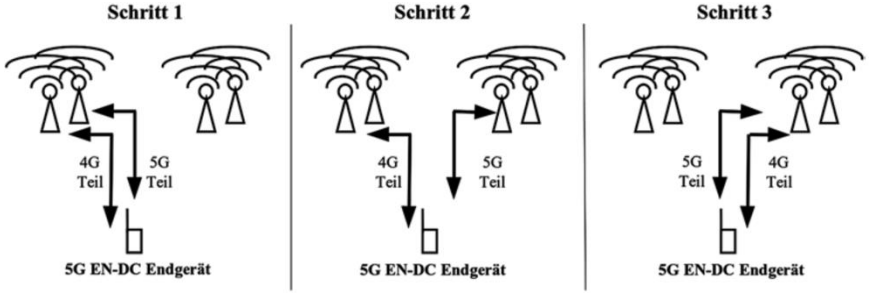

[9.6]

VoLTE in Non-Standalone Mode

- VoLTE = Voice profile for LTE based on IP Multimedia Subsystem (IMS)
  - Standardised by GSMA, uses IP-based signalling (e.g. Session Initiation Protocol SIP)
  - Adopted unchanged for non-standalone access in 5G
- Why not a split bearer for VoLTE?
  - Technically possible but not used in practice.
  - Reasons:
    - LTE anchor is usually on a lower frequency band → larger transmission range
    - Voice quality more stable when changing cells
    - No influence from NR reconfiguration
- Network Operator Strategies
  - VoLTE bearer only transmitted via LTE
  - Some terminate EN-DC Internet bearer during VoLTE connection
  - Others retain EN-DC for Internet connectivity, but reduce transmitting power for LTE share
- Advantage:
  - Maximum transmitting power for LTE while VoLTE → stable voice connection.

Standalone Deployment: Basic Procedures

- Main tasks of the core network (5GC)
  - User management (authentication, identity)
  - Connection Management
  - Mobility Management (Handover, Tracking)
  - Session Management (Data Paths, QoS)
- Protocols and functions
  - NAS protocol for signaling between end device and AMF
  - Separation of registration and session establishment (unlike LTE)
  - Use of HTTP/JSON for service-based communication between network functions
- Important steps
  - Establishing an RRC connection to the gNB
  - Registration with AMF (incl. authentication and security activation)
  - Session setup via SMF and UPF for Internet access or IMS

Connection Management (CM)

- RRC Connection States
  - Connection Management controls the 5G connection states such as RRC-Connected, RRC-Idle and new RRC-Inactive mode for efficient communication
- Advantages of the RRC-Inactive mode
  - Reduces tunnel constructions and teardowns and lowers energy consumption while quickly resuming data transmission
- Role of the AMF in the CM
  - Access Management Function manages signaling and routes session requests to Session Management Function
- Efficient use of resources
  - The CM architecture improves the use of network resources and optimizes the user experience during sporadic traffic

Registration Management

- Establishing a connection in the 5G network
  - Registration starts with establishing RRC and NAS connections to the AMF
- Authentication and security
  - After the SUCI is sent, authentication and activation of encryption and integrity check takes place
- Management of user data
  - AMF registers with the UDM and subscribes to notifications for changes to participant information

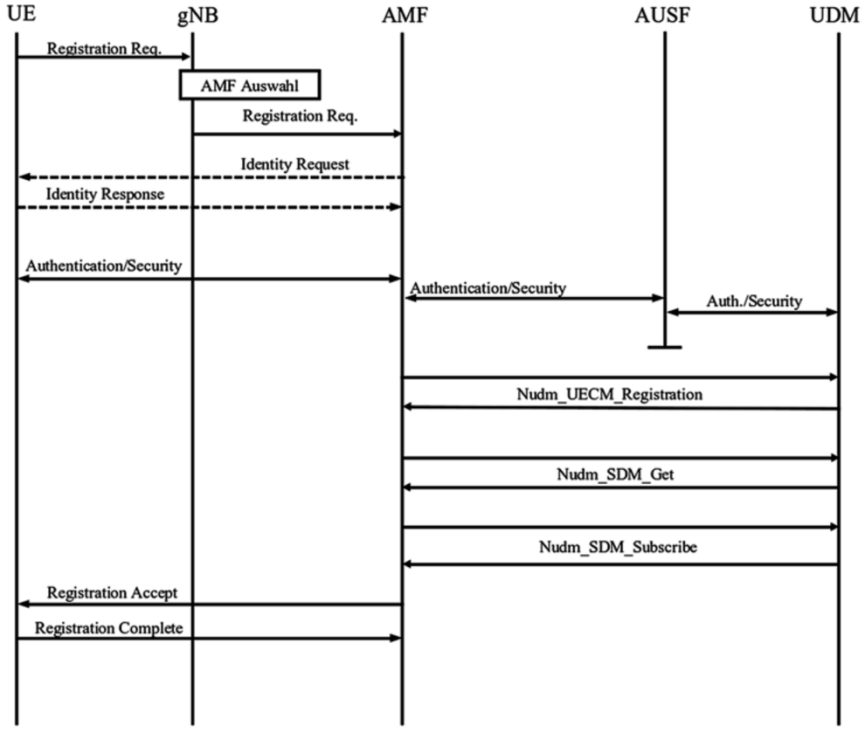

[9.6]

Session Management and GTP Tunnels

- Protocol Data Unit Session (PDU-Session)
  - Logical data connection between end device and UPF
  - Enables exchange of IP packets with external networks
  - End device initiates PDU session to establish a data connection to Internet or services
- Role of SMF and UPF
  - SMF coordinates session, UPF serves as anchor for data transmission in the network
- GTP Tunnels and Mobility
  - GTP forwards IP packets in tunnels between gNB and UPF for seamless mobility without IP address changes
- Session configuration and security
  - Session setup includes IP assignment, QoS configuration, and activation of security mechanisms

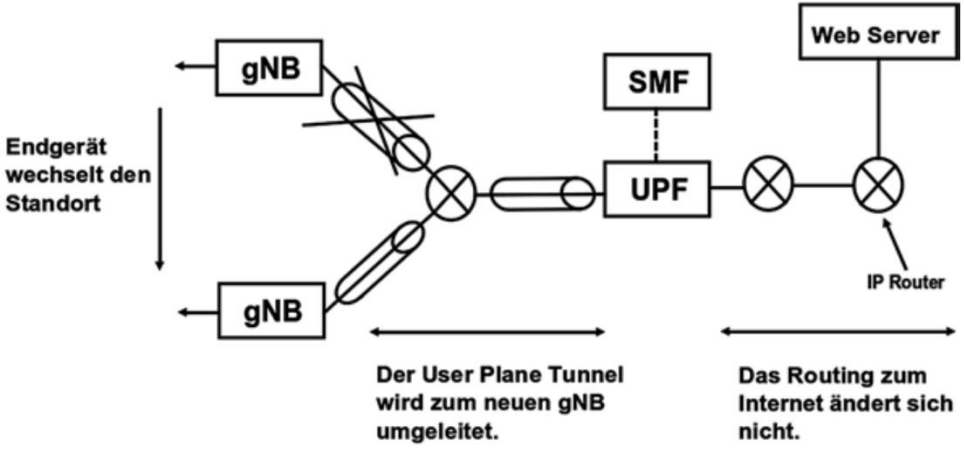

[9.6]

Message Flow During Session Establishment

- Session establishment process
  - The process starts with Session Establishment Request from the end device to the AMF and involves various network elements
- Resource reservation and tunnel construction
  - SMF allocates resources and establishes payload tunnels over UPF to ensure efficient data transmission
- Configuration of UE
  - gNB configures the radio bearers and transmits network settings such as DNS and IPv6 to the end device
- Control and user plane separation
  - Separation of control and data level by means of GTP tunnels enables flexibility and efficiency

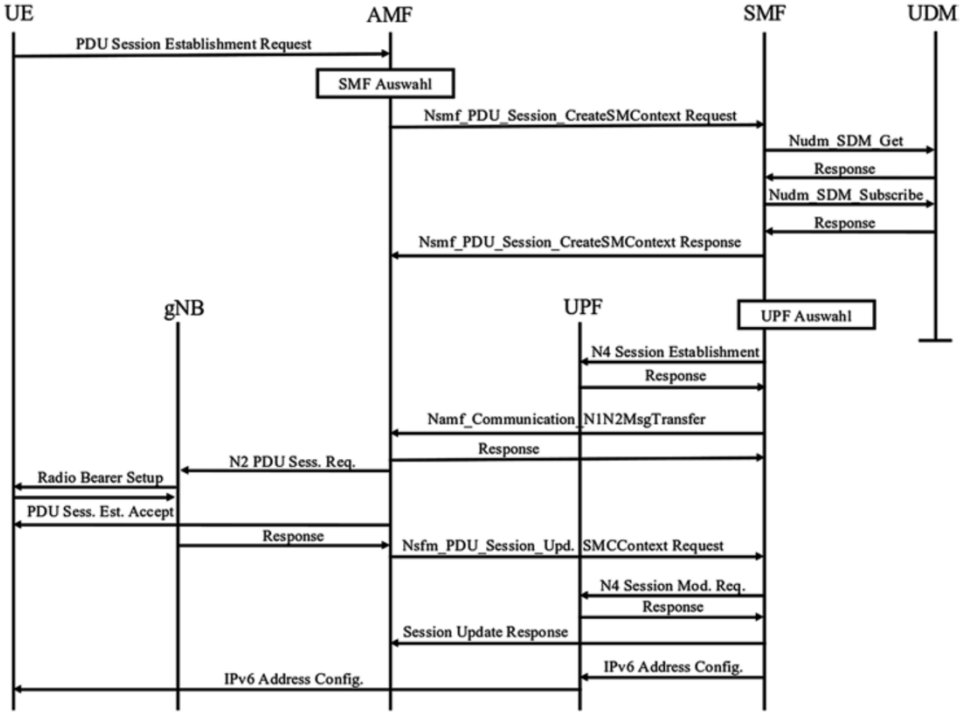

[9.6]

Handover Procedures in the 5G Core Network

- Mobility management in 5G
  - Mobility Management enables seamless transitions between gNBs for uninterrupted data transmission during device movement
- Communication via Xn interface
  - Xn interface connects source and destination gNBs to forward payloads during the handover process
- Resource reservation and tunnel construction
  - After resource reservation, an indirect tunnel is established between gNBs to forward data during transition
- Path Switching and UPF Update
  - AMF processes the Path Switch Request message to update the payload tunnel endpoint in the UPF

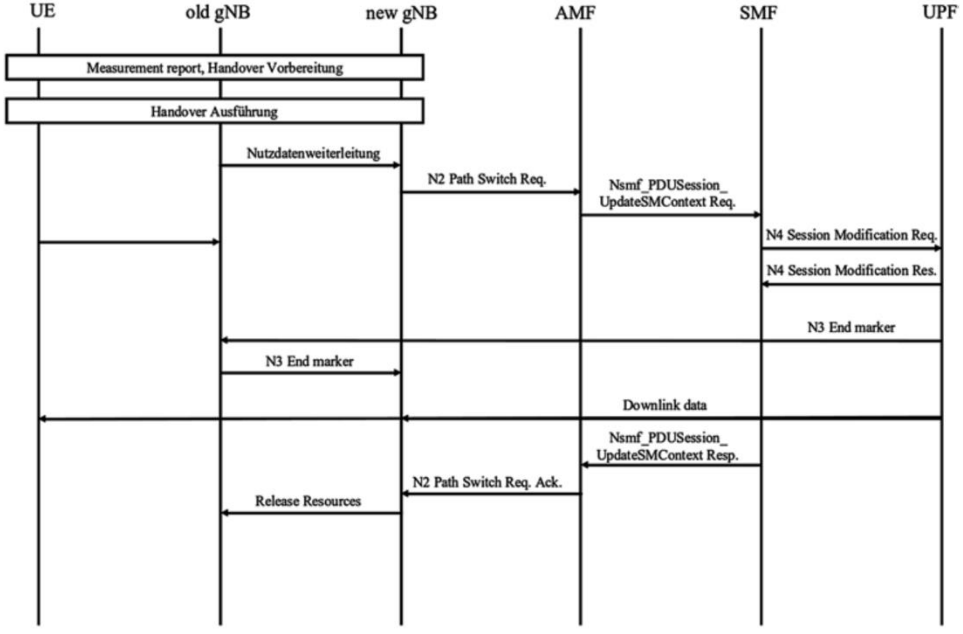

[9.6]

New security features and SUCI

- Participant ID encryption
  - The SUPI (5G version of IMSI) is encrypted in SUCI to protect identities in transit and prevent IMSI catching
- Network Authentication
  - The endpoint authenticates the network to prevent man-in-the-middle attacks and ensure secure connections
- SEPP for international roaming
  - Security Edge Protection Proxy (SEPP) feature protects the integrity and confidentiality of signaling when roaming between networks

Summary and Outlook

Summary: Differences to LTE

- Air interface
  - Flexible Numerology (15–120 kHz instead of fix 15 kHz)
  - Slot-based (0.5 ms) instead of subframe (1 ms) scheduling
  - Mini-Slots for Ultra-Low-Latency
  - Massive MIMO & Beamforming
  - TDD preferred, bandwidth up to 100 MHz (FR1) / 400 MHz (FR2)
- Core network
  - Service-based architecture (HTTP/JSON)
  - New features: AMF, SMF, UPF instead of MME, S-GW, P-GWs
  - Registration and session setup separately
- Security & Mobility
  - SUCI (encrypted SUPI) instead of IMSI, SEPP for roaming
  - New state: RRC-Inactive
  - Xn interface for gNB handover

Outlook: 5G Advanced (5G-A) and 6G

- 5G Advanced (2025–2030)
  - Standardization: 3GPP Release 18 (2023), Release 19 (2024)
  - Higher data rates (>10 Gbps)
  - Improved latency (<1 ms)
  - AI-powered network optimization
  - Energy efficiency and sustainability
  - Support for XR, IoT, Industry 4.0
  - Rollout: First installations from 2024, broad rollout from 2025–2026

- 6G (from 2030 on)
  - Vision: "Internet of Senses", immersive communication
  - Terahertz frequencies
  - Native AI on the web
  - Holographic communication
  - Ultra-low latency (<0.1 ms)
  - Status: Research and standardization start now, commercially from around 2030

Exercises – 5G

9.1 What are the application profiles in 5G networks and how do they differ?
9.2 What are the differences in the construction of the radio access network between 4G C-RAN, 5G New C-RAN and 5G Cloud-RAN?
9.3 How can the data rate requirements in fronthaul be reduced by cleverly dividing the RAN functions?
9.4 What are the deployment options for the coexistence of LTE and 5G?
9.5 Give examples of user and control plane functions in 5G networks and their tasks.
9.6 What does "Flexible Numerology" mean in 5G and why is it necessary?
9.7 What technologies enable the high data rates of 5G?
9.8 How does mobility management differ in NSA and SA architectures?

References and further reading

[9.1] A. Morgado, K. Huq, S. Mumtaz, and J. Rodriguez, A survey of 5G technologies: regulatory, standardization and industrial perspectives. Elsevier Digital Communications and Networks 4, 87–97, 2018. https://doi.org/10.1016/j.dcan.2017.09.010

[9.2] P. Khatri, *5G Technology Tutorial*, Asia Pacific Regional Internet Conference on Operational Technologies (APRICOT), 2019. https://www.slideshare.net/apnic/5g-technology-tutorial

[9.3] Federal Network Agency, Federal Network Agency submits final draft for 5G frequency auction. https://www.bundesnetzagentur.de/SharedDocs/Pressemitteilungen/DE/2018/20181116_5G.html (accessed 06.01.2019)

[9.4] T. Cagenius, A. Ryde, J. Vikberg, P. Willars, Simplifying the 5G ecosystem by reducing architecture options, Ericsson Technology Review, 2018. https://www.ericsson.com/en/reports-and-papers/ericsson-technology-review/articles/simplifying-the-5g-ecosystem-by-reducing-architecture-options

[9.5] R. Pathak, 5G Core Network Architecture - A Beginners Guide. https://www.rajarshipathak.com/2020/01/beginners-guide-for-5g-core-network-architecture.html (abgerufen 18.01.2020)

[9.6] Martin Sauter, Grundkurs Mobile Kommunikationssysteme, 8th edition, Springer 2022. https://doi.org/10.1007/978-3-658-36963-7