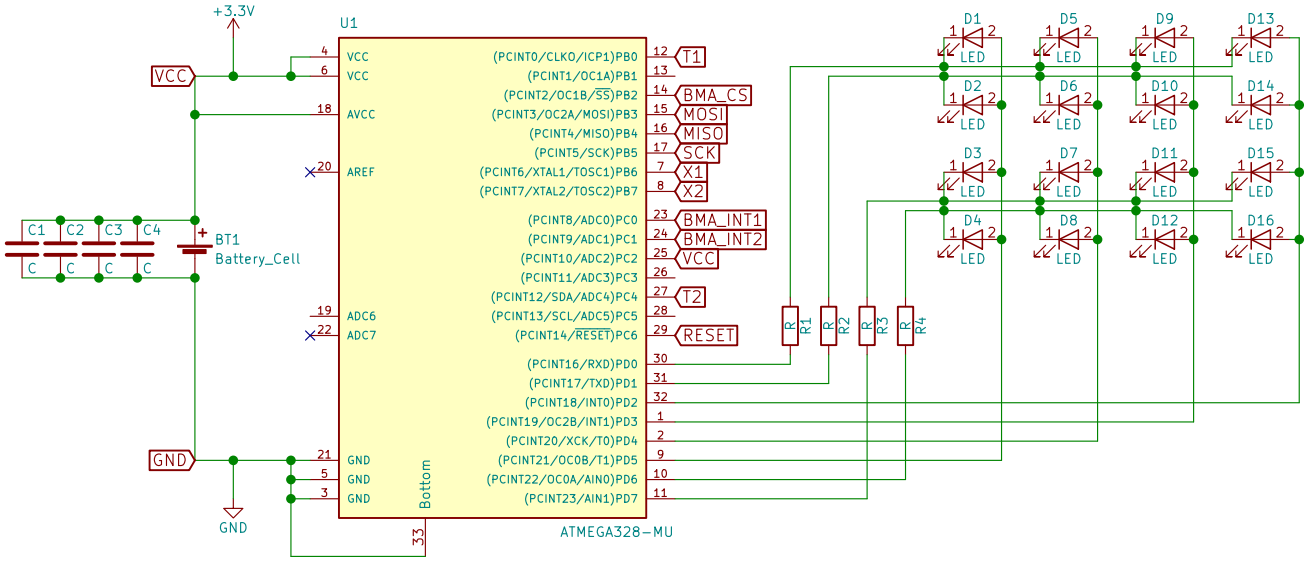

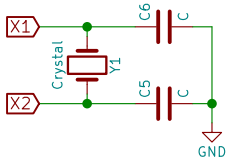

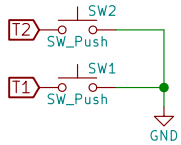

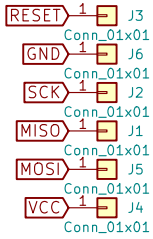

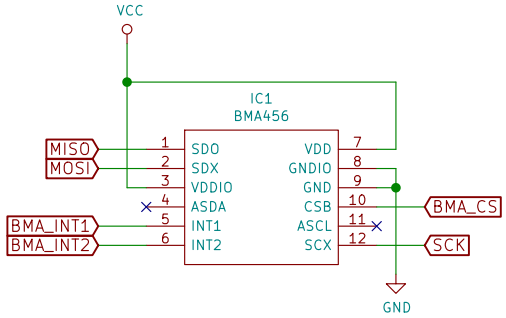

Sheet: /
File: Watch.sch

Title: BCD Wrist Watch

Size: A4	Date: 2018-08-26	**Rev: 2**
KiCad E.D.A. kicad 5.1.4		Id: 1/1