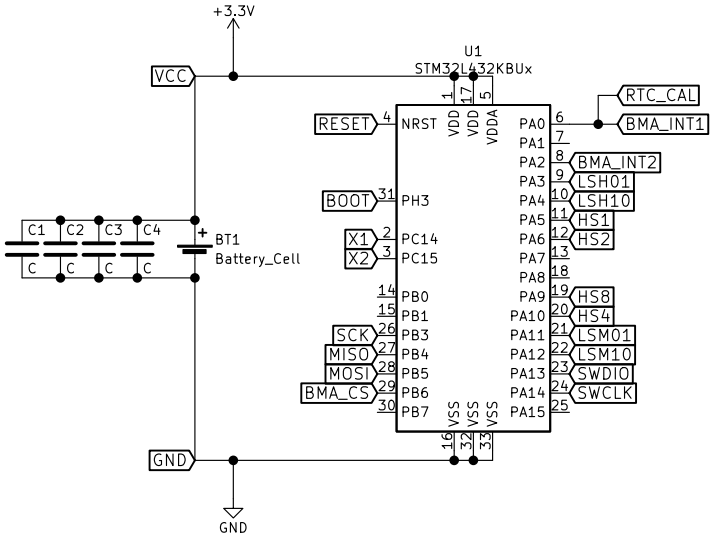

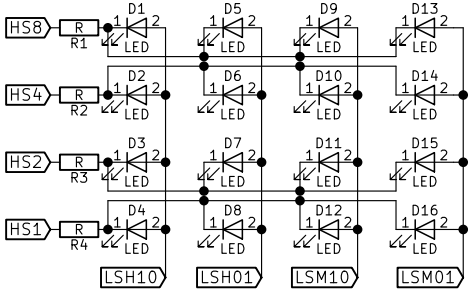

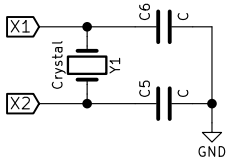

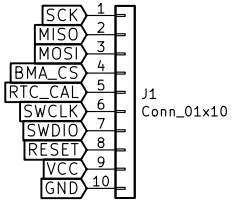

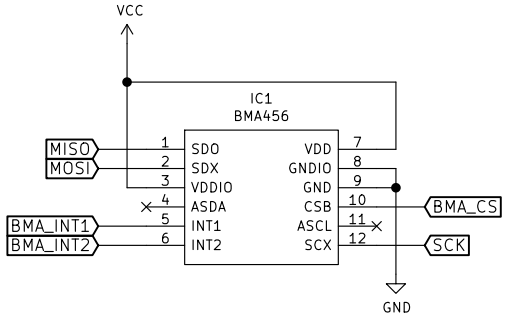

Sheet: /
File: Watch.sch

Title: BCD Wrist Watch STM32

Size: A4	Date: 2020-07-17	**Rev: 2**
KiCad E.D.A. kicad 5.1.6		Id: 1/1