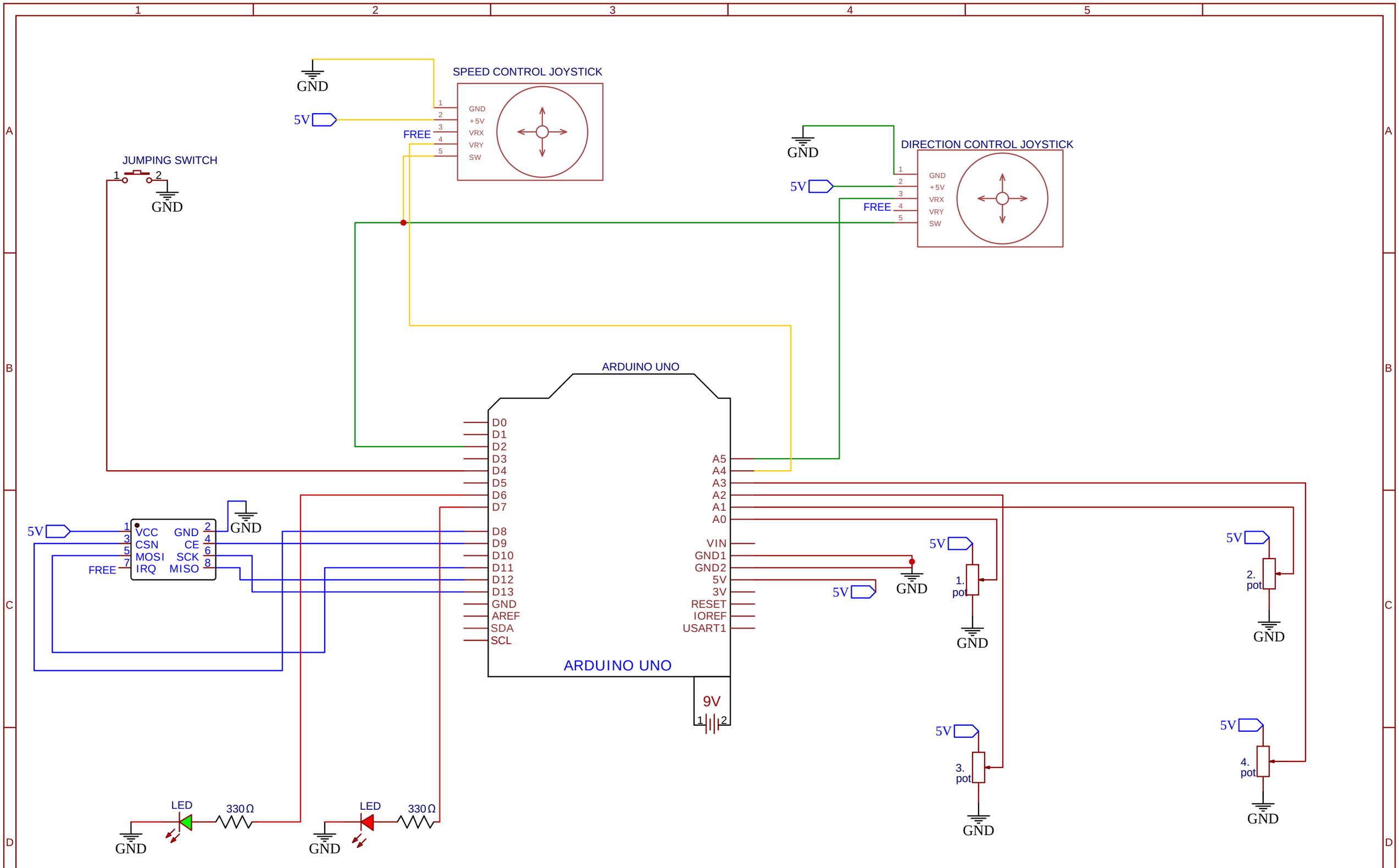

The labels shown with 5V go to the 5V pin of Arduino Uno.

The labels shown with GND go to the GND pin of Arduino Uno.

TITLE: TX_TRANSMITTER	REV: 1.0
Company: LOWRIDERS	Sheet: 1/1
Date: 2024-01-01	Drawn By: SULTAN ETYEMEZ