Debounce logic

- Design a 10-bit FPGA-based manual counter using Verilog.
- The system shall support increment, decrement, and load operations through push buttons.
- A 10-bit slide switch input shall provide the load value. Whenever the load button is pressed, the counter must load the switch value immediately.
- When the increment or decrement button is pressed, the counter must change by one. The counter range is 0 to 1023 with wrap-around. Proper button synchronization and debouncing must be used for operation with a 100 MHz clock.

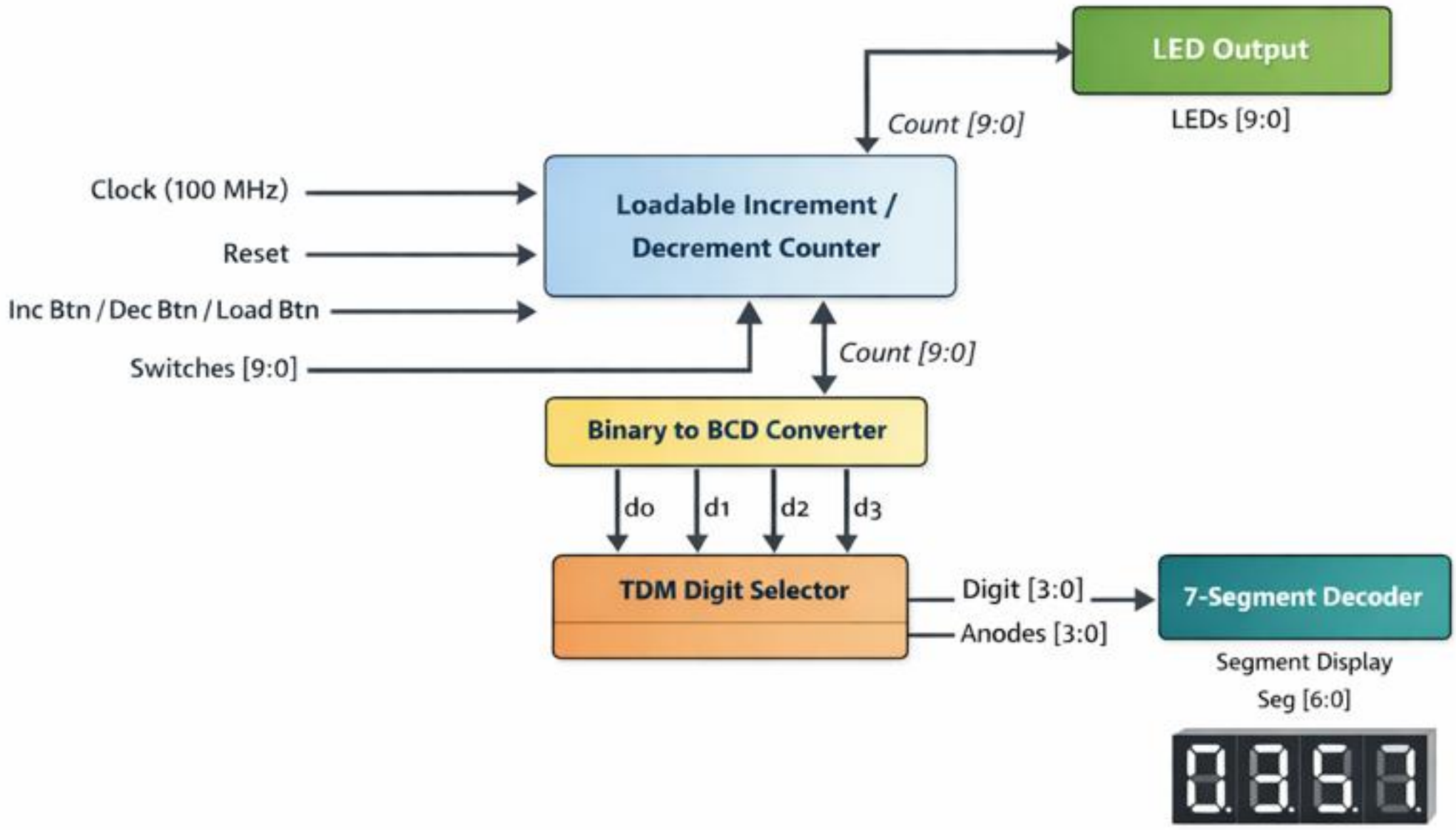
LED Output
LEDs [9:0]
Count [9:0]
Clock (100 MHz)
Reset
Inc Btn / Dec Btn / Load Btn
Switches [9:0]
Loadable Increment / Decrement Counter
Count [9:0]
Binary to BCD Converter
do
d1
d2
d3
TDM Digit Selector
Digit [3:0]
Anodes [3:0]
7-Segment Decoder
Segment Display
Seg [6:0]

Use a simple counter:

- BTN_U = increment
- BTN_D = decrement

```
if (btn_inc)
    count <= count + 1;
else if (btn_dec)
    count <= count - 1;
```

Build a small system with:

- **Pushbutton 1** → increment
- **Pushbutton 2** → decrement

- one press causing **multiple increments**
- one press causing **multiple decrements**

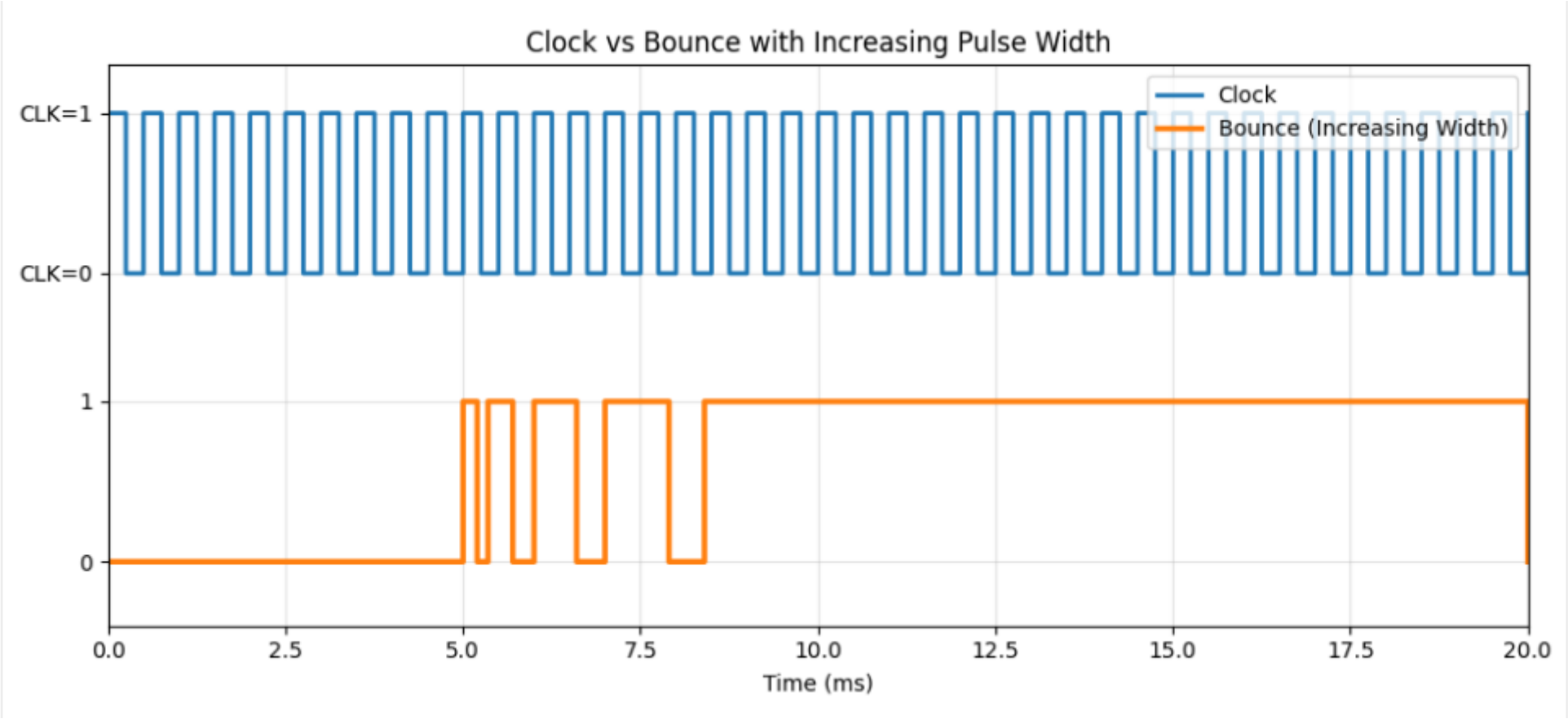
Clock vs Bounce with Increasing Pulse Width
Clock
Bounce (Increasing Width)
CLK=1
CLK=0
1
0
0.0
2.5
5.0
7.5
10.0
12.5
15.0
17.5
20.0
Time (ms)

key intuition

A pushbutton is a **mechanical device**.

When pressed, the contacts do not go cleanly from `0` to `1` once.

Instead, due to mechanical vibration, the signal may look like:

```
0 -> 1 -> 0 -> 1 -> 0 -> 1 -> 1
```

all within a very short time.

Similarly during release:

```
1 -> 0 -> 1 -> 0 -> 0
```

So to the FPGA, one press may look like **many presses**.

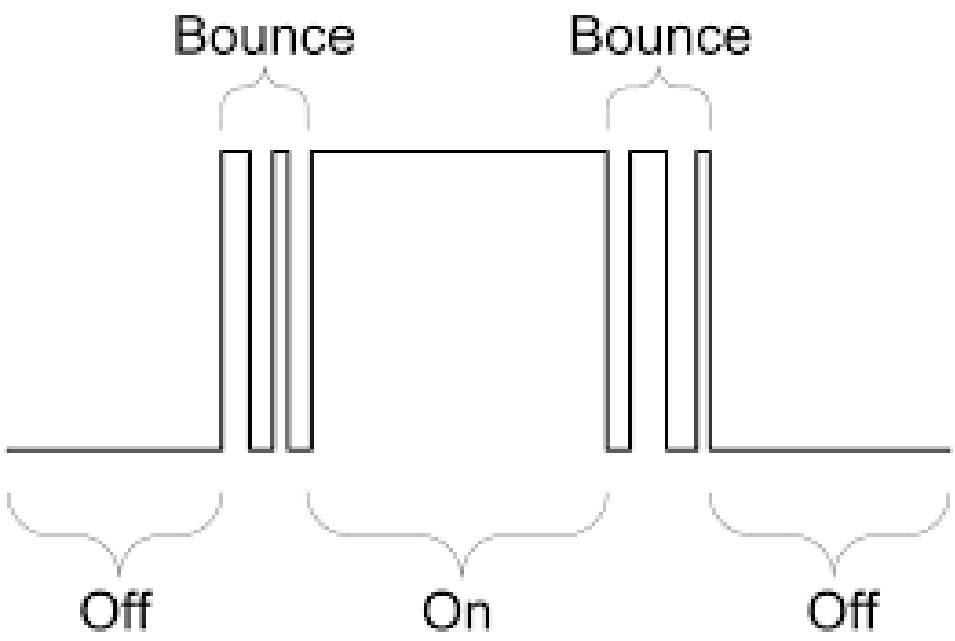

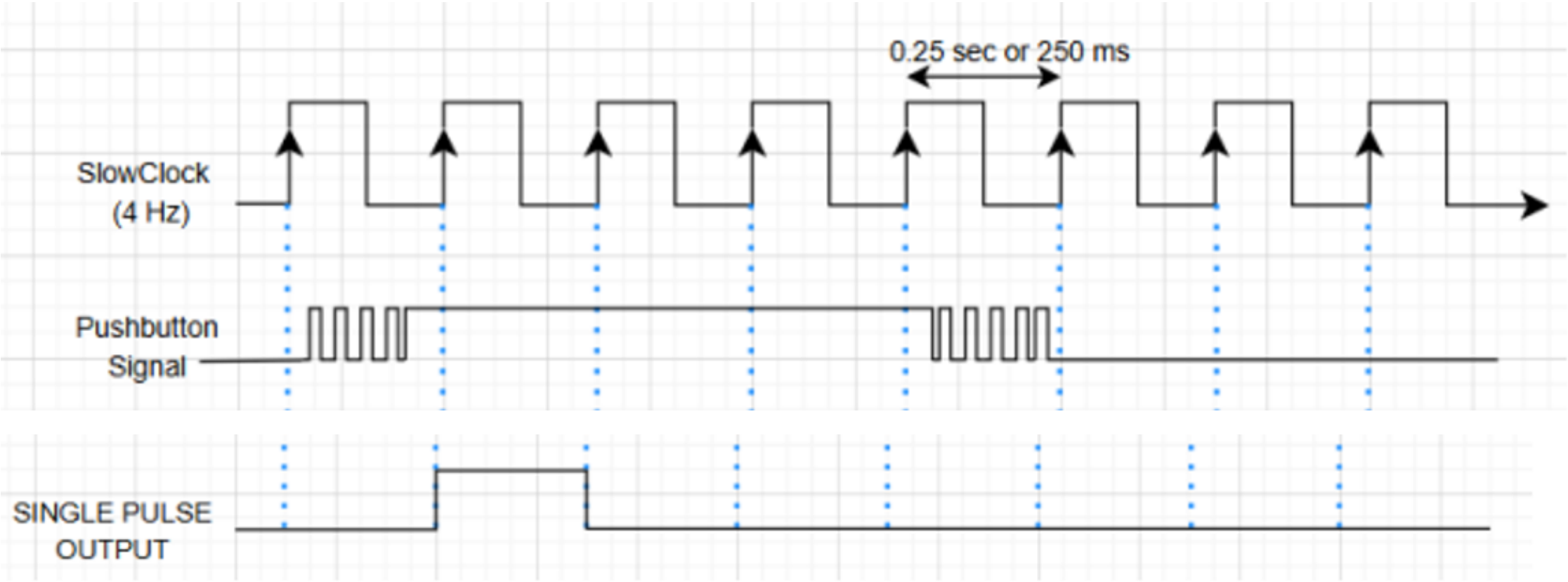
0.25 sec or 250 ms
SlowClock
(4 Hz)
Pushbutton
Signal
SINGLE PULSE
OUTPUT

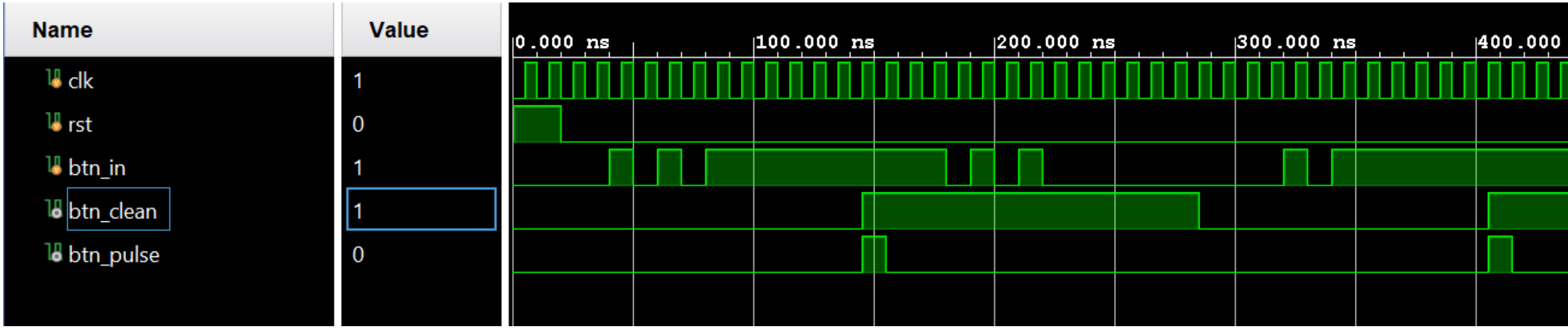
Name
Value
clk
1
rst
0
btn_in
1
btn_clean
1
btn_pulse
0
0.000 ns
100.000 ns
200.000 ns
300.000 ns
400.000