Rice Robotics R-OWL-vers; Rice University; Houston, TX, United States;
Ryan Purdy: rpp6@rice.edu; Winson Lin: wl85@rice.edu

Team Structure

Rice Robotics R-OWL-vers is made up of 3 discipline-based teams composed mainly of electrical, mechanical, and software engineers. Each team is developing 3 major subsystems. Each subsystem is overseen by a team lead who sets objectives for their sub-team and communicates with other team leads. The URC project as a whole is led by the Chief Hardware and Software Engineers who advise on rover design and facilitate integration between subsystems (**Figure 1**). Kaiyu Hang acts as the Faculty Advisor for the team, and Rice Robotics Club Co-Presidents organize fundraising and provide administrative support.

Training and Outreach

As a first-year URC competitor, one major focus has been recruiting and training new members by providing opportunities to learn robotics fundamentals and develop key software and fabrication skills. For example, our RRC Robo-Tutorial is an asynchronous tutorial program which provides members the opportunity to design, build, and control their own robot arm while establishing a knowledge baseline for all members. Team leads provide further instruction and resources to develop more specialized knowledge and skills for their respective subteams.

Team Resources

The Rice Robotics Club has secured funding from the schools of Mechanical Engineering, Computer Science, and Electrical Engineering and has received additional support from other engineering-oriented organizations. This funding is sufficient to cover our anticipated costs for the rover project (**Figure 3**). All purchases must be approved by a club officer, and a record of approved purchases is kept in a budget spreadsheet that tracks all expenditures and sources of income. The Oshman Engineering Design Kitchen provides us with free access to manufacturing tools (3D printers, 2D cutters, CNC), basic prototyping materials, and storage and meeting spaces.

Project Management

Over the course of the year, each subsystem will progress through 3 major phases: research, independent development, and integration with other relevant subsystems. We plan to complete the independent development of each subsystem by the end of February 2026, then proceed with integration and testing as outlined in the Gantt chart (**Figure 2**). Document sharing is facilitated through OnShape for CAD, GitHub for code, and Google Drive for all other documents. Meeting times, project updates, and other announcements are communicated through Slack.

Mechanical Design Overview

The rover utilizes a rocker-bogie suspension system to enable flexible navigation of obstacles and rough terrain. The suspension's 6 wheels are 3D printed and driven by DC planetary gear motors that satisfy torque requirements based on anticipated rover weight and terrain conditions. The suspension consists of 20 mm extrusion links, and the rover body consists of aluminum panels attached to a frame constructed from 20 mm extrusion (**Figure 4**).

Sample collection is facilitated by a sheathed auger mechanism that functions as an Archimedes screw, funneling soil upwards along the auger's thread and ejecting it at the top of the sheath. This system allows for samples to be collected from depths up to 20 centimeters, ensuring we can selectively collect and store a 5g sample from below 10 cm. The auger is rotated by a DC planetary gear motor, and the sample collection system is moved vertically using a lead screw and a stepper motor. By raising the sheathed auger to different heights, the collected sample can be ejected, stored in a cache, or delivered to the science module for analysis (**Figure 5**).

The robotic manipulator consists of a linear slide for horizontal translation across the rover and a double parallelogram counterbalance mechanism with RobStride 02 motors at the shoulder and elbow joints. This configuration provides the necessary torque to lift up to 5.5 kg with motors operating at rated torque. The parallelogram links maintain the end effector's orientation parallel to the ground, simplifying control of the manipulator (**Figure 7**). The end effector is a simple 1 dof gripper operated by a servo that can be easily attached and detached from the manipulator. Alternative end effector designs will be developed that are specialized for specific competition missions (**Figure 6**).

Electrical & Computational Design Overview

Our rover's autonomy stack runs ROS 2 on an NVIDIA Jetson Orin Nano. Core behaviors are developed first in Gazebo Harmonic and visualized in RViz, then deployed to identical ROS 2 nodes on the physical rover using ros_gz_bridge for continuity between simulation and hardware. The Jetson coordinates navigation, perception, arm control, and communications, while microcontrollers handle low-level motor and actuator interfaces.

The electrical system is designed for at least one hour of continuous operation, including drivetrain, arm, science payload, radios, and compute. COTS 10 V 10 Ah DeWalt battery packs are combined into a 40 V high-power bus and a regulated 20 V low-power bus. A two-board PCBA handles distribution: the high-power board routes 40 V to the wheel motor drivers through relays and breakers, and the low-power board has routing and buck-converters to convert 20 V to 12 V, 5 V, and 3.3 V rails. Fuses, current sensing, and an E-stop provide staged protection for motors and electronics. The overall power and compute architecture is summarized in **Figure 9**.

Four planetary gear motors with encoder feedback drive the wheels through BTS7960 H-bridge drivers. The arm uses RobStride smart actuators on a CAN bus for position-controlled joints, commanded by MoveIt 2 running on the Jetson. A representative MoveIt Task Constructor pipeline for arm manipulation is shown in **Figure 11**. Perception combines three AR0234 surround cameras and an Intel RealSense D435i on the arm with Nav2 for path planning, ArUco detection for posts and keyboard alignment, and a YOLOv8 model for tool detection (**Figure 10**).

A long-range 900 MHz RF link carries commands, telemetry, and compressed data, with a 2.4 GHz channel planned for higher-bandwidth video. Custom packets with CRC16 support multiple payload types (drive commands, arm goals, status, and images). System startup proceeds in stages—power, RF, mobility, arm, then science—with E-stop and current-monitor checks at each step.

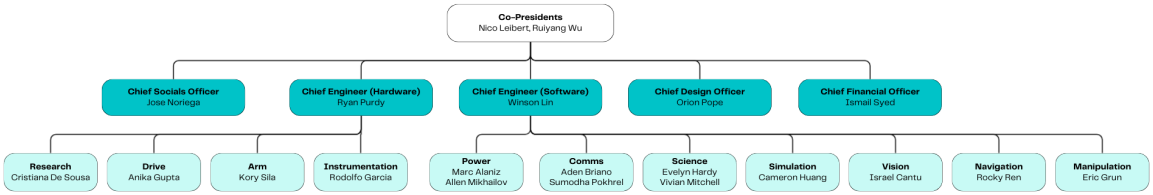

Figure 1. Team Organization

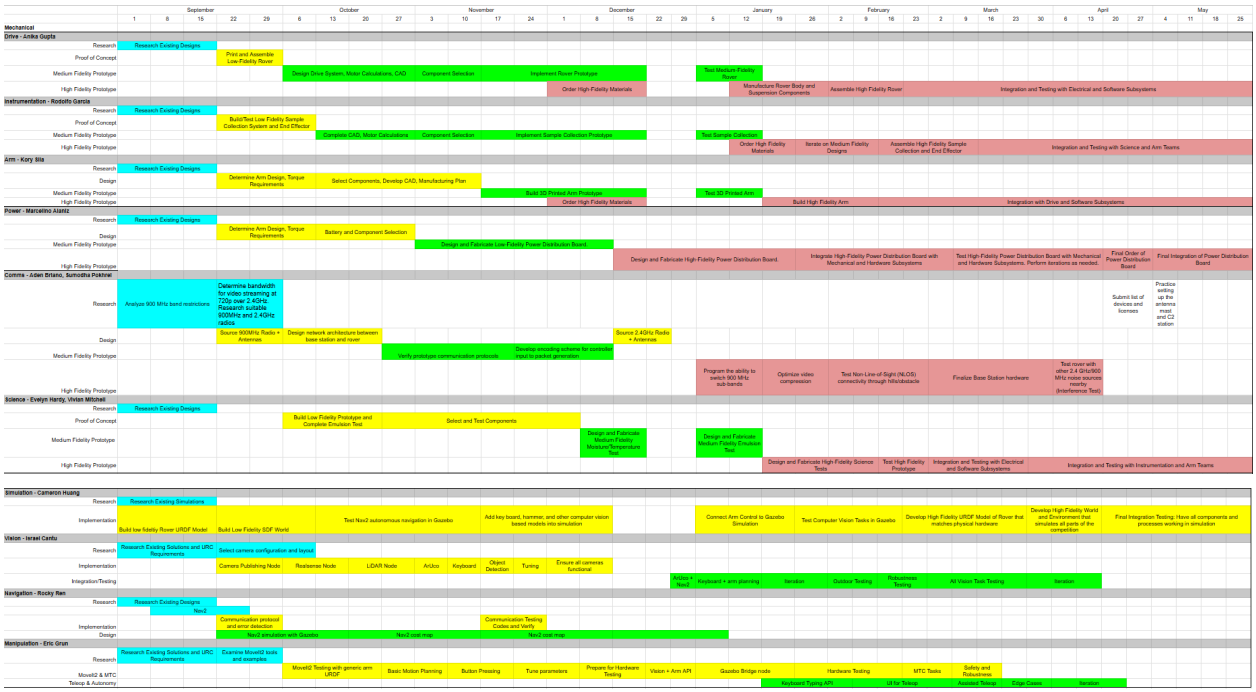

Figure 2. Gantt Chart

Rice Robotics Rover : URC PDR BUDGET

As of Dec 01, 2025

Description	Amount
INCOME	
Actual Income to Date	
Carryover Cash from Prior Year	$3,000
Engineering School (RESC)	$2,000
Anonymous	$340
Mechanical Engineering	$1,000
Computer Science	$2,000
Ken Kennedy Institute	$1,000
MathWorks	$1,000
Total Income Received to Date	$10,340
Anticipated Income	
Electrical Engineering (anticipated)	$500
OEDK (anticipated)	$500
Additional MathWorks Support (anticipated)	$500
Total Additional Income Anticipated	$1,500
TOTAL INCOME	$11,840
EXPENSES	
Project Expense Categories	
Rover Chassis	$1,750
Rover Arm System	$1,925
Electrical System	$350
Communications System	$880
Science System	$1,310
Administrative (website, outreach)	$200
Facilities (storage, tools, etc.)	$0
URC Rover Transportation	$0
URC Travel Expenses	$2,000
TOTAL EXPENSES	$8,415
FORECAST FUNDING SURPLUS/DEFICIT	$3,425

Figure 3. Budget Table

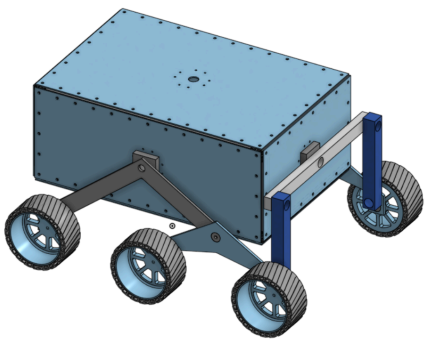

Figure 4. Simplified CAD mockup of rover body, suspension, and wheels. Rover is supported by a rocker-bogie suspension system and driven by 3D-printed wheels with DC planetary gear motors.

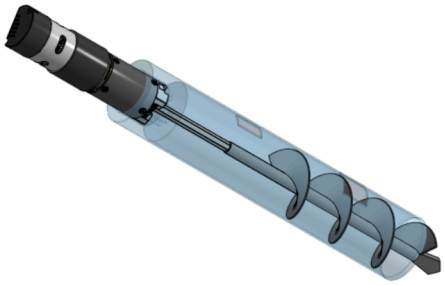

Figure 5. CAD assembly of sample collection mechanism. Sheathed auger is used for sample collection and selective storage. Auger is rotated by DC planetary gear motor, and full system is moved vertically using a stepper motor and lead screw.

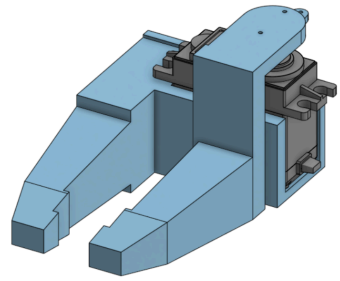

Figure 6. CAD model for low fidelity end effector prototype. Simple gripping mechanism should be sufficient for most tasks during Extreme Delivery and Equipment Servicing missions.

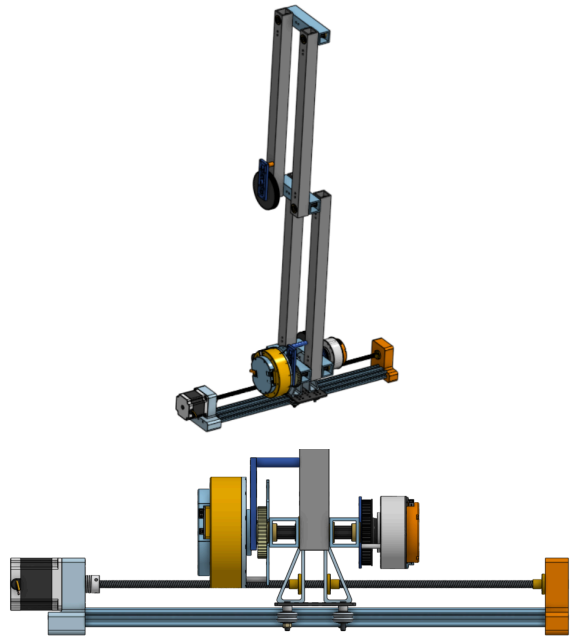

Figure 7. Full and section views of robot arm CAD. Linear slide actuates horizontal translation and two revolute joints position end effector. The second revolute joint is driven via pulley to reduce required motor torque. A double parallelogram mechanism provides further mechanical advantage.

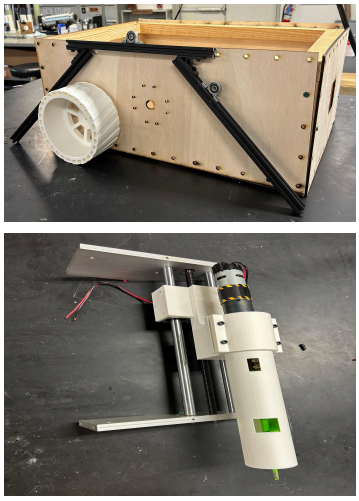

Figure 8. Drive system and sample collection medium fidelity prototypes are being developed and will be completed by the end of December.

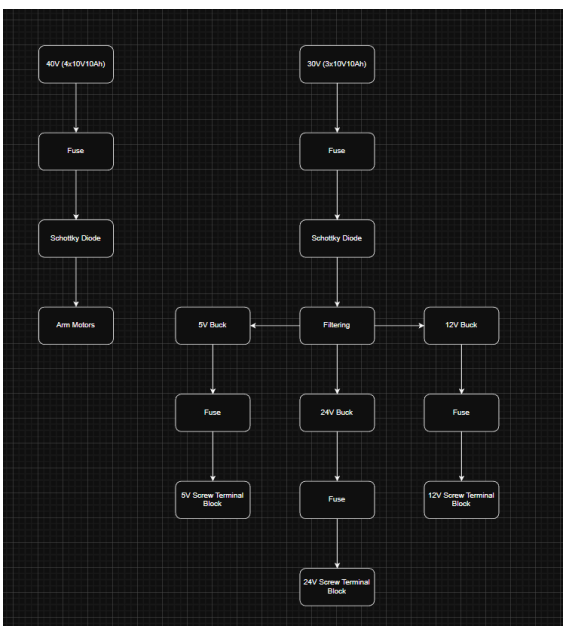

Figure 9. Electrical and computation architecture. DeWalt battery packs feed a 48 V high-power bus for the drivetrain and a regulated 24 V low-power bus for compute and peripherals. A two-board PCBA provides relays, breakers, and fuses, while the Jetson Orin Nano, RF radios, and microcontrollers interface with wheel motor drivers and CAN-connected arm actuators.

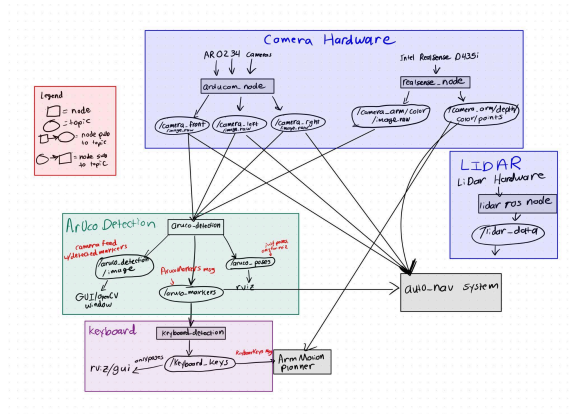

Figure 10. Perception and autonomy ROS 2 graph. AR0234 surround cameras and the arm-mounted RealSense D435i publish image topics (/camera_front/…, /camera_left/…, /camera_right/…, /camera_arm/…), and the LiDAR node publishes /lidar_data. ArUco, keyboard, and YOLOv8 object-detection nodes subscribe to these streams and output marker and object poses, which are fed to Nav2 for autonomous driving and MoveIt 2 for arm motion planning.

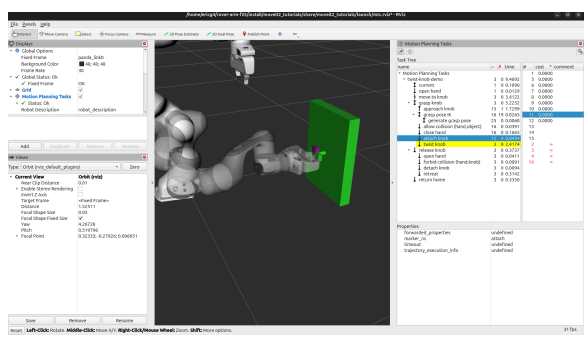

Figure 11. Arm manipulation in RViz using MoveIt Task Constructor. A multi-step pipeline (approach, grasp or key-press, optional twist, retreat) is planned with collision checking and executed on the CAN-connected actuators. Operators choose high-level tasks (e.g., “twist knob,” “press key”), while trajectory generation and execution are handled autonomously.