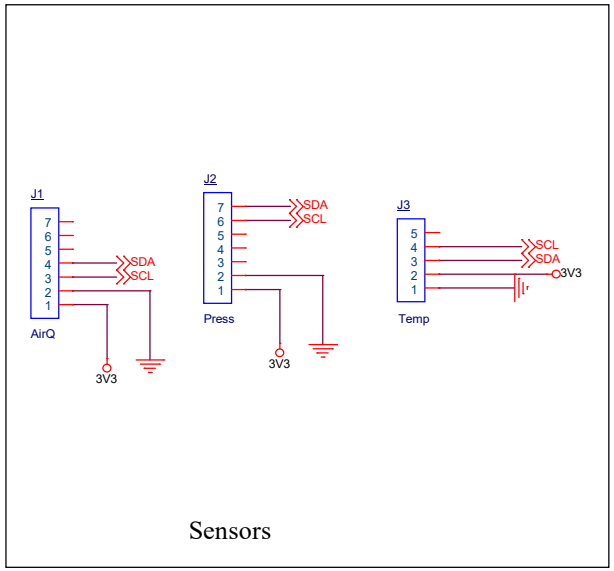

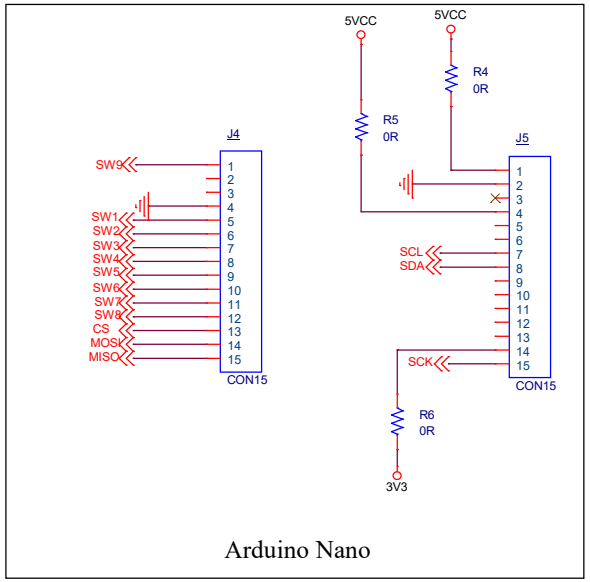

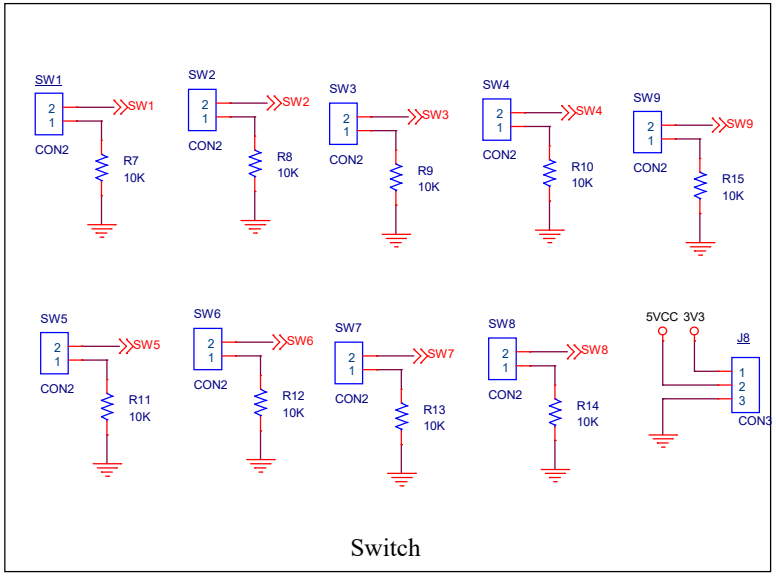

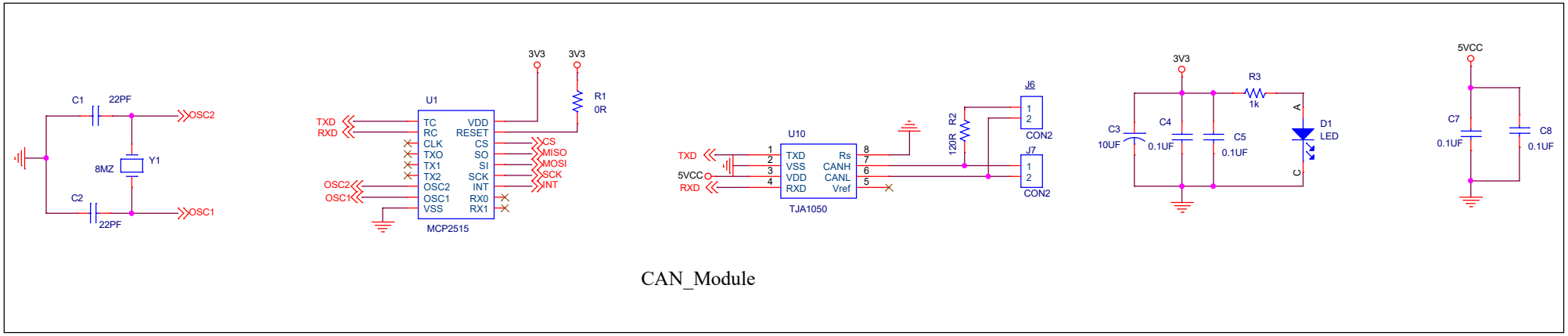

Accelerometer		
Title <Title>		
Size B	Document Number <Doc>	Rev <RevCode>
Date: Wednesday, June 02, 2021	Sheet 1 of 1	