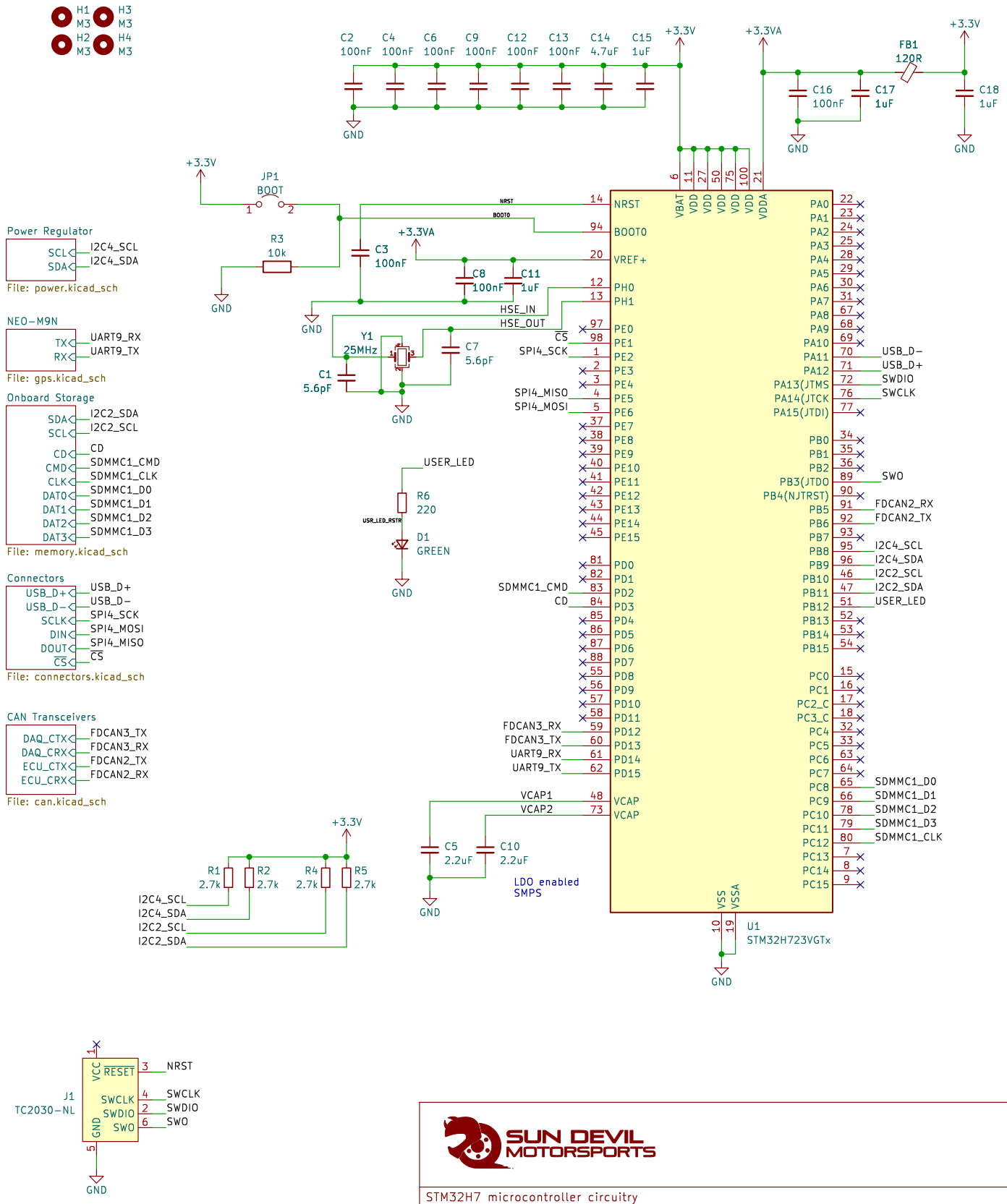
H1 M3
H2 M3
H3 M3
H4 M3
C2 100nF
C4 100nF
C6 100nF
C9 100nF
C12 100nF
C13 100nF
C14 4.7uF
C15 1uF
+3.3V
GND
+3.3VA
FB1 120R
C16 100nF
C17 1uF
C18 1uF
JP1 BOOT
R3 10k
C3 100nF
C8 100nF
C11 1uF
Y1 25MHz
C1 5.6pF
C7 5.6pF
HSE_IN
HSE_OUT
NRST
BOOT0
VREF+
PH0
PH1
CS
SPI4_SCK
SPI4_MISO
SPI4_MOSI
USER_LED
R6 220
USR_LED_RSTR
D1 GREEN
SDMMC1_CMD
CD
FDCAN3_RX
FDCAN3_TX
UART9_RX
UART9_TX
VCAP1
VCAP2
C5 2.2uF
C10 2.2uF
LDO enabled
SMPS
R1 2.7k
R2 2.7k
R4 2.7k
R5 2.7k
I2C4_SCL
I2C4_SDA
I2C2_SCL
I2C2_SDA
VBAT
VDD
VDDA
VSS
VSSA
U1
STM32H723VGTx
PA11
PA12
PA13(JTMS
PA14(JTCK
PA15(JTDI)
PB3(JTDO
PB4(NJTRST)
USB_D−
USB_D+
SWDIO
SWCLK
SWO
FDCAN2_RX
FDCAN2_TX
SDMMC1_D0
SDMMC1_D1
SDMMC1_D2
SDMMC1_D3
SDMMC1_CLK
Power Regulator
SCL
SDA
File: power.kicad_sch
NEO−M9N
TX
RX
File: gps.kicad_sch
Onboard Storage
CD
CMD
CLK
DAT0
DAT1
DAT2
DAT3
File: memory.kicad_sch
Connectors
DIN
DOUT
CS
File: connectors.kicad_sch
CAN Transceivers
DAQ_CTX
DAQ_CRX
ECU_CTX
ECU_CRX
File: can.kicad_sch
J1
TC2030−NL
RESET
SWCLK
SWDIO
SWO
SUN DEVIL MOTORSPORTS
STM32H7 microcontroller circuitry
Sheet: /
Title: SDM−24 Data Logger
Size: USLetter
Date: 2023−12−03
Rev: v3
KiCad E.D.A. kicad 7.0.8
Id: 1/6

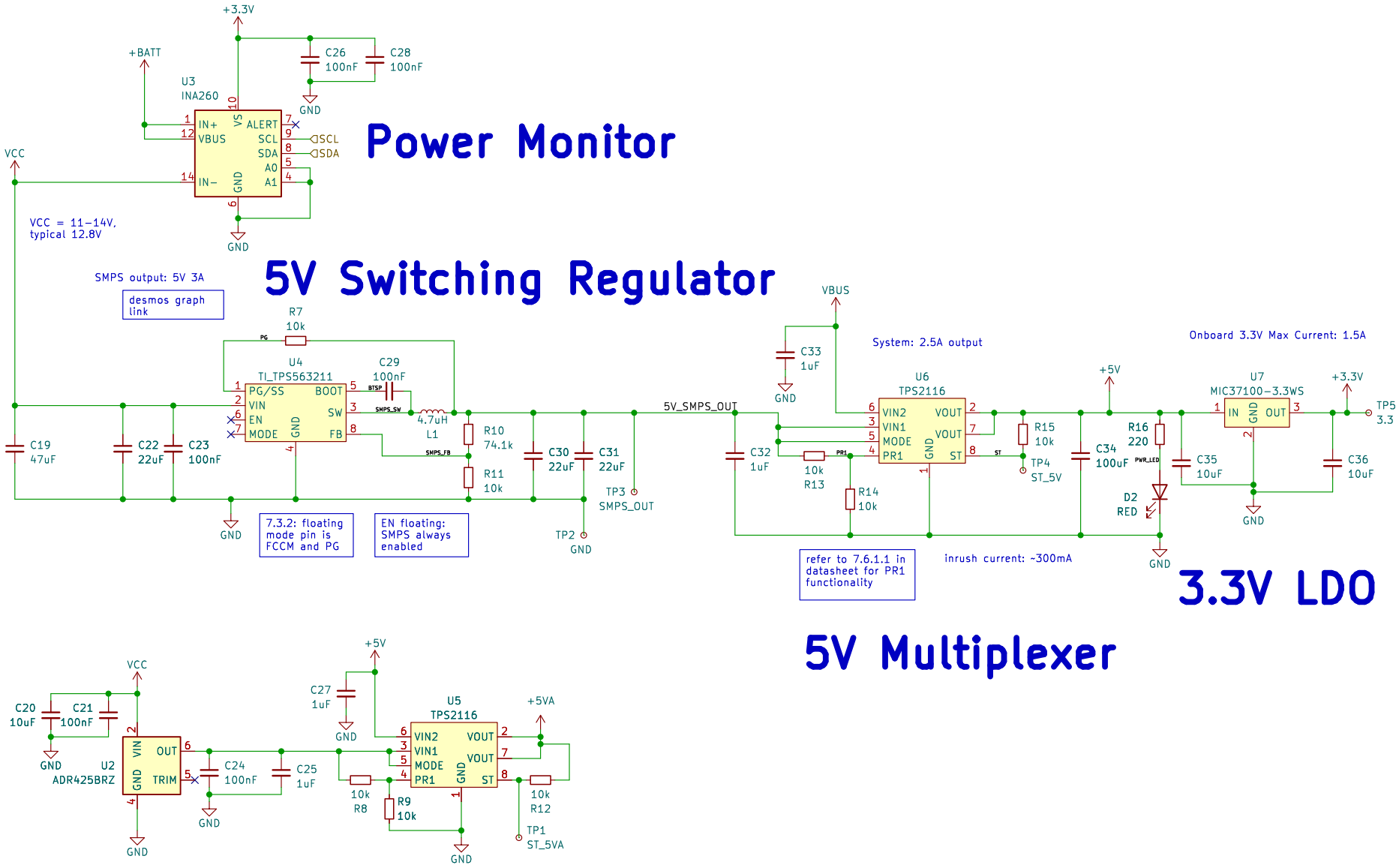
Power Monitor
+3.3V
+BATT
U3
INA260
C26
100nF
C28
100nF
GND
VCC
IN+
VBUS
IN−
VS
GND
ALERT
SCL
SDA
A0
A1
SCL
SDA
VCC = 11−14V,
typical 12.8V
5V Switching Regulator
SMPS output: 5V 3A
desmos graph
link
R7
10k
PG
U4
TI_TPS563211
C29
100nF
BTSP
PG/SS
VIN
EN
MODE
BOOT
SW
FB
SMPS_SW
4.7uH
L1
SMPS_FB
R10
74.1k
R11
10k
C19
47uF
C22
22uF
C23
100nF
C30
22uF
C31
22uF
TP3
SMPS_OUT
TP2
7.3.2: floating
mode pin is
FCCM and PG
EN floating:
SMPS always
enabled
5V_SMPS_OUT
VBUS
C33
1uF
System: 2.5A output
U6
TPS2116
VIN2
VIN1
MODE
PR1
VOUT
VOUT
ST
C32
1uF
10k
R13
R14
10k
R15
10k
TP4
ST_5V
+5V
C34
100uF
R16
220
PWR_LED
D2
RED
Onboard 3.3V Max Current: 1.5A
U7
MIC37100−3.3WS
IN
GND
OUT
+3.3V
TP5
3.3
C35
10uF
C36
10uF
refer to 7.6.1.1 in
datasheet for PR1
functionality
inrush current: ~300mA
3.3V LDO
5V Multiplexer
VCC
C20
10uF
C21
100nF
U2
ADR425BRZ
VIN
GND
OUT
TRIM
C24
100nF
C25
1uF
+5V
C27
1uF
U5
TPS2116
10k
R8
R9
10k
+5VA
10k
R12
TP1
ST_5VA
5V Analog
Multiplexer
SUN DEVIL
MOTORSPORTS
System and onboard power regulators
Sheet: /Power Regulator/
Title: SDM−24 Data Logger
Size: USLetter
Date: 2023−12−03
Rev: v3
KiCad E.D.A. kicad 7.0.8
Id: 2/6

NEO-M9N GPS Module

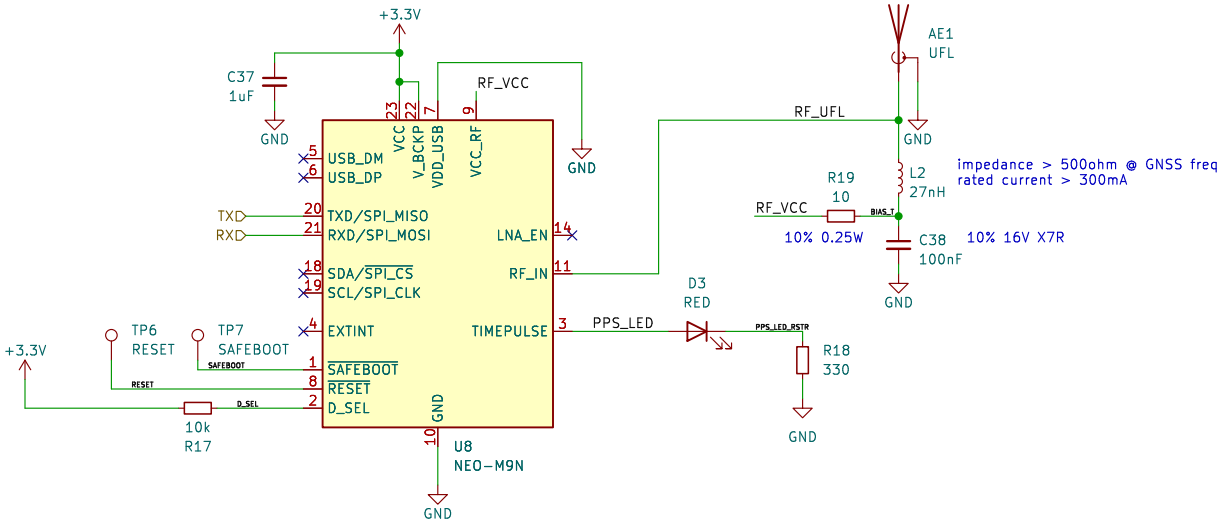

SUN DEVIL MOTORSPORTS

GPS and antenna circuitry
Sheet: /NEO-M9N/

Title: SDM-24 Data Logger

Size: USLetter	Date: 2023-12-03	**Rev: v3**
KiCad E.D.A. kicad 7.0.8		Id: 3/6

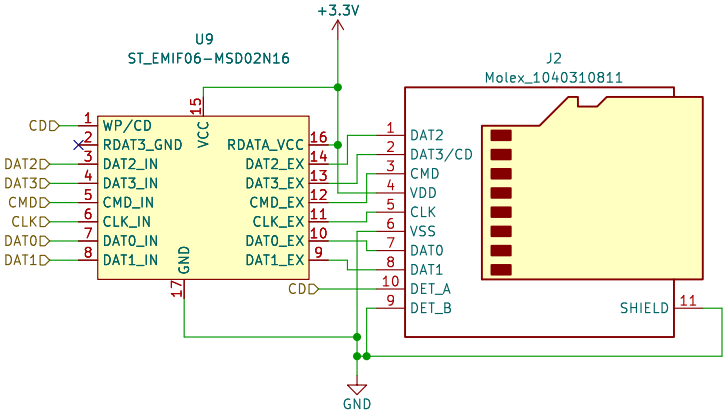

uSD Card

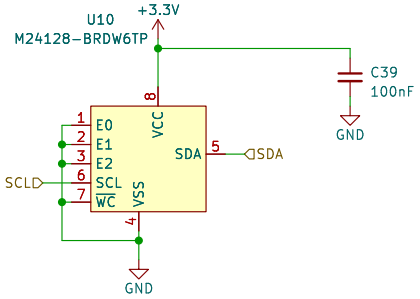

EEPROM

SUN DEVIL MOTORSPORTS

SD card and EEPROM circuitry
Sheet: /Onboard Storage/

Title: SDM-24 Data Logger

Size: A4	Date: 2023-12-03	**Rev: v3**
KiCad E.D.A. kicad 7.0.8		Id: 4/6

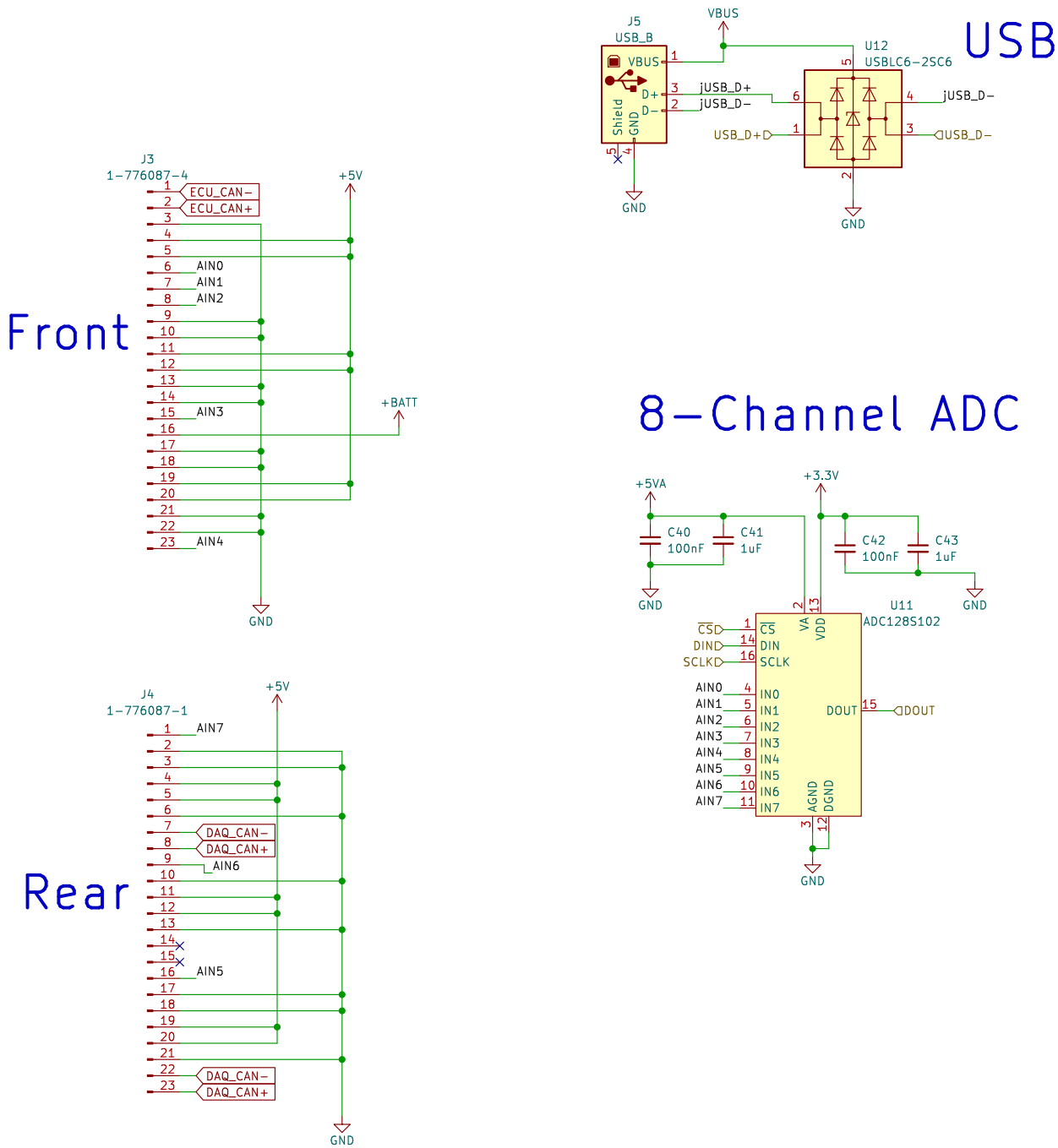

SUN DEVIL MOTORSPORTS

Connectors
Sheet: /Connectors/

Title: SDM-24 Data Logger

Size: USLetter	Date: 2023-12-03	**Rev: v3**
KiCad E.D.A. kicad 7.0.8		Id: 5/6

CAN Transceivers

ECU Bus

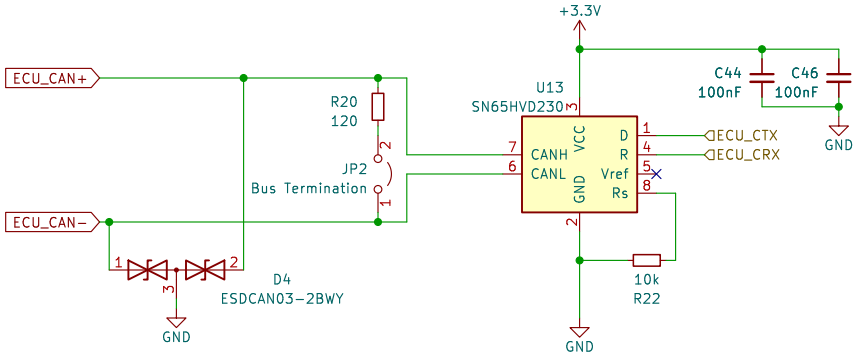

DAQ Bus

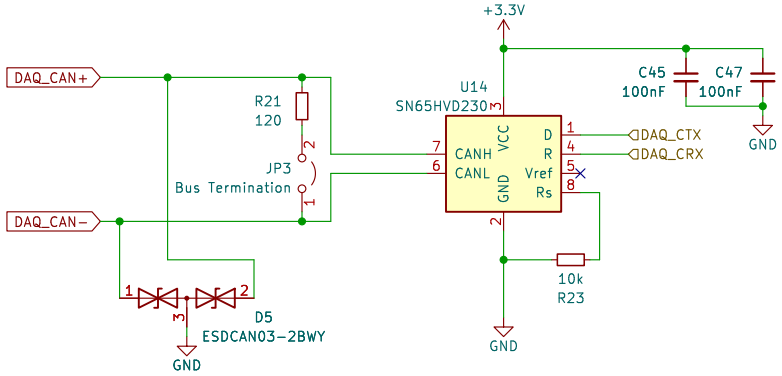

SUN DEVIL MOTORSPORTS

CAN transceivers circuitry
Sheet: /CAN Transceivers/

Title: SDM-24 Data Logger

Size: USLetter	Date: 2023-12-03	**Rev: v3**
KiCad E.D.A. kicad 7.0.8		Id: 6/6