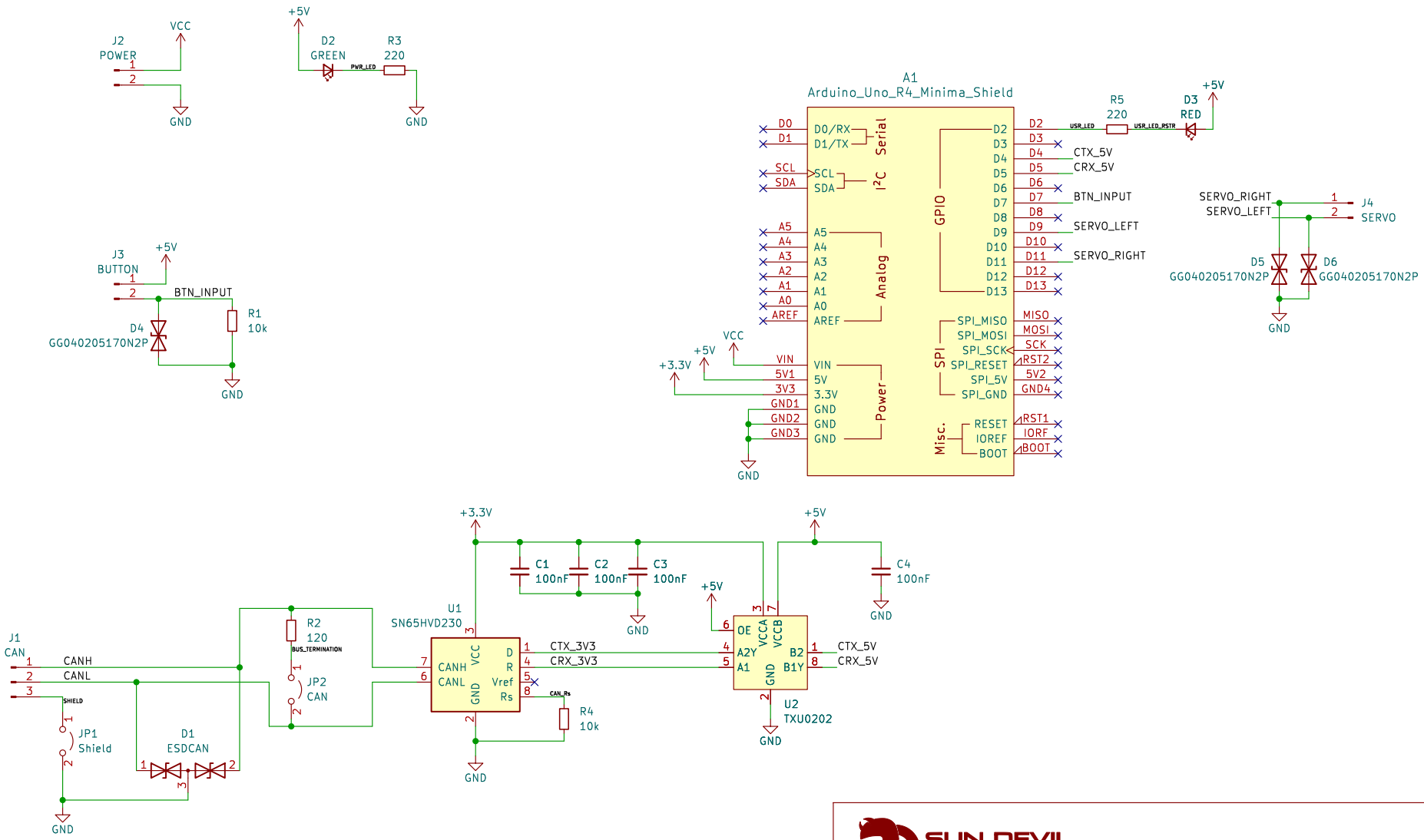

SUN DEVIL MOTORSPORTS

Sheet: /

Title: DRS Control Board

Size: USLetter	Date: 2023-11-21	Rev: v1
KiCad E.D.A. kicad 7.0.8		Id: 1/1