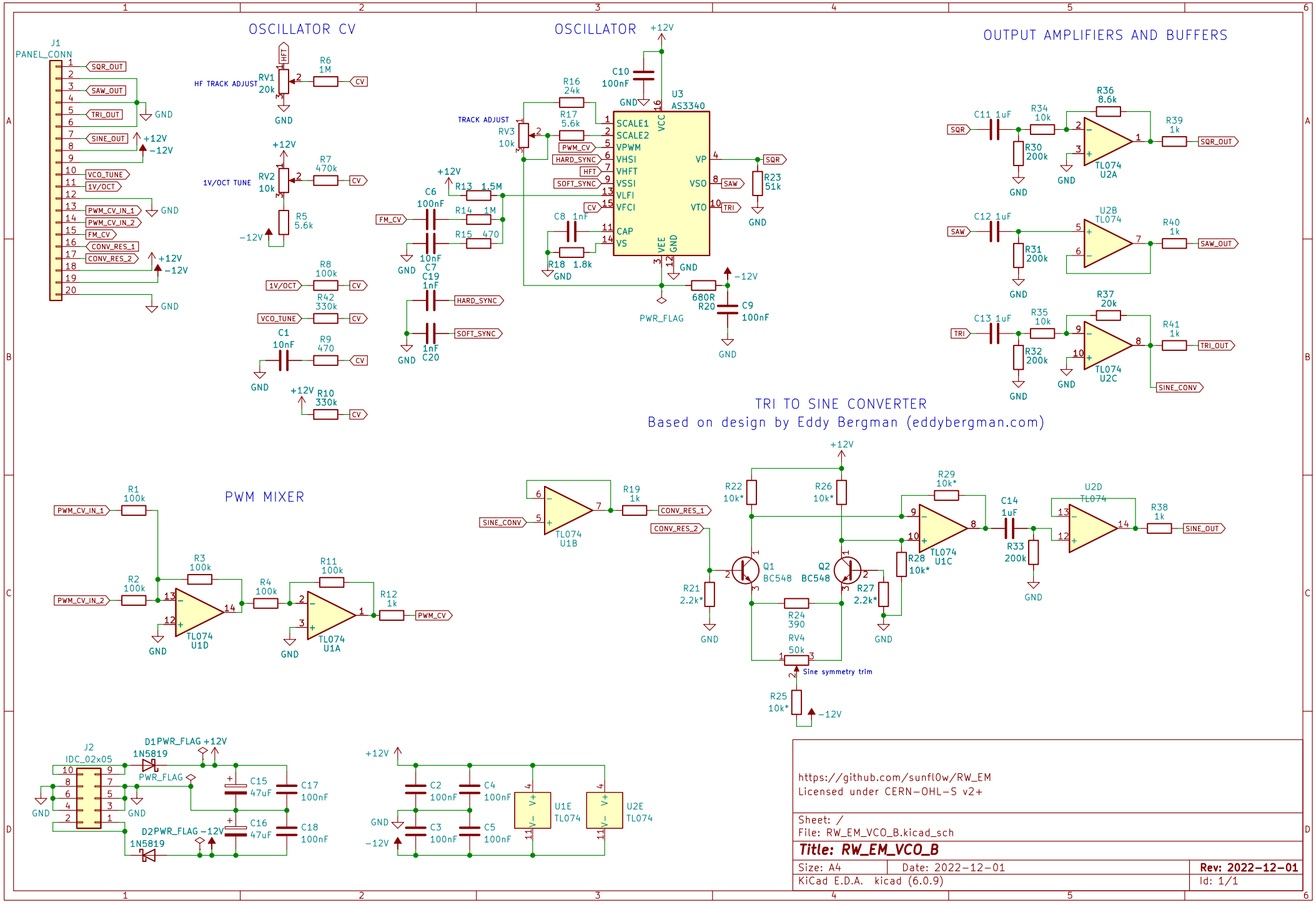
OSCILLATOR CV
OSCILLATOR
OUTPUT AMPLIFIERS AND BUFFERS
TRI TO SINE CONVERTER
Based on design by Eddy Bergman (eddybergman.com)
PWM MIXER
J1
PANEL_CONN
SQR_OUT
SAW_OUT
TRI_OUT
SINE_OUT
VCO_TUNE
1V/OCT
PWM_CV_IN_1
PWM_CV_IN_2
FM_CV
CONV_RES_1
CONV_RES_2
HF TRACK ADJUST
RV1 20k
R6 1M
1V/OCT TUNE
RV2 10k
R7 470k
R5 5.6k
R8 100k
R42 330k
C1 10nF
R9 470
R10 330k
TRACK ADJUST
RV3 10k
R16 24k
R17 5.6k
C10 100nF
U3 AS3340
SCALE1
SCALE2
VPWM
VHSI
VHFT
VSSI
VLFI
VFCI
CAP
VS
VCC
VP
VSO
VTO
VEE
GND
R23 51k
R13 1.5M
R14 1M
R15 470
C6 100nF
C7 10nF
C8 1nF
R18 1.8k
C19 1nF
C20 1nF
HARD_SYNC
SOFT_SYNC
PWM_CV
HFT
CV
SQR
SAW
TRI
PWR_FLAG
680R R20
C9 100nF
R36 8.6k
R34 10k
R30 200k
C11 1uF
R39 1k
TL074 U2A
U2B TL074
C12 1uF
R31 200k
R40 1k
R37 20k
R35 10k
R32 200k
C13 1uF
R41 1k
TL074 U2C
SINE_CONV
R1 100k
R2 100k
R3 100k
R4 100k
R11 100k
R12 1k
TL074 U1D
TL074 U1A
R19 1k
TL074 U1B
R22 10k*
R26 10k*
R29 10k*
R28 10k*
Q1 BC548
Q2 BC548
R21 2.2k*
R27 2.2k*
R24 390
RV4 50k
Sine symmetry trim
R25 10k*
C14 1uF
R33 200k
U2D TL074
R38 1k
J2
IDC_02x05
D1PWR_FLAG
1N5819
D2PWR_FLAG
C15 47uF
C16 47uF
C17 100nF
C18 100nF
C2 100nF
C3 100nF
C4 100nF
C5 100nF
U1E TL074
U2E TL074
https://github.com/sunfl0w/RW_EM
Licensed under CERN-OHL-S v2+
Sheet: /
File: RW_EM_VCO_B.kicad_sch
Title: RW_EM_VCO_B
Size: A4
Date: 2022-12-01
Rev: 2022-12-01
KiCad E.D.A. kicad (6.0.9)
Id: 1/1