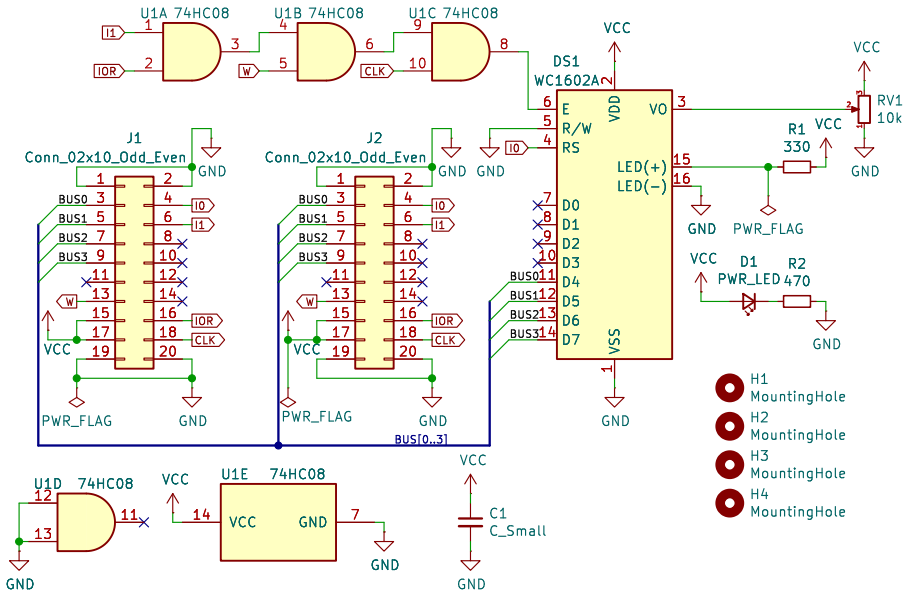

Sheet: /
File: 1602-Module.kicad_sch

Title: 1602-Module

Size: A4	Date: 2024-04-01	**Rev: 2024-04-01**
KiCad E.D.A. 8.0.1		Id: 1/1